Monitoring report form for CDM project activity

(Version 06.0)

Complete this form in accordance with the instructions attached at the end of this form.

MONITORING REPORT		
Title of the project activity	InfraVest Taiwan Wind Farms Bundled Project 2011	
UNFCCC reference number of the project activity	GS1001	
Version number of the PDD applicable to this monitoring report	Version 3	
Version number of this monitoring report	02	
Completion date of this monitoring report	16/04/2019	
Monitoring period number	The 5th monitoring period	
Duration of this monitoring period	01/01/2018 – 31/12/2018 (both days included)	
Monitoring report number for this monitoring report	N/A	
Project participants	InfraVest Wind Power Group South Pole Carbon Asset Management Ltd.	
Host Party	Taiwan	
Sectoral scopes	Sectoral Scope 1: Energy Industries (Renewable Source)	
Applied methodologies and standardized baselines	Large-scale Consolidated Methodology "Grid-connected electricity generation from renewable sources" Version 13.0	
Amount of GHG emission reductions or net anthropogenic GHG removals achieved by the project activity in this monitoring period	Amount achieved before 1 January 2013	Amount achieved from 1 January 2013
	0	149,810 tCO_2e
Amount of GHG emission reductions or net anthropogenic GHG removals estimated ex ante for this monitoring period in the PDD	186,155[1] tCO_2e	

[1] 190,908 tCO_2e (annual GHG emission reductions in PDD)/ 92.4 (total installed capacity in PDD) * 90.1 (actual installed capacity in this monitoring period)/ 365days*365days (from 01/01/2018- 31/12/2018) = 186,155 tCO_2e.

SECTION A. Description of project activity

A.1. General description of project activity

>>

The InfraVest Taiwan Wind Farms Bundled Project 2011(hereinafter referred to as "the project") is a bundled project of four wind farms projects:

- InfraVest Fongwei Wind Farm Project, Taiwan: a 13.8 MW (6x2.3 MW) onshore wind farm located in Hsinfong Township (therefore also called Hsinfong Wind Farm), Hsinchu County, which comprises 6 wind turbines (hereafter: **Fongwei Wind Farm**).
- InfraVest Longwei Wind Farm Project, Taiwan: a 44.1 MW (18x2.3 MW + 3x0.9 MW) onshore wind farm located in Houlong Township (therefore also called Houlong Wind Farm), Miaoli County, which comprises 21 wind turbines (hereafter: **Longwei Wind Farm**).
- InfraVest Chungwei Wind Farm Project, Taiwan: a 29.9 MW (13x2.3 MW) onshore wind farm located in Dajia and Da-An Townships, Taichung County, which covers Taichung phases I and III, and Dafong sites, and which comprises 13 wind turbines (hereafter: **Chungwei Wind Farm**). There are another 20 wind turbines also located in Dajia and Da-An Townships, Taichung County, which belong to the same project owner. But these 20 turbines belong to the project owner's another GS VER project (GS472), which was already registered in 2010. Therefore, the 13 wind turbines in Chungwei Wind Farm under the project are the capacity addition to the existing grid-connected renewable power plant (project GS472).
- InfraVest Tauwei Wind Farm Project, Taiwan: a 4.6 MW (2x2.3 MW) onshore wind farm located in Guanyin Township (also called Hsinwu Wind Farm), Taoyuan County, which comprises 2 wind turbines (hereafter: **Tauwei Wind Farm**). There are another 19 wind turbines also located in Guanyin Township, Taoyuan County, which belong to the same project owner. But these 19 turbines belong to the project owner's another GS VER project (GS612), which was already registered in 2011. Therefore, the 2 wind turbines in Tauwei Wind Farm under the project are the capacity addition to the existing grid-connected renewable power plant (project GS612).

The above-mentioned four wind farms are constructed and operated by InfraVest Wind Power Group (hereafter refer as "InfraVest"), which is a subsidiary of Germany based VWind AG. The project in total comprises 42 wind turbines and the total installed capacity of the bundled project is 92.4 MW. At full capacity, the aggregated output of the project is expected to be of 250,866 MWh/year, which is to be delivered to the state-owned power grid, Taipower grid ("TPG"), displacing part of the electricity supplied by the power grid currently dominated by fossil fuel-fired power plants. Accordingly, the project will lead to carbon dioxide emission reduction. The annual emission reductions are estimated as 190,908 tCO_2e/year, and the total emission reductions for the first crediting period of 7 years are estimated as 1,336,356 tCO_2e.

A.2. Location of project activity

>>

The locations of the wind farms are all in West Taiwan. Fongwei Wind Farm is located at the coastal land of Hsinfong Township, Hsinchu County. Hsinchu County is located in northwestern Taiwan, and is connected with Taoyuan County in north, Miaoli County in south, Taiwan Strait in the west and the Snow Mountains (Dabajian Mountain) in the east. Hsinchu County is surrounded by mountains on three sides.

Longwei Wind Farm is located in the west coastal land of Houlong Township, Miaoli County. Miaoli County is located in mountainous and hilly areas of central and northern Taiwan.

Chungwei Wind Farm is located in the coastal land of Dajia and Da-An Townships, Taichung County. Dajia and Da-An Townships are in the northwest of Taichung County and connected with Taiwan Strait in the west.

Tauwei Wind Farm is located in the west coastal land of Guanyin Townships, Taoyuan County. Taoyuan County is located in north-western Taiwan, close to the Taipei metropolitan area; with the majority of terrains are the hill terraces.

The project activities are distributed in these zones, which are at the geographical positions of:

Wind Farm Name	Coordinates for center of farm
Tauwei Wind Farm	25º02’43”N, 121º04’21”E
Fongwei Wind Farm	24º55’48”N, 120º58’40”E
Longwei Wind Farm	24º36’41”N, 120º44’13”E
Chungwei Wind Farm	24º24’21”N, 120º35’59”E

Figure A-1 shows the geographical locations of the project.

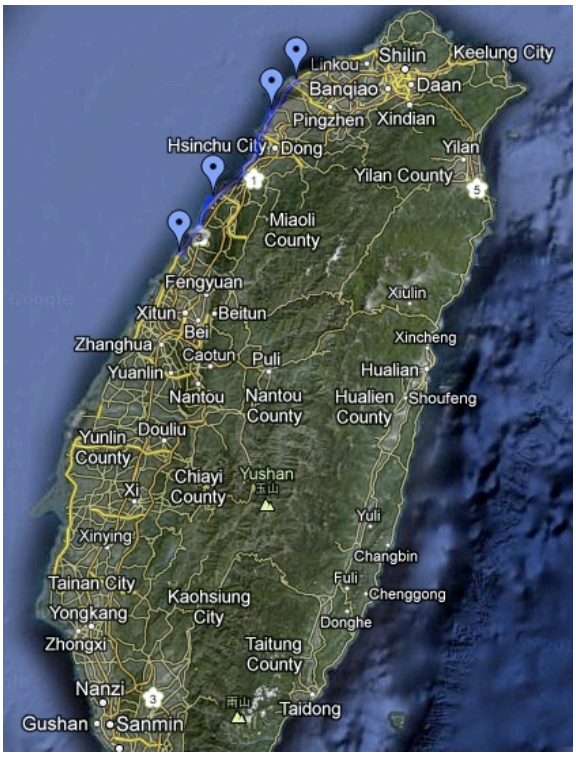

A.3. Parties and project participants

Parties involved	Project participants	Indicate if the Party involved wishes to be considered as project participant (Yes/No)
Taiwan (host)	InfraVest Wind Power Group (private entity)	No
Switzerland	South Pole Carbon Asset Management Ltd. (private entity)	No

A.4. Reference to applied methodologies and standardized baselines

>>

The approved consolidated baseline and monitoring methodology ACM0002 (version 13.0.0) “Consolidated baseline methodology for grid-connected electricity generation from renewable sources – Version 13.0.0” has been used.

The methodology was applied with the following tools:

- Tool for the demonstration and assessment of additionality (Version 07.0.0)
- Tool to calculate the emission factor for an electricity system (Version 03.0.0)

Details are available at the following website:
http://cdm.unfccc.int/methodologies/PAmethodologies/approved

A.5. Crediting period type and duration

>>
Type of the crediting period of this monitoring period: Renewable.
This is the first crediting period: 7 years and 0 months.
The first crediting period:01/01/2014 to 31/12/2020
The second monitoring period: 01/04/2015 to 31/03/2016
The third monitoring period: 01/04/2016 to 31/12/2016
The fourth monitoring period: 01/01/2017 to 31/12/2017
The fifth monitoring period: 01/01/2018 to 31/12/2018

SECTION B. Implementation of project activity

B.1. Description of implemented project activity

>>
The project in total comprises 39 Enercon E-70 wind turbines with the unit capacity of 2.3 MW and 3 Enercon E-44 wind turbines with the unit capacity of 0.9 MW. The turbines installed are imported from German wind turbine supplier, Enercon. Wind turbines type Enercon E-70 is used, with 71 m diameters and 64 m hub heights; and wind turbines type Enercon E-44 is used, with 44 m diameters and 55 m hub heights.
The technical data of the turbine units of turbine type E-70 and E-44 are given in the tables below.

Table 1. Characteristics of the wind turbine E-70

Wind Turbine Type:	E-70			
Site:	Fongwei	Longwei	Chungwei	Tauwei
Rated Power:	2300 kW			
Number of turbines	6	18	13	2
Output voltage	400 V			
Rotor diameter:	71 m			
Hub Height:	64 m			
Generator:	Enercon direct-drive synchronous annular generator			
Grid feeding:	ENERCON converter			
Technical lifetime	20 years			

Table 2. Characteristics of the wind turbine E-44

Wind Turbine Type:	E-44
Site:	Longwei
Rated Power:	900 kW
Number of turbines	3
Output voltage	400 V
Rotor diameter:	44 m
Hub Height:	55 m
Generator:	Enercon direct-drive synchronous annular generator
Grid feeding:	ENERCON converter
Technical lifetime	20 years

The turbines in Fongwei wind farm site are connected to Taipower grid at SongLin S/S Substation through 11.4 kV transmission lines. In Longwei wind farm site, 18 turbines are connected to Taipower 69 kV grid through the Gongguan-Miaozi 69 kV line #1 connection station, and 3 turbines are connected to Taipower 11.4 kV grid at Houlong S/S Substation by 2 lines separately. The turbines in Chungwei wind farm site are connected to Taipower 69 kV grid through 22.8kV/69kV

transformer. The turbines in Tauwei wind farm site are connected to Taipower 161 kV grid through Guanyin wind farm. Each wind farm utilizes bi-directional watthour meters measuring electricity supplied to Taipower grid.

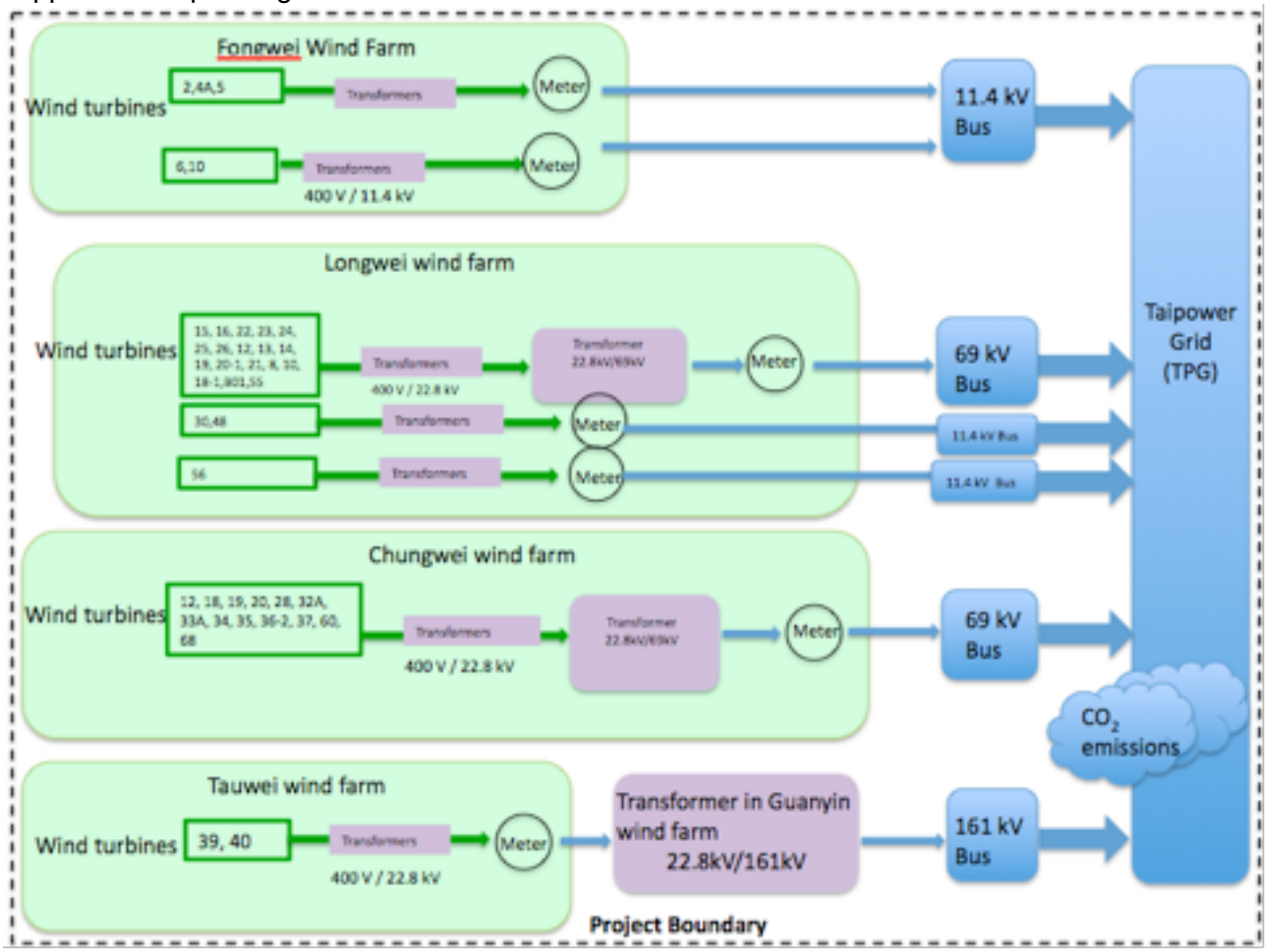

During monitoring period (01/01/2018 to 31/12/2018), the wind turbines already installed and started operating are listed in the table:

Wind Farm Name	Unit Capacity (MW)	Numbers of units	Overall installed Capacity (MW)	Estimated Electricity generation (MWh)	Wind turbine ID No. (already installed and start operating)*	Installed Capacity (MW)	First turbine Operation start date
Fongwei	2.3	6	13.8	35,314	2, 4A, 5, 6, 10	11.5	26/09/2011
Longwei	2.3	18	41.4	105,943	8, 10, 13, 14, 15, 16, 19, 20-1, 21, 22, 23, 24, 25, 26, B01, 56, 30, 48	41.4	27/04/2012
	0.9	3	2.7	6,909	12, 18-1,55	2.7	
Chungwei	2.3	3	6.9	20,493	12, 18, 19, 20, 28,	29.9	31/10/2011
	2.3	9	20.7	61,479			

	2.3	1	2.3	6,831	32A, 33A, 34, 35, 36-2, 37, 60, 68		
Tauwei	2.3	2	4.6	13,897	39, 40	4.6	04/07/2011
Total	-	42	92.4	250,866	-	90.1	-

For Fongwei wind farm, still one wind turbine not being installed during this monitoring period. The construction of the remaining turbine of Fongwei is planned to complete by 2019, and operation will start in 2020.
And the full operation date of Chungwei wind farm is 26/09/2012. The full operation date of Tauwei wind farm is 04/07/2011. The full operation date of Longwei wind farm is 12/2015.
No events or situation that occurred during the monitoring period, which may impact the GHG emission reductions or removals and monitoring.

B.2. Post-registration changes

B.2.1. Temporary deviations from the registered monitoring plan, applied methodologies or standardized baselines

>>
No temporary deviations from registered monitoring plan or applied methodology.

B.2.2. Corrections

>>
No corrections.

B.2.3. Changes to the start date of the crediting period

>>
Not applicable.

B.2.4. Inclusion of monitoring plan

>>
Not applicable.

B.2.5. Permanent changes to the registered monitoring plan, or permanent deviation of monitoring from the applied methodologies, standardized baselines, or other applied standards or tools

>>
Not applicable.

B.2.6. Changes to project design

>>
No changes to project design of registered project activity.

SECTION C. Description of monitoring system

>>

1. Monitoring Objectives:

As per ACM0002, the emission reductions achieved by the project activity will be determined ex-post through direct measurement of the amount net electricity supplied to the grid multiplied by the combined margin emission factor:

$ER_y = EG_{facility,y} * EF_{grid,CM,y}$ (for Fongwei and Longwei Wind Farms)
$ER_y = EG_{PJ\_Add,y} * EF_{grid,CM,y}$ (for Chungwei and Tauwei Wind Farms)

Where:
ER_y = Emission emissions in year y (tCO_2/yr)
$EG_{facility,y}$ = Quantity of net electricity generation supplied by the project plant/unit to the grid in year y (MWh/yr)
$EG_{PJ\_Add,y}$ = Quantity of net electricity generation supplied to the grid in year y by the project plant/unit that has been added under the project activity (MWh/yr)
$EF_{grid,CM,y}$ = Combined margin CO_2 emission factor for grid connected power generation in year y calculated using the latest version of the "Tool to calculate the emission factor for an electricity system" (tCO_2/MWh)

As the emission factor is fixed for the first crediting period, the aim of the monitoring is therefore only to monitor the quantity of net electricity generation supplied by the project plant to the grid using energy meters. The project proponent may use electricity from the grid for start-up purpose so both electricity consumption and generation will be monitored:

$EG_{facility,y} = EG_{Export,y} - EG_{Import,y}$ (for Fongwei and Longwei Wind Farms)
$EG_{PJ\_Add,y} = EG_{Export,y} - EG_{Import,y}$ (for Chungwei and Tauwei Wind Farms)

$EG_{facility,y}$ Quantity of net electricity generation supplied by the project plant/unit to the grid in year y (MWh/yr)
$EG_{PJ\_Add,y}$ Quantity of net electricity generation supplied to the grid in year y by the project plant/unit that has been added under the project activity (MWh/yr)
$EG_{Export,y}$ Quantity of electricity generation supplied by the project plant/unit to the grid in year y (MWh/y)
$EG_{Import,y}$ Quantity of electricity consumption of the project plant/unit from the grid in year y (MWh/y)

2. Electricity meters:

Electricity generation ($EG_{Export,y}$) and consumption ($EG_{Import,y}$) are measured continuously by bi-directional meters installed at the wind farms switchrooms, which are owned and supervised by Taipower. The accuracy for meters is equal to or higher than 0.5%. The meters locations and numbers of meters used for each wind farm are listed as below[2]:

Fongwei Wind Farm:
Two bi-directional electricity meters are located in Fongwei wind farm 11.4 kV Switchroom, before connection to Taipower 11.4 kV grid at SongLin S/S Substation respectively.

Longwei Wind Farm:
One bi-directional electricity meter is located in Longwei wind farm 69 kV Switchroom, primary side of the 22.8kV/69kV Transformer, and before connection to the Gongguan-Miaozi 69 kV line #1 connection station; and the other two meters are installed in Longwei wind farm 11.4 kV Switchroom, before connection to Taipower 11.4 kV grid at HouLong S/S Substation respectively

Chungwei Wind Farm:
One bi-directional electricity meter is located in Chungwei wind farm 22.8 kV Switchroom, after the 22.8kV/69kV Transformer and before connection to Taipower 69 kV grid.

Tauwei Wind Farm:

[2] The wind turbines serial numbers for turbines already installed and stared operating are included in the diagram. For Fongwei wind farm, there is still one turbine are planned to be installed. Since the project construction has been fully complete, the line diagram will be subject to future changes. For Longwei wind farm, it is in full operation in 12/2015. The line diagram has been updated accordingly.

One bi-directional electricity meter is located in Tauwei wind farm switchroom, before the electricity generated by Tauwei is connected with Guanyin wind farm, then to Taipower 161 kV grid.

Please find the meter calibration and accuracy information in the following table:

Wind Farm	Meter Serial No.	Meter model	Specific location	Accuracy Class	Calibration date (dd/mm/yy)	Valid until (dd/mm/yy)
Fongwei	10940003	kV2c	Fongwei wind farm	0.5	27/08/2010	26/08/2018
Fongwei	18080240[3]	SS4A2L	Fongwei wind farm	0.5	20/08/2018	19/08/2026
Fongwei	10940035	kV2c	Fongwei wind farm	0.5	27/08/2010	26/08/2018
Fongwei	18080247[4]	SS4A2L	Fongwei wind farm	0.5	20/08/2018	19/08/2026
Longwei	15001372	kV2c	Longwei wind farm	0.5	09/11/2015	08/11/2023
Longwei	15001382	kV2c	Longwei wind farm	0.5	09/11/2015	08/11/2023
Longwei	10940022	kV2c	Longwei wind farm	0.5	27/08/2010	26/08/2018
Longwei	12941313[5]	kV2c	Longwei wind farm	0.5	18/12/2012	17/12/2020
Chungwei	12941317	kV2c	Chungwei wind farm	0.5	18/12/2012	17/12/2020
Tauwei	11943540	kV2c	Tauwei wind farm	0.5	14/12/2011	13/12/2019

The turbines in Fongwei wind farm site are connected to Taipower grid at SongLin S/S Substation through 11.4 kV transmission line. In Longwei wind farm site, 18 turbines are connected to Taipower 69 kV grid through the Gongguan-Miaozi 69 kV line #1 connection station, and 3 turbines are connected to Taipower 11.4 kV grid at Houlong S/S Substation by 2 lines separately. The turbines in Chungwei wind farm site are connected to Taipower 69 kV grid through 22.8kV/69kV transformer. The turbines in Tauwei wind farm site are connected to Taipower 161 kV grid through Guanyin wind farm. Electricity Connection Diagram with meters locations for each wind farm is attached as below:

[3] The meter 10940003 was changed to meter 18080240 in 24/08/2018.

[4] The meter 10940035 was changed to meter 18080247 in 24/08/2018.

[5] The meter 10940022 was changed to meter 12941313 in 06/01/2018.

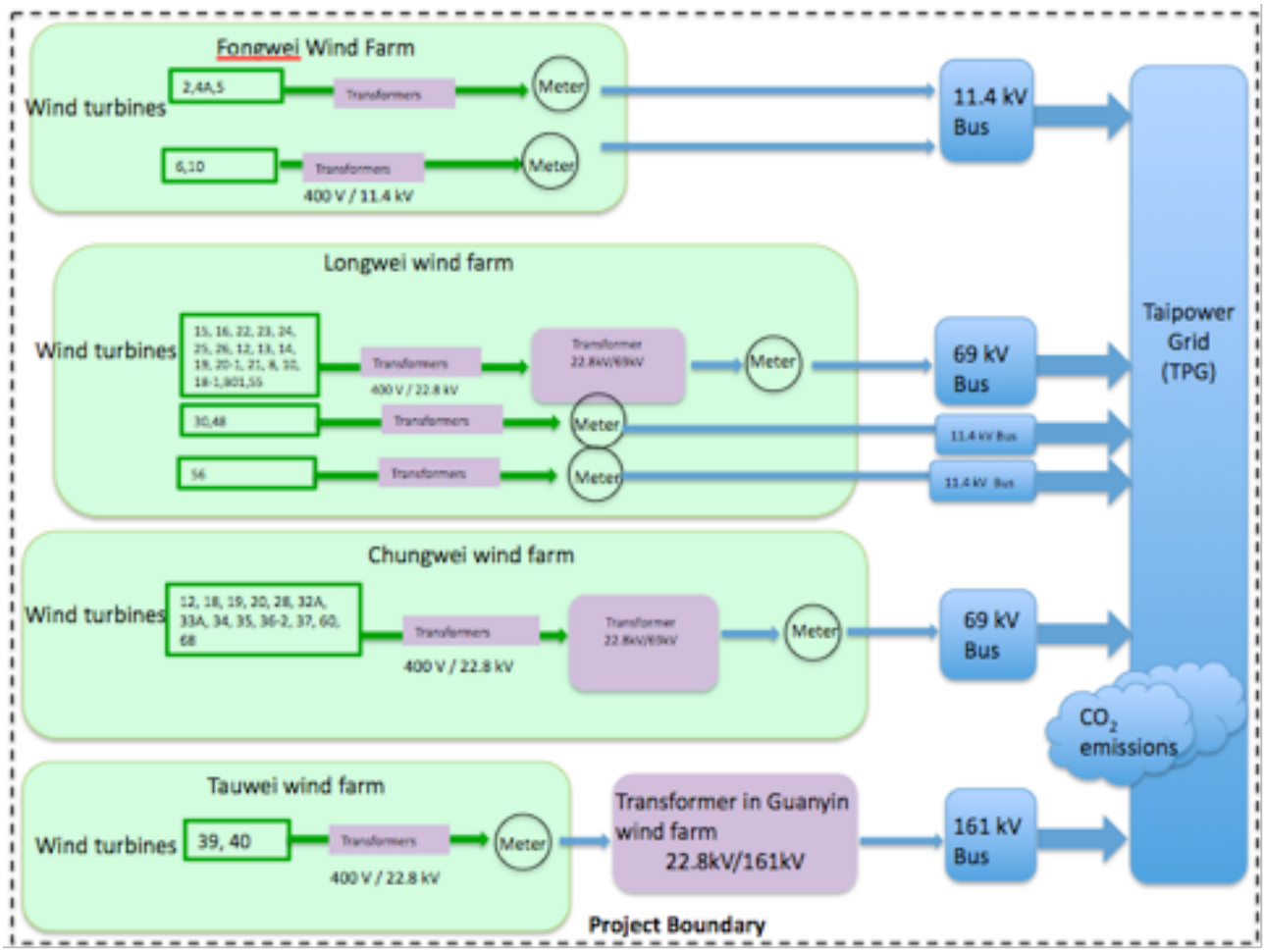

3. Responsibility of Parties

Two parties are involved: InfraVest (project owner), Taipower (grid company).

InfraVest is in charge of overall wind projects operation & maintenance.

Taipower is in charge of monitoring.

4. Data Monitoring & Management Procedures:

The monitoring is done according to the following procedures:

1. Data from electricity meters are recorded remotely and digitally at the Taipower office. The cut-off time is the last day of every month. Taipower's personnel download the electric data.
2. Taipower incorporates the downloaded electric data into the monthly electricity receipts and sends to InfraVest for confirmation on the amount of both electricity export and import;
3. InfraVest confirms the electricity amount on the receipts.
4. Taipower pays the money to InfraVest for the confirmed export amount and receives export invoices from InfraVest. InfraVest pays to Taipower for the confirmed import amount and receives import invoices from Taipower.

GS VER monitoring training for the staffs will be provided.

5. Quality assurance and quality control procedures

The meter specification complies with The Weight and Measures Act, Regulation no. CNMV 46,

'Technical Specification for Verification and Inspection of Electricity Meters'[6]. The accuracy class of the electricity meters used for the project activity would be at least 0.5%, in line with the official standard error for electricity meter (MOF) at ±0.5%[7].

The official period of validity for the *electronic electricity meter* in this project is determined as 8 years. Request for calibration, error check and adjustment can be made by the project owner at its own expense. Taipower's calibration procedures are in accordance to and governed by the Bureau of Standards, Metrology and Inspection, Ministry of Economic Affairs, Taiwan R.O.C. All the calibration records will be documented by the project owner and provided to the DOE during verification.

All emergency and disputes management procedures related to the electricity meter are regulated by Bureau of Standards, Metrology and Inspection, M.O.E.A., R.O.C[8]. In case of meter performance failure or malfunction, Taipower and the project owner would follow the Power Purchase Agreement (PPA) clause 6: Taipower and the project owner will jointly recalculate the amount of electricity dispatched by the project during the malfunction period based on the electricity dispatched during the same period last year or on the average electricity dispatched normally during the previous three periods for electricity purchasing and sales.[9]

SECTION D. Data and parameters

D.1. Data and parameters fixed ex ante

Data/Parameter	$EF_{grid, CM, y}$
Unit	tCO_2e/MWh
Description	Combined Margin(CM) Emission Factor
Source of data	Calculated
Value(s) applied	0.761 for the first crediting period
Choice of data or measurement methods and procedures	The Combined Margin Emission Factor has been calculated in accordance with "Tool to calculate the emission factor for an electricity system"
Purpose of data/parameter	Calculation of baseline emissions
Additional comments	Combined margin emission factor is fixed ex-ante throughout the crediting period.

D.2. Data and parameters monitored

Data/Parameter	$EG_{Export,y}$
Unit	MWh/yr
Description	Quantity of electricity generation supplied by the project plant/unit to the grid in year y

[6]The Weight and Measures Act www.bsmi.gov.tw/wSite/public/Attachment/f1224657229438.doc
Technical Specification for Verification and Inspection of Electricity Meters

http://www.bsmi.gov.tw/wSite/public/Attachment/f1224657229438.doc Clause 3.9.3

[7] The Weight and Measures Act www.bsmi.gov.tw/wSite/public/Attachment/f1224657229438.doc

Technical Specification for Verification and Inspection of Electricity Meters

http://www.bsmi.gov.tw/wSite/public/Attachment/f1224657229438.doc Clause 3.3.4 Table 4

[8] http://www.bsmi.gov.tw/wSite/laws/review.jsp?lawId=8a8a85591c30ce08011c31d0b3860006&mp=1

[9] Please refer to the Power Purchase Agreement (PPA) of the project activity.

Measured/calculated/ default	Measured
Source of data	Electricity meters
Value(s) of monitored parameter	197,378.385 MWh
Monitoring equipment	Bi-directional meters for measuring electricity supplied to the grid by the project activity. Please refer to calibration and accuracy information of meters in section C.
Measuring/reading/recording frequency	Continuous measurement and at least monthly recording.
Calculation method (if applicable)	N/A
QA/QC procedures	Meter reading records will be crosschecked with the electricity receipts. The electricity meters will undergo maintenance/calibration according to Taiwan national standards (based on The Weight and Measures Act, Regulation no. CNMV 46, 'Technical Specification for Verification and Inspection of Electricity Meters') Accordingly, meter calibration is conducted every 8 years period.
Purpose of data/parameter	Calculation of baseline emissions
Additional comments	-

Data/Parameter	**$EG_{Import,y}$**
Unit	MWh/yr
Description	Quantity of electricity consumption of the project plant/unit from the grid in year y
Measured/calculated/ default	Measured
Source of data	Electricity meter
Value(s) of monitored parameter	518.761 MWh
Monitoring equipment	Bi-directional meters are used for measuring electricity imported from the grid by the project activity. Please refer to calibration and accuracy information of meters in section C.
Measuring/reading/recording frequency	Continuous measurement and at least monthly recording.
Calculation method (if applicable)	N/A
QA/QC procedures	Meter reading records will be crosschecked with the electricity receipts. The electricity meters will undergo maintenance/calibration according to Taiwan national standards (based on The Weight and Measures Act, Regulation no. CNMV 46, 'Technical Specification for Verification and Inspection of Electricity Meters') Accordingly, meter calibration is conducted every 8 years period.
Purpose of data/parameter	Calculation of baseline emissions
Additional comments	-

Data/Parameter	**$EG_{facility,y}$** **$EG_{PJ\_Add,y}$**
Unit	MWh/yr
Description	Quantity of net electricity generation supplied by the project plant/unit to the grid in year y Quantity of net electricity generation supplied to the grid in year y by the project plant/unit that has been added under the project activity

Measured/calculated/ default	Calculated
Source of data	Electricity meter
Value(s) of monitored parameter	196,859.624 MWh
Monitoring equipment	Bi-directional meters are used for measuring net electricity supplied to the grid by the project activity. Please refer to calibration and accuracy information of meters in section C.
Measuring/reading/recording frequency	Continuous measurement and at least monthly recording.
Calculation method (if applicable)	Calculated by the difference of $EG_{Export,y}$ – $EG_{Import,y}$ which are measured continuously and at least monthly recording.
QA/QC procedures	Meter reading records of $EG_{Export,y}$ and $EG_{Import,y}$ will be crosschecked with the electricity receipts, and calculation will be double checked and verified.
Purpose of data/parameter	Calculation of baseline emissions
Additional comments	-

Data/Parameter	Air Quality
Unit	N/A
Description	Atmospheric pollutants abatements
Measured/calculated/ default	Calculated
Source of data	Taipower's announcement related to its SO_x, NO_x and TSP emissions[10]
Value(s) of monitored parameter	

Monitoring period (01/01/2018-31/12/2018)	2018 data	SO_x	NO_x	TSP
Pollutants were averagely generated per GWh power generation of national grid	Per GWh	182 kg	213 kg	20kg
$EG_{facility,y}$ $EG_{PJ\_Add,y}$	196,859,624 kWh	**35.83 tonnes**	**41.93 tonnes**	**3.94 tonnes**

Monitoring equipment	N/A
Measuring/reading/recording frequency	Annual
Calculation method (if applicable)	N/A
QA/QC procedures	Calculated annually, based on SO_x, NO_x and TSP averaged emission factors publicly announced by the grid. The project owner is responsible for keeping the generation data. The data is then collected and calculated by South Pole Carbon Asset Management Ltd.
Purpose of data/parameter	Sustainable development evaluation
Additional comments	

Data/Parameter	Quantitative employment and income generation
Unit	Persons
Description	Number of jobs, salary level
Measured/calculated/ default	Measured

[10] https://www.taipower.com.tw/tc/page.aspx?mid=216

Source of data	EIA reports
Value(s) of monitored parameter	The project activity generates employment of 49 persons during the operational period. 15 persons during project development, 17 persons during administration and logistics, 17 persons during wind farm operation.
Monitoring equipment	N/A
Measuring/reading/recording frequency	Annual
Calculation method (if applicable)	N/A
QA/QC procedures	The human resource department of InfraVest will provide a chart of employment, specifying the number of manpower allocated in the project. Labour insurance list will also be provided to the DOE during annual verification. Employment record will be kept at InfraVest Taipei Office.
Purpose of data/parameter	Sustainable development evaluation
Additional comments	

Data/Parameter	Other pollutants
Unit	N/A
Description	Installation of airtight windows
Measured/calculated/ default	Measured
Source of data	Records of airtight windows installation for residents in need
Value(s) of monitored parameter	No such requirement was needed.
Monitoring equipment	N/A
Measuring/reading/recording frequency	Annual
Calculation method (if applicable)	N/A
QA/QC procedures	The local stakeholder will be interviewed annually. The project owner will keep all records.
Purpose of data/parameter	Sustainable development evaluation
Additional comments	

Data/Parameter	Biodiversity
Unit	N/A
Description	Plants re-plantation
Measured/calculated/ default	Measured
Source of data	EIA reports
Value(s) of monitored parameter	<table><tr><th>Wind Farm</th><th>Total Target Area</th><th>Completion progress</th></tr><tr><td>InfraVest Fongwei Wind Farm Project</td><td>6340.97</td><td>104%</td></tr><tr><td>InfraVest Longwei Wind Farm Project</td><td>18992.31</td><td>100%</td></tr><tr><td>InfraVest Chungwei Wind Farm Project</td><td>5709</td><td>100%</td></tr><tr><td>InfraVest Tauwei Wind Farm Project</td><td>1200</td><td>100%</td></tr></table> No negative impact observed
Monitoring equipment	N/A
Measuring/reading/recording frequency	Annual

Calculation method (if applicable)	N/A
QA/QC procedures	According to the letters from the Forestry Bureau for the re-plantation of Chungwei and Tauwei has met the governmental requirements and the future re-plantation maintenance will be transferred to local government. The project owner will not take any responsibility of re-plantation maintenance of the project any more. According to the letters from the Forestry Bureau for the re-plantation of Fongwei and Longwei has met the governmental requirements, and the project owner will keep all records and photos.
Purpose of data/parameter	Sustainable development evaluation
Additional comments	

Data/Parameter	Landscape and visual impact
Unit	N/A
Description	The overall color of wind towers is mainly white or light-color and the surroundings of wind towers are greened.
Measured/calculated/ default	Measured
Source of data	Interview records
Value(s) of monitored parameter	No complaint about the landscape and visual impact.
Monitoring equipment	N/A
Measuring/reading/recording frequency	Annual
Calculation method (if applicable)	N/A
QA/QC procedures	The project owner will keep all records.
Purpose of data/parameter	Sustainable development evaluation
Additional comments	

Data/Parameter	Electromagnetic interference and radiation
Unit	N/A
Description	Installation of relevant antenna or devices for user in need
Measured/calculated/ default	Measured
Source of data	Installation records of relevant antenna or devices for user in need
Value(s) of monitored parameter	No complaint about the electromagnetic impact and no requirement of installation of relevant antenna or devices has been received from residents by the project owner.
Monitoring equipment	N/A
Measuring/reading/recording frequency	Annual
Calculation method (if applicable)	N/A
QA/QC procedures	The local stakeholder will be interviewed annually. The project owner will keep all records.
Purpose of data/parameter	Sustainable development evaluation
Additional comments	

D.3. Implementation of sampling plan

>>

Not Applicable

SECTION E. Calculation of emission reductions or net anthropogenic removals

E.1. Calculation of baseline emissions or baseline net removals

>>

As per ACM0002, baseline emissions include only CO_2 emissions from electricity generation in fossil fuel fired power plants that are displaced due to the project activity, calculated as follows:

$BE_y = EG_{PJ,y} * EF_{grid,CM,y}$

Where:

BE_y = Baseline emissions in year y (tCO_2/yr)

$EG_{PJ,y}$ = Quantity of net electricity generation that is produced and fed into the grid as a result of the implementation of the CDM project activity in year y (MWh/yr)

$EF_{grid,CM,y}$ = Combined margin CO_2 emission factor for grid connected power generation in year y calculated using the latest version of the "Tool to calculate the emission factor for an electricity system" (tCO_2/MWh)

As per ACM0002, Fongwei and Longwei Wind Farms under the project activity are the installations of new grid-connected renewable power plants at sites where no renewable power plant was operated prior to the implementation of the project activity, so:

$EG_{PJ,y} = EG_{facility,y}$

Where:

$EG_{facility,y}$ = Quantity of net electricity generation supplied by the project plant/unit to the grid in year y (MWh/yr)

According to ACM0002, Chungwei and Tauwei Wind Farms under the project activity are the capacity additions to existing renewable energy power plants, it is assumed that the addition of new capacity does not significantly affect the electricity generated by existing plants. In this case, the electricity fed into the grid by the added power plants could be directly metered and used to determine $EG_{PJ,y}$.

Project participants may use one of the following two options to determine $EG_{PJ,y}$:

- Option 1: Use the approach applied to retrofits and replacements above. $EG_{facility,y}$ corresponds to the total electricity generation of the existing plant(s) or unit(s) and the added plant(s) or unit(s). A separate metering of electricity fed into the grid by the added plant(s) or unit(s) is not necessary under this option. This option may be applied to all renewable power projects.
- Option 2: For wind, solar, wave or tidal power plant(s) or unit(s), the following approach can be used provided that the electricity fed into the grid by the added power plant(s) or unit(s) addition is separately metered:

$EG_{PJ,y} = EG_{PJ\_Add,y}$

Where:

$EG_{PJ,y}$ = Quantity of net electricity generation that is produced and fed into the grid as a result of the implementation of the CDM project activity in year y (MWh/yr)

$EG_{PJ\_Add,y}$ = Quantity of net electricity generation supplied to the grid in year y by the project plant/unit that has been added under the project activity (MWh/yr)

For the project activity, option 2 is applied.

After simplification, the final result for calculating this project's baseline emission reduction is the following:

$BE_y = EG_{facility,y} * EF_{grid,CM,y}$ (for Fongwei and Longwei Wind Farms)

$BE_y = EG_{PJ\_Add,y} * EF_{grid,CM,y}$ (for Chungwei and Tauwei Wind Farms)

During this monitoring period (01/01/2018 to 31/12/2018):

$EG_{facility,y}$	Quantity of net electricity generation supplied by the project plant/unit to the grid in year y	196,859.624	MWh/year
$EG_{PJ\_Add,y}$	Quantity of net electricity generation supplied to the grid in year y by the project plant/unit that has been added under the project activity		MWh/year
$EF_{grid,CM,y}$	Combined margin CO_2 emission factor	0.761	tCO_2e/MWh
BE_y	Baseline emission reductions	149,810	$tCO_2e/year$

E.2. Calculation of project emissions or actual net removals

>>

As per ACM0002, the project emission for most renewable energy (including wind farm) project activities is zero ($PE_y = 0$).

E.3. Calculation of leakage emissions

>>

For the leakage, according to ACM0002, no leakage emissions are considered. The main emissions potentially giving rise to leakage in the context of electric sector projects are emissions arising due to activities such as power plant construction and upstream emissions from fossil fuel use (e.g. extraction, processing, transport). These emissions sources are neglected.

Therefore, the leakage in this project is zero as well ($LE_y = 0$).

E.4. Calculation of emission reductions or net anthropogenic removals

	Baseline GHG emissions or baseline net GHG removals (t CO_2e)	Project GHG emissions or actual net GHG removals (t CO_2e)	Leakage GHG emissions (t CO_2e)	GHG emission reductions or net anthropogenic GHG removals (t CO_2e)		
				Before 01/01/2013	From 01/01/2013	Total amount
Total	149,810	0	0	0	149,810	149,810

E.5. Comparison of emission reductions or net anthropogenic removals achieved with estimates in the registered PDD

Amount achieved during this monitoring period (t CO_2e)	Amount estimated ex ante (t CO_2e)
149,810	186,155[11]

E.6. Remarks on increase in achieved emission reductions

>>

The actual ER during the current monitoring period is 19.52% lower than expected ERs as per the registered PDD.

[11] 190,908 tCO_2e (annual GHG emission reductions in PDD)/ 92.4 (total installed capacity in PDD) * 90.1 (actual installed capacity in this monitoring period)/ 365days*365days (from 01/01/2018- 31/12/2018) = 186,155 tCO_2e.

SECTION F. Sustainable Indicators

1. Air Quality

The air quality indicator is roughly monitored via the project's electricity generation with reference to the atmospheric pollutant emissions associated with the fuel-based grid electricity generation in the region. Pollutant abatements is therefore be easily computed based on the fuel usage estimations per kWh power generation that is mentioned in the approved EIA report, as quoted in the SD matrix. Therefore, calculation is done according to the national grid's announcement related to its SOx and NOx emissions.

According to the latest statistic data (2018 data), 182 kg of SOx, 213kg of NOx and 20 kg of TSP were averagely generated per GWh power generation[12]. The total net generation within this monitoring period is 196.859624GWh, which means that the project has mitigated approximately of 35.83 tonnes SOx, 41.93 tonnes NOx and 3.94 tonnes TSP during this monitoring period.

2. Quantitative employment and income generation

The project activity generates employment of 49 persons during the *operational period*. Details are described as the following:

1. Project development: 3 person in InfraVest Tauwei Wind Farm Project, 4 person in InfraVest Longwei Wind Farm Project, 4 person in InfraVest Fongwei Wind Farm Project, 4 person in InfraVest Chungwei Wind Farm Project
   Job descriptions:
   - Land use, rent contract and payment applications
   - Land use approval applications, contract renewal
   - EIA commitments implementation
   - Contract implementation regarding MOF, space rent, GIS maintenance, etc.

2. Administration and logistics: 3 person in InfraVest Tauwei Wind Farm Project, 5 person in InfraVest Longwei Wind Farm Project, 4 person in InfraVest Fongwei Wind Farm Project, 5 person in InfraVest Chungwei Wind Farm Project
   Job descriptions:
   - Project finances and accounting
   - Invoice and payment management, eg. sending monthly invoice to TPC, confirm payment
   - Monthly report and annual report writing

3. Wind farm operation: 3 person in InfraVest Tauwei Wind Farm Project, 5 person in InfraVest Longwei Wind Farm Project, 4 person in InfraVest Fongwei Wind Farm Project, 5 person in InfraVest Chungwei Wind Farm Project
   Job descriptions:
   - Wind farm operation, maintenance, and emergency measures, incl. WTG, substation, grid transmission, transportation, etc.
   - Power production calculation

Supporting documents provided to the DOE during site visit:
- Organizational chart of manpower allocation and responsibilities of each departments
- Health insurance records in local language

Several technical and safety trainings were organized by InfraVest and trained by external institute and experts. Certificates were issued to trainees after the trainings. Detail information about trainings is provided in the table below:

No.	Training Date	Training Content	Trainer

[12] https://www.taipower.com.tw/tc/page.aspx?mid=216

1	12/06/2018	Theory and practice of Basic Life Support (BLS)	The Red Cross Society of the Republic of China (Taiwan)
2	19/11/2018-20/11/2018	Emergency evacuation and fire fighting	wpd Taiwan Energy Co., Ltd.

Welfare provided for their well-being complies with the national regulations such as Labor Standards Act[13] and other related law.

Labor Standards Act covers fundamental regulations related to employment within the country, including prohibited compulsory labor, gender equality, etc. Related requirements such as minimum salary, and regulation of working hours are clarified as follows:

1. According to the Labor Standards Act Article 30[14], a worker shall not have regular working time in excess of eight hours a day and eighty-four hours every two weeks. Working hours in InfraVest is 8 hours a day, 5 days a week, as stated in its internal employment guidelines. Thus, the total working hours are 40 hours/week, which is in line with the law.
2. The minimum salary is regulated by relevant Act in Taiwan[15]. Since the labor insurance premiums are relative to the employee's compensation (as shown in Insurance Premium Chart on Council of Labor Affairs website[16]), salaries of relevant employees can be found in the labor insurance list, which was provided to the DOE during the verification

Supporting Documents:

- Training Records provided by the project owner
- Welfare provided to the staffs: Labor Insurance e-list.
- Employees health insurance list

3 Other pollutants

According to the local stakeholder interview records in 2018, there is no complaint received from the local stakeholder. However, the project owner installed the airtight windows for the residents who needed of InfraVest Fongwei Wind Farm Project in 06/2013 and 03/2014.

[13] http://laws.cla.gov.tw/Eng/FLAW/FLAWDAT01.asp?lsid=FL014930

[14] http://laws.cla.gov.tw/Eng/FLAW/FLAWDOC01.asp?lsid=FL014930&lno=30

[15] http://www.mol.gov.tw/cht/index.php?code=list&ids=157

http://www.mol.gov.tw/upload/cht/attachment/38d4a8737f87ebfb01687c23a50440e6.doc

NTD 18,780/month since 01/01/2012; NTD 19,047/month since 01/04/2013.

[16] http://www.bli.gov.tw/en/sub.aspx?a=qlpmP7AGer8%3d

Figure F-1 The picture of the installation of the airtight windows in Fongwei Wind Farm in 03/2014

Figure F-2 The picture of the installation of the airtight windows in Fongwei Wind Farm in 06/2013

Supporting documents:

(i). The local stakeholder interview records in 2018.
(ii). The picture of the airtight windows installation
(iii). The records of the airtight windows installation

4 Biodiversity

According to the results of EIA[17], this project activity does not bring any impacts to the soil condition. However, InfraVest had made a commitment to do re-plantation of windbreaks in order to compensate on any damages caused by the construction.

The project owner has already completed replantation project. The replantation targets and the work completion progress of each area are listed as follows:

Wind Farm	Total Target Area	Completion progress
InfraVest Fongwei Wind Farm Project	6340.97	104%
InfraVest Longwei Wind Farm Project	18992.31	100%
InfraVest Chungwei Wind Farm Project	5709	100%
InfraVest Tauwei Wind Farm Project	1200	100%

[17] Changbin EIA report, Chapter 7, Section 7.1.1

Figure F-3 The re-plantation picture in InfraVest Fongwei Wind Farm

East of the wind farm	South of the wind farm
West of the wind farm	Near the wind farm (No.1)

Near the wind farm (No.7)	Near the wind farm (No.47)

Figure F-4 The re-plantation picture in InfraVest Longwei Wind Farm

Near the wind farm (No.1-5)	Full view
Near the wind farm (No.6)	Near the wind farm (No.7-10)

Figure F-5 The re-plantation picture in InfraVest Chungwei Wind Farm

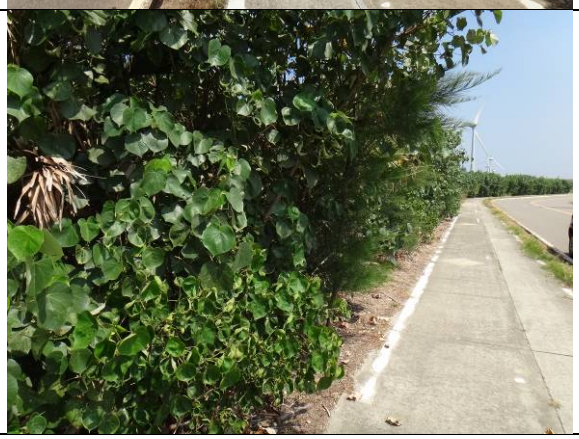

Figure F-6 The re-plantation picture in InfraVest Tauwei Wind Farm

Supporting documents:

(iv). InfraVest Fongwei Wind Farm Project: EIA commitment page from EIA amendment report dated 05/2014, Inspection records of replantation by InfraVest's personnel dated 27 /05/2014.
Letters from Forestry Bureau dated 08/08/2014, 21/08/2015, 23/03/2016, 19/10/2016, 19/10/2017 and 09/11/2018.

(v). InfraVest Longwei Wind Farm Project: EIA commitment page from EIA amendment report dated 11/2014
Letters from Forestry Bureau dated 04/02/2014, 18/02/2016, 23/12/2016, 21/12/2017 and 30/10/2018.

(vi). InfraVest Chungwei Wind Farm Project: EIA commitment page from EIA amendment report dated in 2014
Letters from Forestry Bureau dated 26/01/2015, 05/02/2016, 30/11/2016 and 01/12/2017.

(vii). InfraVest Tauwei Wind Farm Project: EIA commitment page from EIA amendment report dated 07/2009
Letters from Forestry Bureau dated 03/02/2015, 18/02/2016, 26/10/2016.

5 Landscape and visual impact

The overall color of wind tower is mainly white and the surroundings of wind towers are greened. The areas near the turbines are replanted according to the EIA report. The wind project sites of the chungwei wind farm became a popular tourist place now by the on-site interview. According to the local stakeholder interview records of 2018, there is no complaint about the landscape and visual impact.

Figure F-7 The landscape picture in InfraVest Fongwei Wind Farm

Figure F-7 The landscape picture in InfraVest Longwei Wind Farm

Figure F-7 The landscape picture in InfraVest Chungwei Wind Farm

Figure F-7 The landscape picture in InfraVest Tauwei Wind Farm

Supporting documents:

(i). Local stakeholder interview records in 2018

6 Electromagnetic interference and radiation

According to the Electromagnetic Measurement Monitoring Report by Industrial Technology Research Institute in 06/2010, the electromagnetic value of the wind turbine with 2.3 MW is 1.1 MG, which is less than the impact of the television at the same distances. It could conclude that the wind turbine electromagnetic impact of the proposed project could be ignored.

Further, there is no complaint about the electromagnetic impact according to the local stakeholder interview records in 2018.

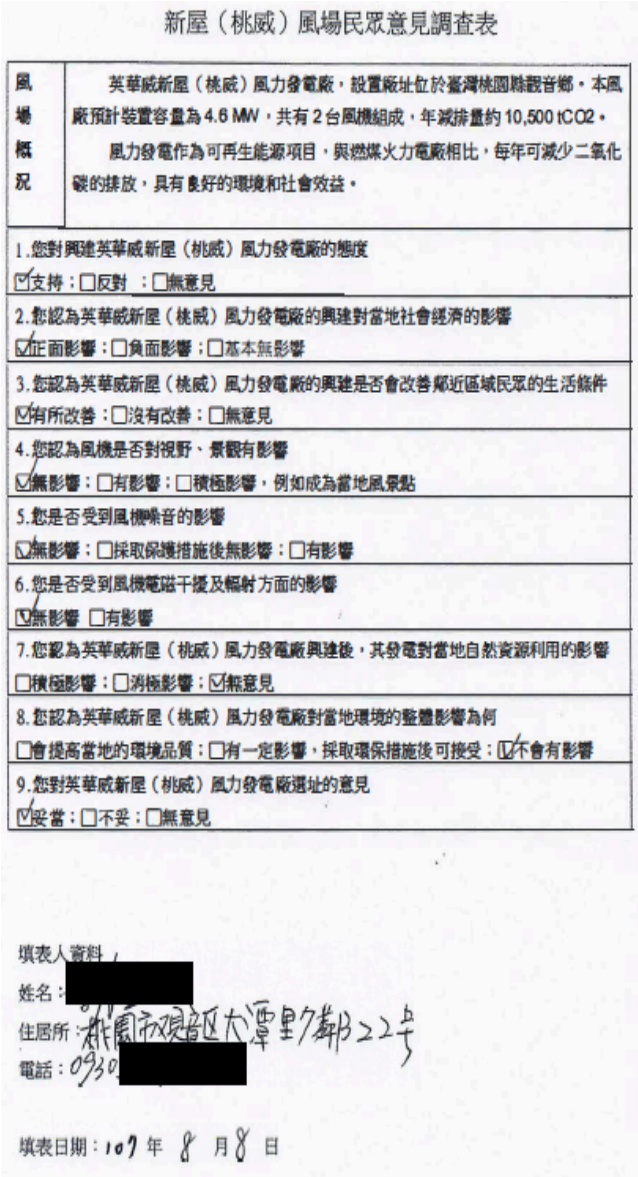

新屋（桃威）風場民眾意見調查表

風場概況	英華威新屋（桃威）風力發電廠，設置廠址位於臺灣桃園縣觀音鄉。本風廠預計裝置容量為 4.6 MW，共有 2 台風機組成，年減排量約 10,500 tCO2。 風力發電作為可再生能源項目，與燃煤火力電廠相比，每年可減少二氧化碳的排放，具有良好的環境和社會效益。

1.您對興建英華威新屋（桃威）風力發電廠的態度
☑支持；☐反對 ；☐無意見

2.您認為英華威新屋（桃威）風力發電廠的興建對當地社會經濟的影響
☑正面影響；☐負面影響；☐基本無影響

3.您認為英華威新屋（桃威）風力發電廠的興建是否會改善鄰近區域民眾的生活條件
☑有所改善；☐沒有改善；☐無意見

4.您認為風機是否對視野、景觀有影響
☑無影響；☐有影響；☐積極影響，例如成為當地風景點

5.您是否受到風機噪音的影響
☑無影響；☐採取保護措施後無影響；☐有影響

6.您是否受到風機電磁干擾及輻射方面的影響
☑無影響 ☐有影響

7.您認為英華威新屋（桃威）風力發電廠興建後，其發電對當地自然資源利用的影響
☐積極影響；☐消極影響；☑無意見

8.您認為英華威新屋（桃威）風力發電廠對當地環境的整體影響為何
☐會提高當地的環境品質；☐有一定影響，採取環保措施後可接受；☑不會有影響

9.您對英華威新屋（桃威）風力發電廠選址的意見
☑妥當；☐不妥；☐無意見

填表人資料
姓名：[redacted]
住居所：桃園市觀音區大潭里7鄰22号
電話：0930[redacted]

填表日期：107 年 8 月 8 日

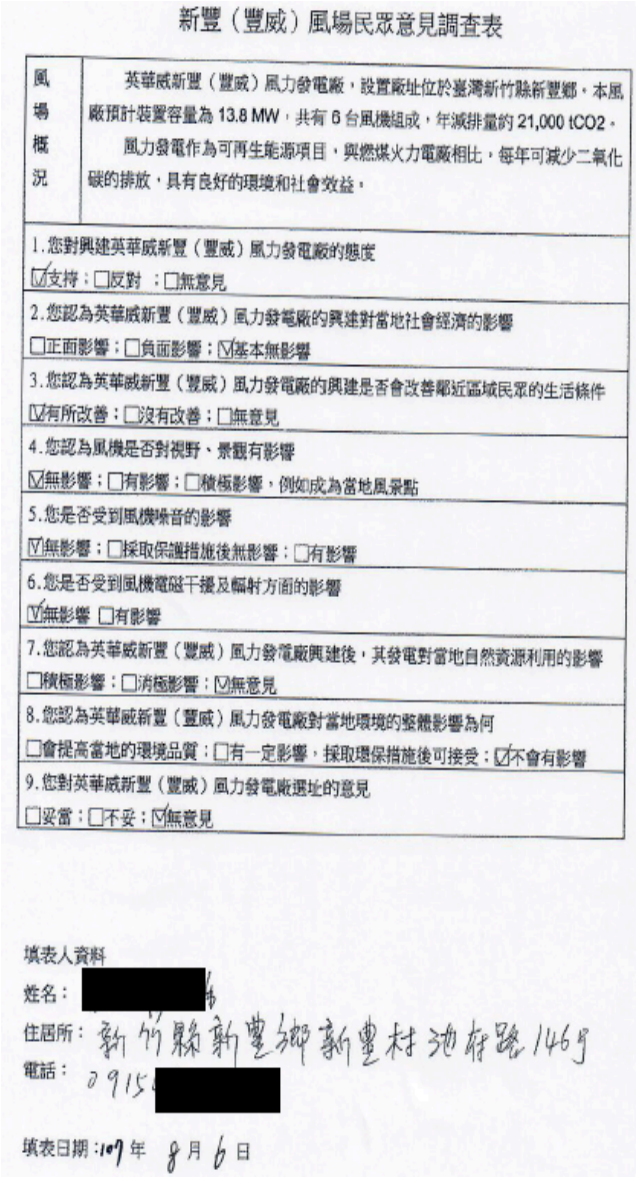

新豐（豐威）風場民眾意見調查表

風場概況	英華威新豐（豐威）風力發電廠，設置廠址位於臺灣新竹縣新豐鄉。本風廠預計裝置容量為 13.8 MW，共有 6 台風機組成，年減排量約 21,000 tCO2。 風力發電作為可再生能源項目，與燃煤火力電廠相比，每年可減少二氧化碳的排放，具有良好的環境和社會效益。

1.您對興建英華威新豐（豐威）風力發電廠的態度
☑支持；☐反對 ；☐無意見

2.您認為英華威新豐（豐威）風力發電廠的興建對當地社會經濟的影響
☐正面影響；☐負面影響；☑基本無影響

3.您認為英華威新豐（豐威）風力發電廠的興建是否會改善鄰近區域民眾的生活條件
☑有所改善；☐沒有改善；☐無意見

4.您認為風機是否對視野、景觀有影響
☑無影響；☐有影響；☐積極影響，例如成為當地風景點

5.您是否受到風機噪音的影響
☑無影響；☐採取保護措施後無影響；☐有影響

6.您是否受到風機電磁干擾及輻射方面的影響
☑無影響 ☐有影響

7.您認為英華威新豐（豐威）風力發電廠興建後，其發電對當地自然資源利用的影響
☐積極影響；☐消極影響；☑無意見

8.您認為英華威新豐（豐威）風力發電廠對當地環境的整體影響為何
☐會提高當地的環境品質；☐有一定影響，採取環保措施後可接受；☑不會有影響

9.您對英華威新豐（豐威）風力發電廠選址的意見
☐妥當；☐不妥；☑無意見

填表人資料
姓名：[redacted]
住居所：新竹縣新豐鄉新豐村池府路146号
電話：0915[redacted]

填表日期：107 年 8 月 6 日

Figure F-8 The local stakeholder interview questionnaire examples

Supporting documents:

(i). Electromagnetic Measurement Monitoring Report by Industrial Technology Research Institute in 06/2010

(ii). Local stakeholder interview records in 2018.

7. Continuous input/grievance expression mechanism

Continuous input / grievance mechanism expression method and details, as discussed with local stakeholders.

	Method Chosen (include all known details e.g. location of book, phone, number, identity of mediator)	Justification
Continuous Input / Grievance Expression Process Book	Grievance expression book in Village	kept by the leader of the villages
Telephone access	+886-2-2395-4886 (for	Phone and mobile are very common

	project owner) +41227887080 (for GS)	for local residential. Local stakeholders can call the working staff of the project owner to express their comments, suggestion and complaint.
Internet/email access	info@infra-vest.com (for project owner) info@goldstandard.org (for GS)	Local stakeholders can send email to the project owner to express their comments, suggestion and complaint.
Nominated Independent Mediator (optional)	No	This is optional

The PO has implemented continuous input / grievance mechanism expression process, as discussed with local stakeholders. No grievance was received by the end of this monitoring period.

Appendix 1. Contact information of project participants and responsible persons/entities

Project participant and/or responsible person/ entity	☒ Project participant ☐ Person/entity responsible for completing the CDM-MR-FORM
Organization name	InfraVest Wind Power Group
Street/P.O. Box	10-2F, No. 9, Sec. 2, Roosevelt Rd.
Building	
City	Taipei
State/region	
Postcode	100
Country	Taiwan
Telephone	+886 2 2395 4886
Fax	+886 2 2395 1580
E-mail	info@infra-vest.com
Website	http://www.infra-vest.com/
Contact person	Karl Eugen Feifel
Title	President
Salutation	Dr.
Last name	Feifel
Middle name	Eugen
First name	Karl
Department	
Mobile	
Direct fax	
Direct tel.	
Personal e-mail	feifel@infra-vest.com

Project participant and/or responsible person/ entity	☒ Project participant ☐ Responsible person/ entity for application of the selected methodology (ies) and, where applicable, the selected standardized baselines to the project activity
Organization name	South Pole Carbon Asset Management Ltd.
Street/P.O. Box	Technoparkstrasse 1
Building	
City	Zurich
State/Region	Zurich
Postcode	8005
Country	Switzerland
Telephone	+41 43 501 35 50
Fax	+41 43 501 35 99
E-mail	info@southpolecarbon.com
Website	www.southpolecarbon.com
Contact person	Renat Heuberger
Title	
Salutation	Mr.
Last name	Heuberger
Middle name	
First name	Renat
Department	
Mobile	
Direct fax	+41 43 501 35 99
Direct tel.	+41 43 501 35 99
Personal e-mail	r.heuberger@southpolecarbon.com