GOLD STANARD FOR THE GLOBAL GOALS （GS4GG） VERIFICATION REPORT

PROJECT TITLE: INFRAVEST TAIWAN WIND FARMS BUNDLED PROJECT 2011

GS4GG PROJECT NO.: 1001

CLIENT NAME: SOUTH POLE CARBON ASSET MANAGEMENT LTD

VERSION AND DATE: VERSION 01.1, 08/07/2020

CHINA CERTIFICATION CENTER, INC.

Floor 6 Taiji Commercial Building, No. 211 Beisihuan Zhonglu, Haidian District, Beijing, P.R. China

Project Name: InfraVest Taiwan Wind Farms Bundled Project 2011	
Certification body: China Certification Center, Inc.	
Client: South Pole Carbon Asset Management Ltd.	
Date of this revision: 08/07/2020	**Version No.**: Version 01.1
GS4GG Project No.: 1001	**Methodology Applied**: ACM0002 Version 13.0.0
Monitoring Period: 01/01/2019 to 31/12/2019 (first and last days included)	

Verification Summary:

China Certification Center, Inc. (CCCI) has performed the 4th periodic verification of InfraVest Taiwan Wind Farms Bundled Project 2011 (hereafter referred as 'the Project'), GS4GG Project Number 1001, covering the monitoring period 01/01/2019 to 31/12/2019. The verification was performed on the basis of GS4GG criteria, UNFCCC Methodology ACM0002 Version 13.0.0 , and host country criteria, as well as criteria given to provide for consistent project operations, monitoring and reporting.

The verification consisted of the following three phases: i) desk review of the project design, monitoring report and additional background documents; ii) online follow-up interviews with project stakeholders; iii) resolution of outstanding issues and the issuance of the final verification report and opinion.

CCCI has verified the project Monitoring Report Version 02 dated 06/07/2020 /2/ for the monitoring period as indicated above. CCCI confirms that the Project is implemented as described in the registered Project Design Document for Gold Standard for the Global Goals Voluntary Offset projects and its transition annex. Installed equipment being essential for generating emission reductions run reliably and are calibrated appropriately. The monitoring system is in place and the Project is generating GHG emission reductions as a GSVER project.

CCCI can confirm that the SDG impact are calculated without material misstatements. Our opinion relates to the Projects' SDG impact reported and related to the validated and registered project baseline, monitoring plan and its associated documents. Based on the evidence and information that are considered necessary to guarantee that SDG impact are appropriately calculated, CCCI confirms the following statement:

SDG13 – GHG Emission reduction impacts during this monitoring period 01/01/2019 to 31/12/2019.	161,285 tCO_2e

Work carried out by:	Team Leader: Mr. Stefan Liang Lead Verifier: Ms. Guo Jiayuan
Technical Review by:	Ms. Li Yiting
Name, position and signature of the approver of the verification report	Mr. Zhou Hong, Director of GHG Department

Abbreviations

BE	Baseline emissions
CAR	Corrective Action Request
CCCI	China Certification Center, Inc.
CDM	Clean Development Mechanism
CL	Clarification Request
CO_2	Carbon Dioxide
CO_2e	Carbon Dioxide Equivalent
DOE	Designated Operational Entity
DNA	Designated National Authority
EF	Emission factor
ETN	Electricity Transaction Note
FAR	Forward Action Request
GHG	Green House Gas(es)
GS4GG	Gold Standard for the Global Goals
IPCC	Intergovernmental Panel on Climate Change
LE	Leakage emissions
MoV	Means of Verification
MP	Monitoring Plan
MR	Monitoring report
PDD	Project Design Document
PP	Project Participant
PPA	Power Purchase Agreement
SD	Sustainable Development
TPG	TaiPower Grid
UNFCCC	United Nations Framework Convention on Climate Change
VVS	Verification and Verification Standard

Table of Contents

1. INTRODUCTION 4
1.1. Objective 4
1.2. Scope 4
1.3. GS Project Description 5
1.4. Verification Team 6

2. METHODOLOGY 6
2.1. Review of Documents 6
2.2. Remote Assessment 7
2.3. Resolution of Clarification, Corrective and Forward Action Requests 10
2.4. Internal Technical Review 10

3. VERIFICATION CONCLUSIONS 11
3.1. Assessment of remaining issues from the previous validation/verification period 11
3.2. Compliance of the project implementation with the registered project design document 12
3.3. Compliance of monitoring plan with the monitoring methodology including applicable tool and standardized baseline 12
3.4. Compliance of monitoring activities with the registered monitoring plan 13
3.5. Compliance with the calibration frequency requirements for measuring instruments 19
3.6. Assessment of data and calculation of SDG outcomes 22
3.7. Post-registration changes 25
3.8. Verification of stakeholders inputs 25

4. VERIFICATION STATEMENT 27

5. COMPETENCE OF TEAM MEMBERS AND TECHNICAL REVIEWERS 28

6. DOCUMENTS REVIEWED OR REFERENCED 29

7. CLARIFICATION REQUESTS, CORRECTIVE ACTION REQUESTS AND FORWARD ACTION REQUESTS 32

1. INTRODUCTION

South Pole Carbon Asset Management Ltd. has commissioned CCCI to verify the emission reductions of the GS4GG project “InfraVest Taiwan Wind Farms Bundled Project 2011”, for the monitoring period from 01/01/2019 to 31/12/2019, located in west Taiwan.

This report summarizes the findings of the verification of the Project, performed on the basis of Gold Standard for the Global Goals (GS4GG) requirements, UNFCCC criteria, as well as criteria given to provide for consistent project operations, monitoring and reporting.

1.1. Objective

The objective of the verification is to provide a through and independent third party assessment of the registered project activity. In particular, the assessment shall:

(a) Ensure that all sustainability development (SD) indicators and mitigation measures have been monitored and implemented in accordance with the registered PDD and transition annex;
(b) Ensure that the project activity has been implemented and operated as per the registered PDD or any approved revised PDD, and that all physical features (technology, project equipment, and monitoring and metering equipment) of the project are in place;
(c) Ensure that the monitoring report and other supporting documents provided are complete in accordance with the latest applicable version of the completeness checklist for requests for issuance of GHG emission reductions and verifiable and in accordance with applicable GS4GG requirements;
(d) Ensure that the actual monitoring systems and procedures comply with the monitoring systems and procedures described in the monitoring plan or any revised approved monitoring plan, and the approved methodology including applicable tool(s);
(e) Evaluate both quantitative and qualitative information on emission reductions provided in the project documentation;
(f) Evaluate the data collection system meets the requirements of the monitoring plan as per the applied methodology including applicable tool(s) and, where applicable, the applied standardized baseline.

1.2. Scope

The verification scope covers the relevant documents (e.g. the registered PDD including sustainable development requirements, the transition annex, the Monitoring Report, the emission reduction calculation spreadsheet, supporting documents available to the verifier and information collected through performing interviews and on-site or remote assessment, GS’s tools and guidelines publicly available, relevant rules, including the host country legislation, etc.) to be independently reviewed, the project geographical locations to be visited, the project relevant personnel to be interviewed with, and processes that are necessary to acquire objective evidence for the evaluation of the project compliance to the GS4GG verification requirements .

The above verification activities are conducted according to the GS4GG requirements. In doing so, the principles of accuracy, completeness, relevance, reliability and credibility were followed.

The verification is not meant to provide any consulting service towards the PPs. However, stated requests for clarifications and/or corrective actions may provide input for improvement of the project.

1.3. GS Project Description

The Project is a bundled project composed of four wind farms projects:

Items	Capacity	Actual implemented capacity	Location	Geo-coordinates of the center
Fongwei Wind Farm	13.8MW (6x2.3MW)	11.5MW (5x2.3MW)	Hsinfong Township, Hsinchu County	24°55'48"N 120°58'40"E
Longwei Wind Farm	44.1MW (18x2.3 MW + 3x0.9 MW)	44.1MW (18x2.3 MW + 3x0.9 MW)	Houlong Township, Miaoli County	24°36'41"N 120°44'13"E
Chungwei Wind Farm	29.9MW (13x2.3 MW), capacity addition to the existing grid-connected renewable power plant (project GS472)	29.9MW (13x2.3 MW), capacity addition to the existing grid-connected renewable power plant (project GS472)	Dajia and Da-An Townships, Taichung County	24°24'21"N 120°35'59"E
Tauwei Wind Farm	4.6MW (2x2.3 MW), capacity addition to the existing grid-connected renewable power plant (project GS612)	4.6MW (2x2.3 MW), capacity addition to the existing grid-connected renewable power plant (project GS612)	Guanyin Township (also called Hsinwu Wind Farm), Taoyuan County	25°02'43"N 121°04'21"E
Total	92.4MW	90.1MW	-	-

The Project constructed and operated by InfraVest Wind Power Group (hereafter refer as "InfraVest"). The Project in total comprises 42 wind turbines and the total installed capacity of the bundled project is 92.4 MW. At full capacity, the aggregated output of the Project is expected to be 250,866 MWh/year, which is to be delivered to the state-owned power grid, Taipower grid ("TPG"), displacing part of the electricity supplied by the power grid currently dominated by fossil fuel-fired power plants. Accordingly, the Project will lead to carbon dioxide emission reduction. The annual emission reductions are estimated as 190,908 tCO_2e/year, and

the total emission reductions for the first crediting period of 7 years are estimated as 1,336,356 tCO_2e.

Project's 1st crediting period: 01 February 2014 to 31 January 2021 (Renewable)

The Monitoring Period to be verified: 01/01/2019 to 31/12/2019 (first and last days included)

1.4. Verification Team

The verification team consists of the following personnel:

FUNCTION	NAME	TA 1.2	TASK PERFORMED*
Team Leader	Mr. Stefan Liang	☒	☒**DR** ☐**SV** ☒**RI** ☐**TR**
Lead Verifier	Ms. Guo Jiayuan	☒	☒**DR** ☐**SV** ☒**RI** ☐**TR**
Internal Technical Reviewer (ITR)	Ms. Li yiting	☒	☐**DR** ☐**SV** ☐**RI** ☒**TR**

*DR = Document Review; SV = On-site Visit; RI = Report issuance; TR = Internal Technical Review

2. METHODOLOGY

CCCI has assessed and determined that the implementation and operation of the project activity, and the steps taken to report emission reductions comply with the GS4GG criteria, rules and relevant guidance provided by the GS Foundation or CDM-EB. The assessment involved a document review of relevant documentation.

2.1. Review of Documents

A desk review of the MR (Version 01, dated 01/03/2020) /2/ and supporting documents were conducted by the verification team. The aim of the desk review of the documentation is to verify the completeness of the data and the information presented, to carry out the compliance check of the MR with respect to the monitoring plan, the applied methodology including applicable tool(s) and, where applicable, the applied standardized baseline. Particular attention was given to the frequency of measurements, the quality of the metering equipment including calibration requirements, and the quality assurance and quality control procedures. The evaluation of data management and the quality assurance and quality control system in the context of their influence on the generation and reporting of emission reductions was also conducted.

The verification team has checked for double counting by reviewing all relevant registries that could hold emission reductions from the project activity, such as CDM (http://cdm.unfccc.int), VCS (http://www.v-c-s.org/), ICAP (https://icapcarbonaction.com/zh/), and confirmed the project has not been registered as CDM project or under other voluntary carbon crediting scheme.

The additional background documents related to the registered PDD and its transition annex/1/, validation report /4/ and etc., formed the basis of the final conclusion were as presented in Section 4 of this report.

Section 6 of this report contains a complete list of all documents and proofs reviewed by the verification team.

2.2. Remote Assessment

Due to additional challenges and hardship that the COVID-19 pandemic places on verification of the project, especially the visit to Taiwan is prohibited for a person not a Taiwan local resident[*], and it is hard to estimate when the permission will be issued to visit Taiwan, an interim measure of remote audit was applied according to the RULE on COVID 19: INTERIM MEASURES section 4.1.1 b /23/. A tele/video meeting with the project owner and stakeholders was made on 17 June 2020, the verification team interviewed with the relevant personnel and verified that the actual implementation of the project was as described in the registered PDD. This includes the review of the project operation based on the presented documents.

Through the tele/video meeting, the verification team has interviewed with key personnel of the project owner and the consultancy. The detail of the on-line assessment including the interviewees and the main topics of the interview are summarized in the following table.

Date: 17/06/2020	
Person interviewed: Organization: InfraVest Wind Power Group Mr. Nils Casemiv, Operation Director Mr. Li Jianhe, Deputy Director Ms. Huang Qimin, Legal Assistant Organization: South Pole Carbon Asset Management Ltd. Yang Sui, Project Manager	
Question 1: Please briefly introduce this project and the operation status of each wind farm. Any changes from the last MP?	Response: This project involves the development of four wind farms (Fongwei, Longwei, Chungwei, Tauwei wind farms), with total installed capacity of 92.4MW. The commissioning date for Fongwei, Longwei, Chungwei, Tauwei wind farms are from 26/09/2011, 27/04/2012, 31/10/2011, and 04/07/2011 respectively. The operation of those four wind farms was normal and no emergency occurred during this monitoring period. Still one wind turbine not installed of Fongwei wind farm. No change of the design of the project occurred during this monitoring period.
Question 2: Please describe the monitoring system and data acquisition and process procedure of the Project. Any changes from the last monitoring period?	Response: The monitoring of electricity export and import was performed according to the registered monitoring plan. The total electricity exported to and imported from the grid by the project was monitored by above mentioned bidirectional meters. The readings of the meters are continuously monitored and monthly recorded by the PP and the grid company. The last day of each month is the cut-off time to calculate the monthly net electricity supplied to the grid by the Project. The grid company provided the PP with the electricity receipts monthly, which

[*] http://news.sina.com.cn/c/2020-03-18/doc-iimxyqwa1334788.shtml

	contain the electricity exported to and imported from the grid by the Project. After confirmation of the amount, the PP provided invoice to the grid company and archived the copy of these receipts. All the meters have been installed and calibrated as per relevant regulations.
Question 3: If sufficient trainings have been provided to the staff?	Response: Yes. The staffs here have accepted a series of trainings on the Theory and practice of first-aid, Taiwan Electricity Act & Renewable Energy Development Act, etc. These trainings have demonstrated the improvement of employment quality.
Question 4: How many jobs have been created? And were labor conditions in compliance with local labor laws and regulations?	Response: There are total 49 long-term work positions created with this project. The labor conditions, including working hours and salary, have been ensured to comply with local relevant laws and regulations.
Question 5: Are there any measures taken to mitigate the soil erosion caused by soil disturbance during the construction period?	Response: The re-plantation in the project area was performed, which can be observed onsite. The vegetation cover has been maintaining on the regular basis by the local government.
Question 6: Any changes to the metering system, like electricity meter change?	Response: Yes. The meter has been changed and detailed in the monitoring report.

Date: 17/06/2020	
Stakeholders interviewed: Mr. Bai Yintang, Villager, Qingshui District, Taichung County Mr. Bai Heyang, Villager, Qingshui District, Taichung County Ms. Yang Zihan, Villager, Qingshui District, Taichung County Mr. Chen Binghuang, Villager, Da'an District, Taichung County Mr. Zhuang Mingliang, Villager, Da'an District, Taichung County Mr. Wang Shengzong, Villager, Da'an District, Taichung County Mr. Chen Taiyuan, Villager, Da'an District, Taichung County Mr. Lin Gong, Villager, Da'an District, Taichung County Mr. Hong Zhengyi, Villager, Da'an District, Taichung County Ms. Chen lijuan, Villager, Da'an District, Taichung County	
Question 1: What is your opinion about the impact (positive and negative) of the Project? eg. air quality, noise, electromagnetic interference radiation and etc.	Response: The construction of wind farms is friendly to the environment since it is clean energy and it replaces coal fired power plant. The impact of the noise is minor. No noise is heard as the WTGs runs as the households live not that near to the wind turbine. The signal of mobile phone is not affected by the operation. No impact has been experienced.
Question 2: Are there any measures taken to mitigate the soil erosion caused by soil	Response: The re-plantation in the project area was performed by the Project Developer, which can be observed onsite. The vegetation cover has been maintaining on the regular basis by the

disturbance during the construction period?	government.
Question 3: Does the project contribute to the local society in a sustainable way?	Response: Yes, the project generates clean energy. It also creates working opportunities for the local society, such as security guard.
Question 4: Do you support the Project, and any other comments on the Project?	Response: Yes, I support the project, the project developer is clean energy and be good to the air quality, and I have no more comments on the project.
Question 5: Any changes occurred during 2019 of the project?	Response: No wind turbine erected or torn down realized in 2019.

Alternative means used and justification that they are sufficient for the audit due to COVID 19:

The onsite assessment for the project implementation activities and monitoring activities generally includes:

(a) Onsite inspection of the project implementation, including the key power generation units to confirm the compliance of the project implementation with the registered PDD;

(b) Onsite inspection of the project monitoring system, including the monitoring devices, the change of meters, to confirm compliance of monitoring activities with the registered monitoring plan;

(c) Interview the stakeholders about the implementation of the project activities, the comments to the SDG indicators implementation and the comments to the project activity.

The alternative (remote) means and justification used for the audit of the items listed above are:

(a) The verification of the project implementation. The verification team confirms the project implementation is in line with the registered PDD, including key power generation units (wind turbines), by means of: 1) the team online interview the operation staffs of the project owner and stakeholders live nearby, that no wind turbine was erected or torn down during 2019; 2) the team checked the sample pictures of the project, and confirms the wind turbines are operated; 3) the team checked the monthly electricity export receipts and confirms the wind turbine operated continuously and no abnormal condition observed; 4) the team compares the electricity export and import for the years of 2017-2019, no abnormal condition or over-charge of ER is observed in year 2019.

Monitoring period	Electricity export/kWh	Electricity import/kWh
2017	212,468,138	535,829
2018	197,378.385	518.761

2019	212,359,223	419,874

(b) The verification of the project monitoring system. The verification team confirms the monitoring activities was in line with the registered monitoring plan, including key monitoring devices, by means of: 1) the team checked the receipts of electricity export and import, and confirmed the number of transaction point is same as that of the prior monitoring period and in PPA, and the electricity serial number is in line with the those indicated in the receipts. 2) the team also checked the receipt and confirmed the reading number of the meters are continuous during 2019. The meter change info has been correctly indicated in the MR, by checking the meter change record and serial number of the changed meter in the receipts. As the receipts and invoice are the basis of money transaction and tax payment of the power export and import, which were issued or confirmed by the grid company and project owner, therefore, the check of all invoice and receipts by the team re-insures the credibility of the emission reductions calculation.

(c) Interview the stakeholders. The verification team remotely interviewed the stakeholders by means of online chatting APP, through audio and video means, the comments to the SDG indicators implementation and the comments to the project activity are listed above. The remote interview has no materially difference with the onsite interview.

The above listed alternative means used and justification confirms the remote assessment instead of onsite assessment are sufficient for the audit due to COVID 19.

2.3. Resolution of Clarification, Corrective and Forward Action Requests

The objective of this phase of the verification is to resolve identified issues that require further elaboration, research or expansion prior to CCCI's positive conclusion on the project implementation, monitoring practices and achieved emission reductions.

A Corrective Action Request (CAR) is raised, if one of the following situations occurs:

(a) Non-conformities with the monitoring plan, the methodology or the standardized baseline are found in monitoring and reporting and has not been sufficiently documented by the project participants, or if the evidence provided to prove conformity is insufficient;

(b) Modifications to the implementation, operation and monitoring of the registered project activity has not been sufficiently documented by the project participants;

(c) Mistakes have been made in applying assumptions, data or calculations of emission reductions which will impair the estimate of emission reductions;

(d) Issues identified in a FAR during validation or previous verification to be verified during verification have not been resolved by the project participants.

A Clarification Request (CL) is raised, if information is insufficient or not clear enough to determine whether the applicable requirements have been met.

A Forward Action Request (FAR) may also be raised during verification for actions if the monitoring and reporting require attention and/or adjustment for the next verification period.

2.4. Internal Technical Review

The verification report underwent an Internal Technical Review (ITR) before requesting issuance of CERs/VERs for the project activity.

The ITR is an independent process performed to examine thoroughly that the process of verification has been carried out in conformance with the requirements of the verification scheme as well as internal CCCI procedures.

The Team Leader provides a copy of the verification report to the reviewer, including any necessary verification documentation. The reviewer reviews the submitted documentation for conformance with the verification scheme. This will be a comprehensive review of all documentation generated during the verification process.

When performing an Internal Technical Review, the reviewer ensures that:

- The verification activity has been performed by the team by exercising utmost diligence and complete adherence to the CDM/GS4GG rules and requirements.
- The review encompasses all aspects related to the project which includes project implementation, monitoring report and emission reduction calculations, internal quality assurance systems of the project participant as well as the project activity, closure of CARs and CLs during the verification exercise, review of sample documents.

The reviewer may raise Clarification Requests to the verification team and will discuss these matters with the Team Leader.

After the agreement of the responses to the Clarification Requests from the verification team as well as the PP(s), the finalized verification report is accepted for further processing.

3. VERIFICATION CONCLUSIONS

In the following sections, the conclusions of the verification are stated.

The findings from the desk review of the original monitoring report and the findings from interviews during the online interview are described in this section of the report.

3.1. Assessment of remaining issues from the previous validation/verification period

The Verification Team checked the previous validation/verification reports /4/, the verification team found one remaining issues were identified in the validation process:

FAR-1 *Wind turbine ID numbers and meters to be installed will be clearly described in sections A.1 and B.7.3 and Figure B-1.*

The verification team has checked the monitoring report, and confirmed the wind turbine ID numbers and meters installed has been clearly described in the MR.

And the construction of the last one wind turbine generator in the Fongwei wind farm has not been started at the time of this verification, and the WTG ID and meters added (if any) will be listed in the MR then. Thus, the FAR will be closed as the Project fully operated.

3.2. Compliance of the project implementation with the registered project design document

Means of verification	Due to no site visit was conducted, the verification team has performed document review and remote audit to verify if: a) All physical features (technology, project equipment, and monitoring and metering equipment) of the registered GS4GG project activity are in place. b) The PP has operated the project as per the registered PDD. c) Information (data and variables) provided in the monitoring report that is different from that stated in the registered PDD, and has caused an increase in estimates of the emission reductions in the current monitoring period or is highly likely to increase the estimates of emission reductions in the future monitoring periods. By document review and stakeholders interview, the verification team: • Checked the Electricity line diagram/12/, and cross-checked it against the Power Purchase Agreement /13/ • Checked the exampled pictures of installed equipment, including the monitoring instruments and wind turbines, their specifications, and cross-checked them against the PDD /1/, monitoring plan/1/, and the monitoring report /2/; • Interviewed the operation staff of the project owner and the residentials nearby. • Interviewed the staff responsible for the monitoring and implementation of the project; • Reviewed the project webpage on the GS4GG website; • Reviewed the relevant training materials and training records /9/; • Reviewed the electricity receipts /11/.
Findings	No findings raised in this section.
Conclusion	The verification team confirms that: ✓ all physical features of the project activity have been fully implemented in accordance with the registered PDD /1/ and the monitoring equipment was installed as described in the registered PDD /1/; ✓ The actual operation of the GS4GG project activity is implemented as per the registered PDD /1/ by the PP; ✓ Information (data and variables) provided in the monitoring report is in accordance with that stated in the registered PDD /1/.

3.3. Compliance of monitoring plan with the monitoring methodology including applicable tool and standardized baseline

Means of	The verification team has checked the monitoring plan in the registered

verification	PDD and its transition annex/1/ against the GS4GG requirements, monitoring methodology ACM0002 Version 13.0.0 and applicable tools.
Findings	No findings raised in this section.
Conclusion	The verification team confirms that the monitoring plan in the registered PDD and its transition annex /1/, including data and parameters which are required to be monitored, monitoring and reporting procedures, measuring instruments, QA/QC procedures, complies with the applied monitoring methodology.

3.4. Compliance of monitoring activities with the registered monitoring plan

Overview of monitoring system

By reviewing the Electricity line diagram /12/, the verification team confirmed the monitoring system as bellow, which is in compliance with the revised PDD /1/:

The monitoring system is established to monitor the Quantity of net electricity generation supplied to the Grid by the project activity in year y ($EG_{facility,y}$) and the Quantity of net electricity generation supplied to the grid in year y by the project plant/unit that has been added under the project activity ($EG_{PJ_Add,y}$). For the determination of $EG_{facility,y}$ and $EG_{PJ_Add,y}$, $EG_{Export,y}$ and $EG_{Import,y}$ shall be measured:

$EG_{facility,y}= EG_{Export,y} - EG_{Import,y}$ (for Fongwei and Longwei Wind Farms)

$EG_{PJ_Add,y}= EG_{Export,y} - EG_{Import,y}$ (for Chungwei and Tauwei Wind Farms)

Where

$EG_{Export,y}$ = Quantity of electricity generation supplied by the project plant/unit to the grid in year y (MWh/y).

$EG_{Import,y}$ = Quantity of electricity consumption of the project plant/unit from the grid in year y (MWh/y)

$EG_{Export,y}$ and $EG_{Import,y}$ are measured continuously by the bi-directional meters installed at the wind farms switchrooms, which are owned and supervised by Taipower. The meters locations and numbers of meters used for each wind farm are listed as below:

Fongwei Wind Farm:

Two bi-directional electricity meters are located in Fongwei wind farm 11.4 kV Switchroom, before connection to Taipower 11.4 kV grid at SongLin S/S Substation.

Longwei Wind Farm:

One bi-directional electricity meter is located in Longwei wind farm 69 kV Switchroom, primary side of the 22.8kV/69kV Transformer, and before connection to the Gongguan-Miaozi 69 kV line #1 connection station; and the other two meters are installed in Longwei wind farm 11.4 kV Switchroom, before connection to Taipower 11.4 kV grid at HouLong S/S Substation.

Chungwei Wind Farm:

One bi-directional electricity meter is located in Chungwei wind farm 22.8 kV Switchroom, after the 22.8kV/69kV Transformer and before connection to Taipower 69 kV grid.

Tauwei Wind Farm:

One bi-directional electricity meter is located in Tauwei wind farm switchroom, before the electricity generated by Tauwei is connected with Guanyin wind farm, then to Taipower 161 kV grid.

Please refer to the below diagrams for an overview on how the project activity is connected to the grid, and the location of the meters.

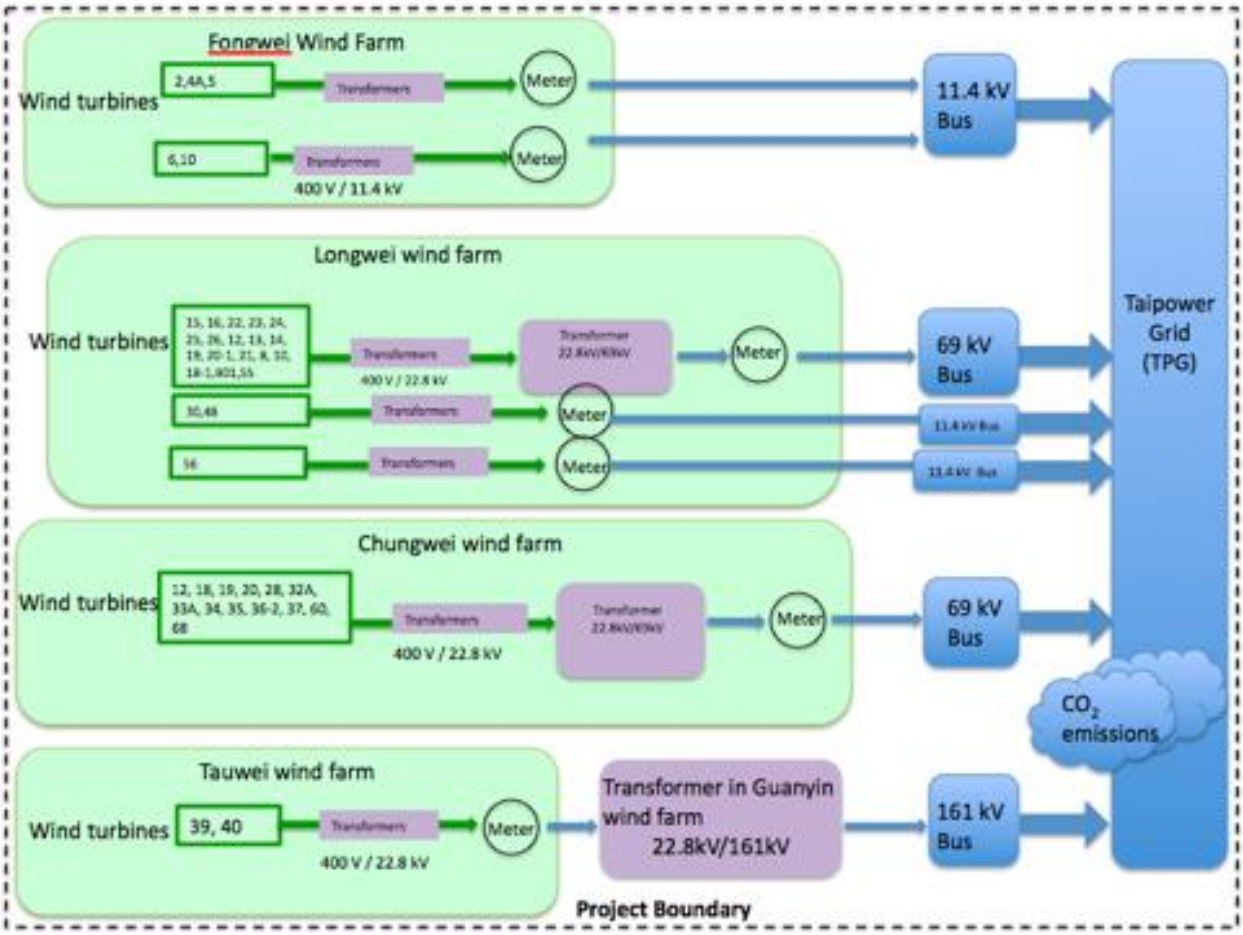

Data and parameters fixed ex ante or at renewal of crediting period

Data/parameter	Combined baseline emission factor ($EF_{grid, CM, y}$)
Means of verification	The data and parameter fixed is combined emission factor of TPG, which has been determined ex-ante in the registered PDD. The value of this parameter has been checked against the registered PDD /1/.
Findings	No findings raised in this section.
Conclusion	The verification team confirms that the data and parameters fixed ex ante have been sufficiently monitored and correctly listed.

Data and parameters monitored

Relevant SDG Indicator/Safeguarding Principle	SDG Indicator 7.2.1: Renewable energy share in the total final energy consumption
Data/parameter	Quantity of net electricity generation supplied by the project plant/unit to the grid in year y; and ($EG_{facility,y}$), Quantity of net electricity generation supplied to the grid in year y by the project plant/unit that has been added under the project activity ($EG_{PJ_Add,y}$), Calculated by the difference of $EG_{export,y}$-$EG_{import,y}$ $EG_{export,y}$ (Quantity of electricity generation supplied by the project plant/unit to the grid in year y) $EG_{import,y}$ (Quantity of electricity consumption of the project plant/unit from the grid in year y)
Means of verification	Measurement/reading/recording frequency The monitoring plan /1/ requires this parameter to be continuously monitored and recorded monthly. The verification team checked the revenue meters, reviewed the monthly reports /10/ and confirmed that the measurements were continuously measured and recorded monthly as required by the monitoring plan /1/. QA/QC procedures applied QA/QC procedures conducted was verified via interviews with key personnels and review of following documents: • Monitoring Manual /14/ • Training records of the staffs /9/ • Monthly reports /10/ • electricity receipts /11/ • Meter calibration reports /16/ • Technical Specification for Verification and Inspection of Electricity Meters (Regulation No. CNMV 46) /19/ $EG_{facility,y}$/ $EG_{PJ_Add,y}$ is cross-checked against relevant electricity sales and purchase receipts /11/ from the grid for quality control. Calibration of Meters & Metering is implemented according to the Technical Specification for Verification and Inspection of Electricity Meters (Regulation No. CNMV 46)/19/. The verification team confirmed that the QA/QC procedures applied is in accordance with the monitoring plan/1/. Information flow The flow of information from data generation, aggregation, to recording, calculation and reporting was verified by interviews with the key personnels and review of following documents: • Power Purchase Agreement /13/ • Monitoring Manual /14/ • Monthly reports /10/ • electricity receipts /11/ Data generation: The bidirectional meters with accuracy class of 0.5 were installed at the wind farms' switchrooms for monitoring Electricity Export ($EG_{Export,y}$) and Electricity Import ($EG_{Import,y}$).

	Data recording: Readings from the meters were recorded remotely and digitally at the TPG's office (The Grid). The cut-off time of $EG_{Export,y}$ and $EG_{Import,y}$ is the last day of every month. After the digital data were incorporated into monthly electricity receipts, TPG sent the monthly electricity receipt to InfraVest (the project owner) for confirmation on the amount of both electricity exported and imported. After confirmation from InfraVest, the confirmed electricity exported to the grid was then considered as the basis on which TPG conducts the payment to InfraVest for purchasing electricity generated by the project, and InfraVest sent the invoice to TPG; the confirmed electricity imported is then considered as the basis on which InfraVest conducts the payment to TPG for electricity imported from TPG by the project, and TPG sent the invoice to InfraVest. The ER calculation is based on the electricity data in electricity receipts that are derived from the meter reading records. Data aggregation and calculation: $EG_{Export,y}$ is calculated by sum the electricity exported per month measured by the revenue meters over the monitoring period; $EG_{Import,y}$ is calculated by sum the electricity imported per month measured by the revenue meters over the monitoring period. $EG_{facility,y}$/ $EG_{PJ_Add,y}$ is calculated by: $EG_{facility,y}$/ $EG_{PJ_Add,y}$ = $EG_{Export,y}$ - $EG_{Import,y}$ Data reporting: Before the data being archived, these records are checked by the Operation Department Office of InfraVest to ensure the correctness.
Findings	No findings raised in this section.
Conclusion	The verification team confirms that: ✓ The monitoring has been carried out in accordance with the monitoring plan contained in the registered PDD /1/. ✓ The parameter required by the monitoring plan have been sufficiently monitored and correctly listed.

Relevant SDG Indicator/Safeguarding Principle	SDG Indicator 8.5.1 Average hourly earnings of female and male employees, by occupation, age and persons with disabilities.
Data/parameter	Employment numbers
Means of verification	The monitoring plan /1/ requires this parameter to be annually monitored based on HR records. The copy of employment contracts and health and labor insurance records /7/ have been checked. It could be confirmed that 49 persons were employed during the operation period of the Project at the time of verification. The verification team has checked relevant training records /9/, the training covered skills for Theory and practice of Basic Life Support and Emergency evacuation and fire-fighting, etc. The verification team confirms that relevant trainings have been conducted during

	the monitoring period. By interview the working staffs, checking the Internal Regulations /21/, Labor Insurance List /7/, Health Insurance List /7/, and Local Welfare Regulations /22/, the verification team confirmed: 1.The working hours specified in the Internal Regulations /21/ is in compliance with the local Labor Standard Act /22/. 2.The welfare, salaries and Labor insurance witnessed are in compliance with the local Labor Standard Act /22/.
Findings	No findings raised in this section.
Conclusion	The verification team confirms that: ✓ The monitoring has been carried out in accordance with the monitoring plan contained in the registered PDD /1/. ✓ The parameter required by the monitoring plan have been sufficiently monitored and correctly listed.

Relevant SDG Indicator/Safeguarding Principle	SDG Indicator 13.B.1: Number of least developed countries and small island developing States that are receiving specialized support, and amount of support, including finance, technology and capacity-building, for mechanisms for raising capacities for effective climate change-related planning and management, including focusing on women, youth and local and marginalized communities.
Data/parameter	ER_y - Emission reduction in year y
Means of verification	The monitoring plan /1/ requires this parameter to be ex-post calculated according to the registered PDD description. For verification of calculation of ER, please refer to section 3.6 of this report.
Findings	No findings raised in this section.
Conclusion	The verification team confirms that: ✓ The monitoring has been carried out in accordance with the monitoring plan contained in the registered PDD /1/. ✓ The parameter required by the monitoring plan have been sufficiently monitored and correctly listed.

Relevant SDG Indicator/Safeguarding Principle	Safeguarding Principle 3 – Environment, ecology and land use
Data/parameter	Air Quality
Means of verification	The monitoring plan /1/ requires this parameter to be calculated annually, based on SOx, NOx and TSP averaged emission factors publicly announced by the grid. According to Taipower's latest announcement /20/, an average of 0.125 ton/GWh SOx, 0.158 ton/GWh NOx and 0.014 ton/GWh TSP emissions were generated by electricity produced in 2019. The total net electricity delivered to the grid by the Project during this monitoring period is 211,939,349 kWh, which means that the Project has mitigated approximately of 26.49 tonnes SOx, 33.49 tonnes NOx and 2.97 tonnes TSP emissions.
Findings	No findings raised in this section.

Conclusion	The verification team confirms that: ✓ The monitoring has been carried out in accordance with the monitoring plan contained in the registered PDD /1/. ✓ The parameter required by the monitoring plan have been sufficiently monitored and correctly listed.

Relevant SDG Indicator/Safeguarding Principle	Safeguarding Principle 3 – Environment, ecology and land use
Data/parameter	Other pollutants
Means of verification	The monitoring plan /1/ requires this parameter to be monitored annually base on interview records. By remote interviewing the local stakeholder and checked the interview records/6/, the verification team confirmed: 1) The impact of the noise is minor. No noise is heard as the WTGs runs. 2) The project owner has installed airtight windows for the residents who live close to wind farm in 2013 and 2014.
Findings	No findings raised in this section.
Conclusion	The verification team confirms that: ✓ The monitoring has been carried out in accordance with the monitoring plan contained in the registered PDD /1/. ✓ The parameter required by the monitoring plan have been sufficiently monitored and correctly listed.

Relevant SDG Indicator/Safeguarding Principle	Safeguarding Principle 3 – Environment, ecology and land use
Data/parameter	Biodiversity
Means of verification	The monitoring plan /1/ requires this parameter to be monitored annually. The verification team has checked the Inspection records of replantation and Maintenance statement issued by Forestry Bureau /8/ in the previous verification, the verification confirmed the normal conservations of re-plantation were well implemented. The team also remotely interview the stakeholders and confirms the re-plantation was maintained by the local government.
Findings	No findings raised in this section.
Conclusion	The verification team confirms that: ✓ The monitoring has been carried out in accordance with the monitoring plan contained in the registered PDD /1/. ✓ The parameter required by the monitoring plan have been sufficiently monitored and correctly listed.

Relevant SDG Indicator/Safeguarding Principle	Safeguarding Principle 3 – Environment, ecology and land use
Data/parameter	Landscape and visual impact
Means of verification	The monitoring plan /1/ requires this parameter to be monitored annually by checking interview records.

	By remote interviewing the local stakeholder and checked the interview records/6/, also checked the pictures of the wind turbines, the verification team confirmed the overall color of wind tower is mainly white and the surroundings of wind towers are greened.
Findings	No findings raised in this section.
Conclusion	The verification team confirms that: ✓ The monitoring has been carried out in accordance with the monitoring plan contained in the registered PDD /1/. ✓ The parameter required by the monitoring plan have been sufficiently monitored and correctly listed.

Relevant SDG Indicator/Safeguarding Principle	Safeguarding Principle 3 – Environment, ecology and land use
Data/parameter	Electromagnetic interference and radiation
Means of verification	The monitoring plan /1/ requires this parameter to be monitored annually by checking interview records. By remote interviewing the local stakeholder and checked the interview records/6/, the verification team confirmed there is no complaint about the electromagnetic impact.
Findings	No findings raised in this section.
Conclusion	The verification team confirms that: ✓ The monitoring has been carried out in accordance with the monitoring plan contained in the registered PDD /1/. ✓ The parameter required by the monitoring plan have been sufficiently monitored and correctly listed.

3.5. Compliance with the calibration frequency requirements for measuring instruments

Means of verification

Measuring instruments

As per the PDD/1/ and monitoring report /2/, the information of the meters is summarised below:

Serial number	Location	Accuracy Class	Meter use vintage
18080240	located in Fongwei wind farm 11.4 kV Switchroom, before connection to Taipower 11.4 kV grid at SongLin S/S Substation	0.5	01/01/2019 to 31/12/2019
18080247	located in Fongwei wind farm 11.4 kV Switchroom, before connection to Taipower 11.4 kV grid at SongLin S/S	0.5	01/01/2019 to 31/12/2019

	Substation		
15001372	installed in Longwei wind farm 11.4 kV Switchroom, before connection to Taipower 11.4 kV grid at HouLong S/S Substation	0.5	01/01/2019 to 31/12/2019
15001382	installed in Longwei wind farm 11.4 kV Switchroom, before connection to Taipower 11.4 kV grid at HouLong S/S Substation	0.5	01/01/2019 to 31/12/2019
12941313	located in Longwei wind farm 69 kV Switchroom, primary side of the 22.8kV/69kV Transformer, and before connection to the Gongguan-Miaozi 69 kV line #1 connection station	0.5	01/01/2019 to 31/12/2019
12941317	located in Chungwei wind farm 22.8 kV Switchroom, after the 22.8kV/69kV Transformer and before connection to Taipower 69 kV grid	0.5	01/01/2019 to 31/12/2019
11943540	located in Tauwei wind farm switchroom, before the electricity generated by Tauwei is connected with Guanyin wind farm, then to Taipower 161 kV grid	0.5	Use until Oct 2019
19702302	located in Tauwei wind switchroom, before the electricity generated by Tauwei is connected with Guanyin wind farm, then to Taipower 161 kV grid	0.5	Use from Oct 2019

The verification team checked the meter change record /15/ and confirm the meter 11943540 changed to meter 19702302 in Oct 2019.

The verification team confirmed the accuracy class is in line with the Technical Specification for Verification and Inspection of Electricity Meters (Regulation No. CNMV 46) /19/. All aspects of the installation of the meters and the monitoring procedures were found to be consistent with the monitoring plan /1/. The verification team checked the change records of above-mentioned revenue meters/15/, and confirms the meter change info is correctly presented in the monitoring report.

Calibration
As per the PDD /1/ and the applicable standard Technical Specification for Verification and Inspection of Electricity Meters (Regulation No. CNMV 46) /19/, the official period of validity for the calibration of electronic electricity meter as used in this project is defined as 8 years. The verification team confirmed based on review of calibration records /16/. Detailed information as below:

Serial number	Accuracy Class	Calibrated by	Date of calibration	Valid until (date)
18080240	0.5	Taiwan Electric Research and Testing Center	20/08/2018	19/08/2026
18080247	0.5	Taiwan Electric Research and Testing Center	20/08/2018	19/08/2026
15001372	0.5	Taiwan Electric Research and Testing Center	09/11/2015	08/11/2023
15001382	0.5	Taiwan Electric Research and Testing Center	09/11/2015	08/11/2023
12941313	0.5	Taiwan Electric Research and Testing Center	18/12/2012	17/12/2020
12941317	0.5	Taiwan Electric Research and Testing Center	18/12/2012	17/12/2020
11943540	0.5	Taiwan Electric Research and Testing Center	14/12/2011	13/12/2019
19702302	0.5	Taiwan Electric Research and Testing Center	26/08/2019	25/08/2027

These meters were calibrated by Taiwan Electric Research and Testing Center. As per the Accreditation Authorization /18/ issued by the Bureau of Standards, Metrology and Inspection (BSMI), Taiwan Electric Research and Testing Center is qualified to conduct calibrations for electricity meters with the accuracy class of 0.5.

Findings

The calibration validity of the meter 19702302 was wrongly indicted in the

	MR version 01. The CAR 1 is therefore raise. The verification team checked the revised MR, the calibration info has been correctly indicated. The CAR is therefore closed.
Conclusion	The verification team confirms that: ✓ The equipment for monitoring has an appropriate accuracy and has been controlled and operated in accordance with the monitoring plan of the registered PDD /1/. ✓ The calibration has been conducted at the frequency as specified by the methodology and the monitoring plan of the registered PDD /1/.

3.6. Assessment of data and calculation of SDG outcomes

Calculation of baseline GHG emissions

Means of verification	The verification team has verified the baseline emissions by: (a) Desk review on the monthly reports /10/, and electricity receipts /11/, to verify that a complete set of data for the specified monitoring period is available; (b) Information provided in the monitoring report has been cross-checked with other sources such as the monthly reports /10/, and electricity receipts /11/; (c) Review the calculations of baseline GHG emissions have been carried out in accordance with the formulae and methods described in the monitoring plan /1/, and the methodology ACM0002 Version 13.0.0 /5/; (d) Review combined baseline emission factor ($EF_{grid, CM, y}$), IPCC default values, GWPs and other reference values as per the registered PDD /1/; The baseline emissions are the baseline grid emission factor ($EF_{grid, CM, y}$) times the Quantity of net electricity generation supplied to the Grid by the project activity in year y ($EG_{facility,y}$) or the Quantity of net electricity generation supplied to the grid in year y by the project plant/unit that has been added under the project activity ($EG_{PJ_Add,y}$): $BE_y = EG_{facility,y} * EF_{grid,CM,y}$ (for Fongwei and Longwei Wind Farms) $BE_y = EG_{PJ_Add,y} * EF_{grid,CM,y}$ (for Chungwei and Tauwei Wind Farms) $EG_{facility,y}$/ $EG_{PJ_Add,y}$ is calculated by: $EG_{facility,y}$/ $EG_{PJ_Add,y} = EG_{Export,y} - EG_{Import,y}$ Data for $EG_{Export,y}$ and $EG_{Import,y}$ for the period from 01/01/2019 to 31/12/2019 in the MR /2/ and the emission reduction calculation sheet /3/ has been checked to be consistent against the values in the monthly reports /10/, and electricity receipts /11/. The magnification factor for the electricity meters has also been confirmed to be correct by reviewing the electricity receipts /11/. The electricity consumed and electricity exported for each wind farm is confirmed as:

Wind Farm	$EG_{Export,y}$	$EG_{Import,y}$	$EG_{facility,y}$

	(MWh/year)	(MWh/year)	$EG_{PJ_Add,y}$ (MWh/year)
Fongwei	30,428.378	19.200	30,409.178
Longwei	105,456.365	179.200	105,277.165
Chungwei	64,352,327	212.800	64,139.527
Tauwei	12,122.153	8.674	12,113.479
Total	212,359,223	419,874	211,939.349

The total quantity of $EG_{facility,y}$/ $EG_{PJ_Add,y}$ for Vintage of 01/01/2019 to 31/12/2019, and the calculation of this is clearly presented in the emission reduction (ER) spreadsheet /3/. Hence, the baseline emissions of the project are confirmed by the verification team to be:

Period	$EG_{export,y}$ (kWh)	$EG_{import,y}$ (kWh)	$EG_{facility,y}$ and $EG_{PJ_Add,y}$ (kWh)	$EF_{grid, CM, y}$ (tCO_2e/MWh)	BE_y (tCO_2e)
01/01/2019 to 31/12/2019	212,359,223	419,874	211,939,349	0.761	161,285

Findings	No findings raised in this section.
Conclusion	The verification team confirms that: ✓ A complete set of data for the monitoring period is available; ✓ Information on the baseline GHG emission calculation provided in the monitoring report has been cross-checked with other sources; ✓ Calculations of baseline emissions have been carried out in accordance with the formulae and methods described in the monitoring plan and the applied methodology document; ✓ There are no assumptions in emission calculations; ✓ Appropriate emission factor, IPCC default values, GWPs and other reference values have been correctly applied.

Calculation of project GHG emissions (PE_y)

Means of verification	The verification team has reviewed the calculation of project GHG emission as per the registered PDD /1/ and the applied methodology /5/. The project is a wind farm project, therefore the GHG emission of the project is zero according to ACM0002 Version 13.0.0 .
Findings	No findings raised in this section.
Conclusion	The verification team confirms that the GHG emission of the project is zero, which is consistent with methodology ACM0002 Version 13.0.0 .

Calculation of leakage GHG emissions

Means of verification	The verification team has reviewed the leakage calculation as per the registered PDD /1/ and the applied methodology /5/. No leakage needs to be considered according to ACM0002 Version 13.0.0 .
Findings	No findings raised in this section.
Conclusion	The verification team confirms that no leakage needs to be considered,

	which is consistent with methodology ACM0002 Version 13.0.0 .

Summary of calculation of GHG emission reductions (ER_y)

Means of verification	The verification team has reviewed the calculation of GHG emission reductions in the MR /2/ and emission reduction calculation spreadsheet /3/. As per the registered PDD and the applied methodology, GHG emission reductions were calculated by: $ER_y = BE_y - PE_y$. The emission reductions during the monitoring period from 01/01/2019 to 31/12/2019 are calculated as:

Monitoring Period	BE_y (tCO_2e)	PE_y (tCO_2e)	ER_y(tCO_2e)
01/01/2019 to 31/12/2019	161,285	0	161,285

Findings	No findings.
Conclusion	The verification team confirms that: ✓ A complete set of data for the monitoring period is available; ✓ Information on the baseline GHG emission calculation provided in the monitoring report has been cross-checked with other sources; ✓ Calculations of baseline emissions have been carried out in accordance with the formulae and methods described in the monitoring plan and the applied methodology document; ✓ There are no assumptions in emission calculations; ✓ Appropriate emission factor, IPCC default values, GWPs and other reference values have been correctly applied.

Comparison of actual GHG emission reductions with estimates in registered PDD

Means of verification	The comparison of actual GHG emission reductions with estimates in registered PDD /1/ has been checked and re-calculated by the verification team. The annual estimated emission reductions are 190,908 tCO_2e as per the registered PDD/1/. The actual operation days of the Project in the monitoring period are 365 days. The actual installed capacity is 90.1MW, comparing to 92.4MW in the registered PDD. The corresponding estimate in the monitoring period are 186,155 tCO_2e = 190,908 *90.1/92.4*365/365 tCO_2e. The actual emission reductions are 161,285 tCO_2e, which is 13.36% lower than the estimated value in the monitoring period (13.36% = (186,155 - 161,285)/ 186,155).
Findings	No findings raised in this section.
Conclusion	The actual emission reductions are 13.36% lower than the estimated value in the monitoring period.

Remarks on difference from estimated value in registered PDD

Means of verification	The verified emission reductions are 13.36% lower than the estimated value in the monitoring period.
Findings	No findings raised in this section.
Conclusion	The verified emission reductions are less than the estimated value in the

	monitoring period. Thus, no remarks need to be provided in the MR.

Verification of other SDG outcomes

Means of verification	The verification team has reviewed the monitoring report and confirms the SDG outcome of SDG 7 and SDG8 and Safeguarding Principle 3, including the calculation of baseline value and project value, and net benefits are correctly calculated and in line with evidences verified/7//9//10//11/.
Findings	No findings raised in this section.
Conclusion	The verification team confirms that no leakage needs to be considered, which is consistent with methodology ACM0002 Version 13.0.0 .

3.7. Post-registration changes

Temporary deviations from the registered monitoring plan, monitoring methodology or standardized baseline

No temporary deviations from the registered monitoring plan, monitoring methodology or standardized baseline were identified during the verification.

Corrections

No corrections to project information or parameters fixed at validation, as described in the registered PDD have been made.

Changes to the start date of the crediting period

There is no change to the start date of the second crediting period.

Inclusion of a monitoring plan to a registered project activity

Not Applicable.

The registered PDD contains a monitoring plan.

Permanent changes from registered monitoring plan, monitoring methodology or standardized baseline

No permanent changes from the registered monitoring plan, monitoring methodology or standardized baseline were identified during the verification.

Changes to the project design of a registered project activity

There are no proposed or actual changes to the project design of the registered GS4GG project activity.

Types of changes specific to afforestation and reforestation project activities

Not Applicable.

3.8. Verification of stakeholders inputs

By online interview with the stakeholders and document review, the verification team confirms that the communication channel has been established by the project participant, by using the Grievance Expression Process Book/17/, the telephone access and internet/email access. Up to the date of remote interview, no grievance or negative comment was received through mentioned communication channels.

4. VERIFICATION STATEMENT

China Certification Center, Inc. (CCCI) has performed the 4th periodic verification of InfraVest Taiwan Wind Farms Bundled Project 2011, GS4GG Reference Number 1001, covering the monitoring period 01/01/2019 to 31/12/2019, and applying methodology ACM0002 : "Consolidated baseline methodology for grid-connected electricity generation from renewable sources", Version 13.0.0 . The verification was performed on the basis of Gold Standard for the Global Goals (GS4GG) criteria, UNFCCC criteria for the CDM, and host country criteria, as well as criteria given to provide for consistent project operations, monitoring and reporting.

The verification consisted of the following three phases: i) desk review of the project design, monitoring report and additional background documents; ii) remote interviews with project stakeholders; iii) resolution of outstanding issues and the issuance of the final verification report and opinion.

CCCI has verified the project Monitoring Report Version 02 dated 06/07/2020 /2/ for the monitoring period as indicated above. CCCI confirms that the Project is implemented as described in the registered Project Design Document. Installed equipment being essential for generating emission reductions run reliably and are calibrated appropriately. The monitoring system is in place and the Project is generating GHG emission reductions as a GS4GG project.

CCCI can confirm that the GHG emission reductions are calculated without material misstatements, or erroneous reporting of information. Our opinion relates to the Projects' GHG emission reductions impact and resulting GHG emission reductions reported and related to the validated and registered project baseline, monitoring plan and its associated documents. Based on the evidence and information that are considered necessary to guarantee that GHG emission reductions impacts are appropriately calculated, CCCI confirms the following statement:

SDG13 – GHG Emission reduction impacts during this monitoring period 01/01/2019 to 31/12/2019.	161,285 tCO_2e

Mr. Stefan Liang	Ms. Li Yiting
Team Leader	Internal Technical Reviewer
08/07/2020	08/07/2020

5. COMPETENCE OF TEAM MEMBERS AND TECHNICAL REVIEWERS

Stefan Liang	Team Leader	Mr. Stefan Liang is a lead Auditor based in Beijing. Mr Liang holds a BEn in Environmental Engineering and an MSc in Environmental Science & Engineering. He has about 11 years' experience in carbon project development and certification, including 10 years' experience in GHG projects' validation and verification. He has participated in CDM validation and verification for about 100 projects, which include sectors in wind power, hydropower, biomass, waste heat recovery, waste disposal and coal mine methane. Mr. Liang has completed the CCCI Validation & Verification training course, and has completed internal auditor training in ISO 9001 and ISO14001, and lead auditor training in CDM and ISO 14064. Mr. Liang has covered sectoral scopes of 1, 4, 8,10. Mr. Liang has conducted verification for several GS VER projects (GS 612, GS472, GS1001, GS1350, GS401, GS2766, GS445, etc.). Mr. Stefan Liang has abundant GHG project auditing experience in China and other regions of Asia.

Guo Jiayuan	Lead Verifier	Ms. Guo Jiayuan is an experienced technical expert in the field of climate change and GHG emission reduction. She has more than 10 years' experience in the development and implementation of CDM projects. She has participated in more than 30 CDM projects covering diversified scope, including wind power, hydro power, LNG power generation and biomass cogeneration. By developing project design document and monitoring report, desk review and onsite visit, she gained extensive experience in the whole process of CDM project developing. Ms. Guo Jiayuan has completed the CCCI Validation & Verification training course, and has completed internal auditor training in ISO 9001 and ISO14001, and lead auditor training in CDM and ISO 14064. Guo Jiayuan has covered sectoral scopes of 1.Ms. Guo Jiayuan has abundant GHG project auditing experience in China and other regions of Asia.

Li Yiting	Technical Reviewer	Ms. Li Yiting has worked in CDM projects since 2006 and gained extensive experience in the development and implementation of CDM projects, working in the area of project-based mechanisms. Her background includes both project validation and verification, in different sectoral scopes, including wind power, hydro power, biomass, waste heat recovery in cement industry, coke oven gas recovery industry. From year 2009 onwards she has been involved in validation and verification of CDM projects and also as a technical reviewer. Ms. Li Yiting has completed the CCCI Validation & Verification training course, and has completed internal auditor training in ISO 9001 and ISO14001, and lead auditor training in CDM and ISO 14064. Ms. Li Yiting has covered sectoral scopes of 1, 4. Ms. Li Yiting has conducted validation or verification for several GS VER projects (GS472, GS612, GS1001, GS1350, etc.). Ms Li Yiting has abundant GHG project auditing experience in China and other regions of Asia.

6. DOCUMENTS REVIEWED OR REFERENCED

No.	Author	Title	References to the document	Provider
/1/	South Pole Carbon Asset Management Ltd.	Registered GS-PDD, version 3 dated 20/06/2013, and its transition annex.	https://registry.goldstandard.org/projects/details/2	Others
/2/	South Pole Carbon Asset Management Ltd.	Monitoring Report version 01 dated 01/03/2020	-	Project participants
		Revised Monitoring Report Version 02 dated 06/07/2020	-	Project participants
/3/	South Pole Carbon Asset Management Ltd.	Emission reduction calculation sheet	-	Project participants
/4/	-	Validation report and Verification Reports for previous monitoring period	https://registry.goldstandard.org/projects/details/2	Others
/5/	CDM EB	ACM0002: “Consolidated baseline methodology for grid-connected electricity generation from renewable sources”, Version 13.0.0	http://cdm.unfccc.int/methodologies/PAmethodologies/approved	Others
/6/	InfraVest Wind Power Group	local stakeholder interview records in 2019	-	Project participants
/7/	InfraVest Wind Power Group	Employment contracts and Health and labor Insurance Records	-	Project participants
/8/	InfraVest Wind Power Group	Inspection records of replantation dated 27/05/2014.	-	Project participants
	Forestry Bureau	Maintenance statement, dated Oct and Dec 2019		
/9/	InfraVest Wind Power Group	Training materials and training records, dated 23/01/2019 and 19-20/10/2019	-	Project participants
/10/	InfraVest Wind Power Group	Monthly reports covering the monitoring period from 01/01/2019 to 31/12/2019	-	Project participants
/11/	TaiPower Grid Company	Electricity receipts (for electricity export) covering the monitoring period from 01/01/2019 to 31/12/2019	-	Project participants
		Electricity receipts (for electricity import) covering the monitoring period from 01/01/2019 to 31/12/2019		

/12/	InfraVest Wind Power Group	Electricity line diagram	-	Project participants
/13/	Co-signed by the InfraVest Wind Power Group and TaiPower Grid Company	Power Purchase Agreements dated 31/05/2011, 08/09/2011, 25/03/2015, 04/06/2015, 20/05/2015, 11/01/2016	-	Project participants
/14/	InfraVest Wind Power Group	Monitoring Manual	-	Project participants
/15/	TaiPower Grid Company	Meter change record	-	Project participants
/16/	Taiwan Electric Research and Testing Center	Calibration reports for the revenue meters	-	Project participants
/17/	Project participants	Grievance Expression Process Book	-	Project participants
/18/	Bureau of Standards, Metrology and Inspection (BSMI)	Accreditation Authorization for Taiwan Electric Research and Testing Center, issued on 01/06/1989	http://www.bsmi.gov.tw/wSite/laws/review.jsp?lawId=2c9081fe1cb78d60011cc1e27d120dd1	Project participants
/19/	Taiwan Government	Technical Specification for Verification and Inspection of Electricity Meters (Regulation No. CNMV 46)	-	Others
/20/	TaiPower Grid Company	Environmental Improvement Conditions Section, Operation Report	https://www.taipower.com.tw/tc/page.aspx?mid=216	Others
/21/	InfraVest Wind Power Group	Internal Employment regulation.	-	Project participants
/22/	Ministry of labor	Labour Standards Act, dated 11 December 2013	http://laws.cla.gov.tw/Eng/FLAW/FLAWDAT01.asp?lsid=FL0149	Others
		Minimum salary in Taiwan	http://www.mol.gov.tw/cht/index.php?code=list&ids=157	
		Labor insurance introduction	http://www.bli.gov.tw/en/sub.aspx?a=qlpmP7AGer8%3d	
/23/	GS Foundation	Principles & Requirements Version 1.2; Safeguarding Principles & Requirements Version 1.2; Stakeholder Consultation and Engagement Requirements Version 1.2;	https://globalgoals.goldstandard.org/	Others

		Renewable Energy Activity Requirements Version 1.2; Rule on COVID 19: Interim Measures; Validation Verification Body Requirements Version 1.0		

7. CLARIFICATION REQUESTS, CORRECTIVE ACTION REQUESTS AND FORWARD ACTION REQUESTS

Table 1. CAR from this verification

CAR ID	1	**Section no.**	3.5	**Date:** 03/07/2020
Description of CAR				
The calibration validity of the meter 19702302 was wrongly indicted in the MR version 01.				
Project participant response				**Date:** 06/07/2020
The calibration validity of the meter 19702302 has been corrected in the revised MR.				
Documentation provided by project participant				
Revised MR Version 02 dated 06/07/2020				
DOE assessment				**Date:** 06/07/2020
CCCI has checked the revised MR, and confirms the calibration info has been correctly indicated in the revised MR. The CAR is therefore closed.				

No CL from this verification

FAR-1 *Wind turbine ID numbers and meters to be installed will be clearly described in sections A.1 and B.7.3 and Figure B-1.*

The construction of the last one wind turbine generator in the Fongwei wind farm has not been started at the time of this verification, and the WTG ID and meters added (if any) will be listed in the MR then. Thus, the FAR will be closed as the Project fully operated.