Monitoring report form

(Version 04.0)

Complete this form in accordance with the Attachment "Instructions for filling out the monitoring report form" at the end of this form.

MONITORING REPORT	
Title of the project activity	InfraVest Taiwan Wind Farms Bundled Project 2011
Reference number of the project activity	GS1001
Version number of the monitoring report	3.0
Completion date of the monitoring report	04/07/2017
Registration date of the project activity	05/09/2013
Monitoring period number and duration of this monitoring period	3rd monitoring period From 01/04/2016 to 31/12/2016
Project participant(s)	South Pole Carbon Asset Management Ltd. (private entity) InfraVest Wind Power Group (private entity)
Host Party(ies)	Taiwan
Sectoral scope and selected methodology(ies), and where applicable, applied standardized baseline(s)	Sectoral Scope 1: Energy industries (Renewable source) ACM0002 (Version 13.0.0)
Estimated amount of GHG emission reductions or net anthropogenic GHG removals by sinks for this monitoring period in the registered PDD	143,835tCO_2e
Actual GHG emission reductions or net anthropogenic GHG removals by sinks achieved in this monitoring period	Vintage of 01/04/2016 to 31/12/2016: 91,066tCO_2e
Actual GHG emission reductions or net anthropogenic GHG removals by sinks achieved during the period up to 31 December 2012(if applicable)	Not applicable
Actual GHG emission reductions or net anthropogenic GHG removals by sinks achieved during the period from 1 January 2013 onwards (if applicable).	91,066 tCO_2e

SECTION A. Description of project activity

A.1. Purpose and general description of project activity

>>

The InfraVest Taiwan Wind Farms Bundled Project 2011(hereinafter referred to as "the project") is a bundled project of four wind farms projects:

- InfraVest Fongwei Wind Farm Project, Taiwan: a 13.8 MW (6x2.3 MW) onshore wind farm located in Hsinfong Township (therefore also called Hsinfong Wind Farm), Hsinchu County, which comprises 6 wind turbines (hereafter: **Fongwei Wind Farm**).
- InfraVest Longwei Wind Farm Project, Taiwan: a 44.1 MW (18x2.3 MW + 3x0.9 MW) onshore wind farm located in Houlong Township (therefore also called Houlong Wind Farm), Miaoli County, which comprises 21 wind turbines (hereafter: **Longwei Wind Farm**).
- InfraVest Chungwei Wind Farm Project, Taiwan: a 29.9 MW (13x2.3 MW) onshore wind farm located in Dajia and Da-An Townships, Taichung County, which covers Taichung phases I and III, and Dafong sites, and which comprises 13 wind turbines (hereafter: **Chungwei Wind Farm**). There are another 20 wind turbines also located in Dajia and Da-An Townships, Taichung County, which belong to the same project owner. But these 20 turbines belong to the project owner's another GS VER project (GS472), which was already registered in 2010. Therefore, the 13 wind turbines in Chungwei Wind Farm under the project are the capacity addition to the existing grid-connected renewable power plant (project GS472).
- InfraVest Tauwei Wind Farm Project, Taiwan: a 4.6 MW (2x2.3 MW) onshore wind farm located in Guanyin Township (also called Hsinwu Wind Farm), Taoyuan County, which comprises 2 wind turbines (hereafter: **Tauwei Wind Farm**). There are another 19 wind turbines also located in Guanyin Township, Taoyuan County, which belong to the same project owner. But these 19 turbines belong to the project owner's another GS VER project (GS612), which was already registered in 2011. Therefore, the 2 wind turbines in Tauwei Wind Farm under the project are the capacity addition to the existing grid-connected renewable power plant (project GS612).

The above-mentioned four wind farms are constructed and operated by InfraVest Wind Power Group (hereafter refer as "InfraVest"), which is a subsidiary of Germany based VWind AG. The project in total comprises 42 wind turbines and the total installed capacity of the bundled project is 92.4 MW. At full capacity, the aggregated output of the project is expected to be of 250,866 MWh/year, which is to be delivered to the state-owned power grid, Taipower grid ("TPG"), displacing part of the electricity supplied by the power grid currently dominated by fossil fuel-fired power plants. Accordingly, the project will lead to carbon dioxide emission reduction. The annual emission reductions are estimated as 190,908 tCO_2e/year, and the total emission reductions for the first crediting period of 7 years are estimated as 1,336,356 tCO_2e.

Prior to implementation of the project, electricity demand in local society is supplied by the TPG dominated by the thermal power. The baseline scenario to the project activity is the same as the scenario existing prior to the start of implementation of the project activity. The purpose of the project activity is to produce electricity with clean and renewable wind sources and to displace part of the electricity from fossil fuel-fired power plants connected to the TPG. Thus, greenhouse gas (GHG) emission reductions can be achieved.

Contribution to sustainable development:

The project contributes significantly to the region's sustainable development. The specific goals for the project are to:

- reduce the greenhouse gas emissions in Taiwan by replacing fossil fuel based power generation;

- produce clean and renewable energy that contributes to alleviate the global warming;
- contribute the development of the wind energy sector in Taiwan;
- provide clean electricity to households;
- create local employment both during the construction and operational phases;
- technology and know-how transfer as the employees are trained by German wind turbine manufacturer Enercon on maintenance, safety and operational issues;
- contribute to the reduction of pollutants such as sulphur dioxide, nitrogen oxides and particles resulting from the electricity generation from fossil fuels in Taiwan;
- contribute to Taiwan's energy sustainability and security by reducing the dependency on fossil fuel imports.

A.2. Location of project activity

>>

The locations of the wind farms are all in West Taiwan. Fongwei Wind Farm is located at the coastal land of Hsinfong Township, Hsinchu County. Hsinchu County is located in northwestern Taiwan, and is connected with Taoyuan County in north, Miaoli County in south, Taiwan Strait in the west and the Snow Mountains (Dabajian Mountain) in the east. Hsinchu County is surrounded by mountains on three sides.

Longwei Wind Farm is located in the west coastal land of Houlong Township, Miaoli County. Miaoli County is located in mountainous and hilly areas of central and northern Taiwan.

Chungwei Wind Farm is located in the coastal land of Dajia and Da-An Townships, Taichung County. Dajia and Da-An Townships are in the northwest of Taichung County and connected with Taiwan Strait in the west.

Tauwei Wind Farm is located in the west coastal land of Guanyin Townships, Taoyuan County. Taoyuan County is located in north-western Taiwan, close to the Taipei metropolitan area; with the majority of terrains are the hill terraces.

The project activities are distributed in these zones, which are at the geographical positions of:

Wind Farm Name	Coordinates for center of farm
Tauwei Wind Farm	25º02'43"N, 121º04'21"E
Fongwei Wind Farm	24º55'48"N, 120º58'40"E
Longwei Wind Farm	24º36'41"N, 120º44'13"E
Chungwei Wind Farm	24º24'21"N, 120º35'59"E

Figure A-1 shows the geographical locations of the project.

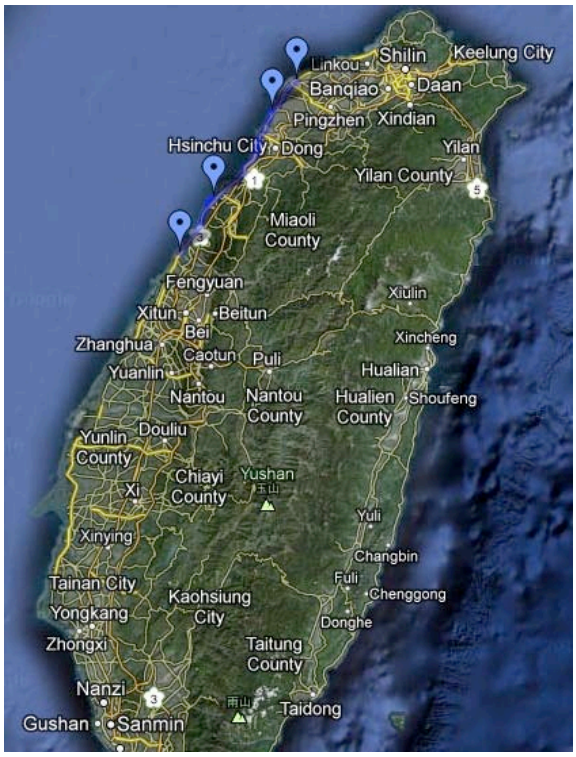
Linkou
Shilin
Keelung City
Banqiao
Daan
Pingzhen
Xindian
Hsinchu City
Dong
Yilan
Yilan County
Miaoli County
Fengyuan
Xiulin
Xitun
Beitun
Bei
Zhanghua
Caotun
Puli
Xincheng
Yuanlin
Hualian
Nantou
Nantou County
Hualien County
Shoufeng
Douliu
Yunlin County
Xi
Chiayi County
Yushan
Yuli
Xinying
Changbin
Tainan City
Fuli
Kaohsiung City
Chenggong
Yongkang
Donghe
Zhongxi
Taitung County
Nanzi
Taidong
Gushan
Sanmin

Tauwei Wind Farm 25°02'43"N
121°04'21"E
Guanyin
Dayuan
Luzhu
Guishan
Banqiao
Taoyuan
Fongwei Wind Farm 24°55'48"N
120°58'40"E
Xinwu
Zhongli
Bade
Tucheng
Sanxia
Taoyuan County
Yangmei
Hukou
Daxi
Xinpu
Longtan
Zhubei
Bei
Fuxing
Dong
Guanxi
Qionglin
Baoshan
Zhudong
Hsinchu County
Zhunan
Longwei Wind Farm
24°36'41"N
120°44'13"E
Toufen
Emei
Beipu
Zaoqiao
Houlong
Sanwan
Nanzhuang
Wufeng
Jianshi
Miaoli
Xinhu
Shitan
Chungwei Wind Farm
24°24'21"N
120°35'59"E
Gongguan
Miaoli County
Dabajian Mountain
Tongxiao
Yuanli
Sanyi
Dahu
Xueshan
Nanhu Mountain
Daan
Dajia
Talan

A.3. Parties and project participant(s)

Party involved ((host) indicates a host Party)	Private and/or public entity(ies) project participants (as applicable)	Indicate if the Party involved wishes to be considered as project participant (Yes/No)
Taiwan (host)	InfraVest Wind Power Group (Private entity)	No
Switzerland	South Pole Carbon Asset Management Ltd. (Private entity)	No

A.4. Reference of applied methodology and standardized baseline

>>
The approved consolidated baseline and monitoring methodology ACM0002 (version 13.0.0) "Consolidated baseline methodology for grid-connected electricity generation from renewable sources – Version 13.0.0" has been used.

The methodology was applied with the following tools:

- Tool for the demonstration and assessment of additionality (Version 07.0.0)
- Tool to calculate the emission factor for an electricity system (Version 03.0.0)

Details are available at the following website:
http://cdm.unfccc.int/methodologies/PAmethodologies/approved

A.5. Crediting period of project activity

>>
Type of the crediting period of this monitoring period: Renewable.
This is the first crediting period: 7 years and 0 months.
The first crediting period:01/01/2014 to 31/01/2021
The second monitoring period: 01/04/2015 to 31/03/2016
The third monitoring period: 01/04/2016 to 31/12/2016

A.6. Contact information of responsible persons/ entities

>>

Entity responsible for completing the MR	South Pole Carbon Asset Management Ltd.
Address	Technoparkstrasse 1, Zurich, 8005, Switzerland
URL	http://thesouthpolegroup.com
Telephone	+41 43 501 35 50
Responsible entity is also a project participant in Appendix 1?	Yes
Contact person	Fang Qun
Contact email	q.fang@thesouthpolegroup.com

SECTION B. Implementation of project activity

B.1. Description of implemented registered project activity

>>
The project in total comprises 39 Enercon E-70 wind turbines with the unit capacity of 2.3 MW and 3 Enercon E-44 wind turbines with the unit capacity of 0.9 MW. The turbines installed are imported

from German wind turbine supplier, Enercon. Wind turbines type Enercon E-70 is used, with 71 m diameters and 64 m hub heights; and wind turbines type Enercon E-44 is used, with 44 m diameters and 55 m hub heights.
The technical data of the turbine units of turbine type E-70 and E-44 are given in the tables below.

Table 1. Characteristics of the wind turbine E-70

Wind Turbine Type:	E-70			
Site:	Fongwei	Longwei	Chungwei	Tauwei
Rated Power:	2300 kW			
Number of turbines	6	18	13	2
Output voltage	400 V			
Rotor diameter:	71 m			
Hub Height:	64 m			
Generator:	Enercon direct-drive synchronous annular generator			
Grid feeding:	ENERCON converter			
Technical lifetime	20 years			

Table 2. Characteristics of the wind turbine E-44

Wind Turbine Type:	E-44
Site:	Longwei
Rated Power:	900 kW
Number of turbines	3
Output voltage	400 V
Rotor diameter:	44 m
Hub Height:	55 m
Generator:	Enercon direct-drive synchronous annular generator
Grid feeding:	ENERCON converter
Technical lifetime	20 years

The turbines in Fongwei wind farm site are connected to Taipower grid at SongLin S/S Substation through 11.4 kV transmission lines. In Longwei wind farm site, 18 turbines are connected to Taipower 69 kV grid through the Gongguan-Miaozi 69 kV line #1 connection station, and 3 turbines are connected to Taipower 11.4 kV grid at Houlong S/S Substation by 2 lines separately.The turbines in Chungwei wind farm site are connected to Taipower 69 kV grid through 22.8kV/69kV transformer. The turbines in Tauwei wind farm site are connected to Taipower 161 kV grid through Guanyin wind farm. Each wind farm utilizes bi-directional watthour meters measuring electricity supplied to Taipower grid.

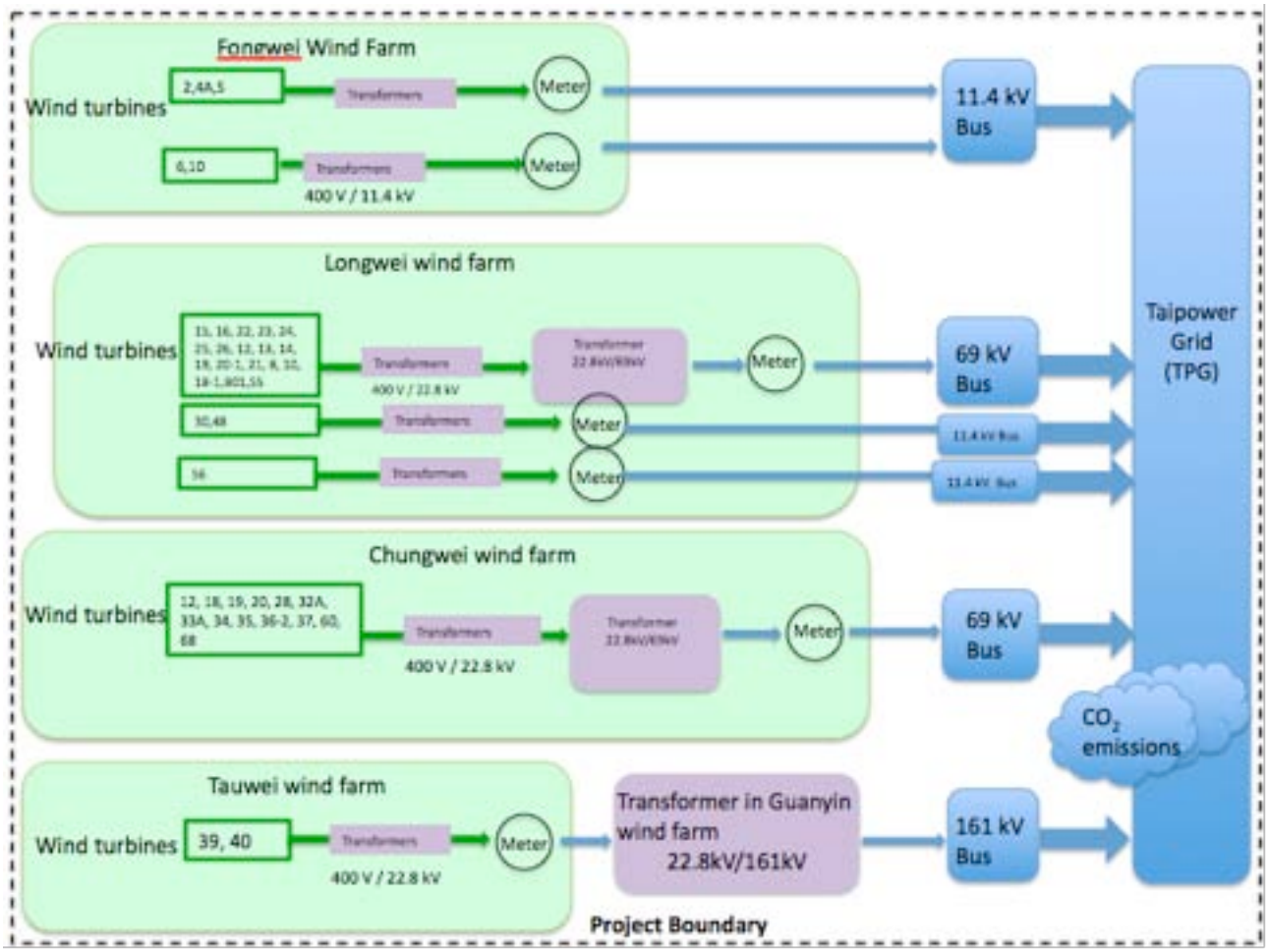

During monitoring period (01/04/2016 to 31/12/2016), the wind turbines already installed and stared operating are listed in the table:

Wind Farm Name	Unit Capacity (MW)	Numbers of units	Overall installed Capacity (MW)	Estimated Electricity generation (MWh)	Wind turbine ID No. (already installed and start operating)*	First turbine Operation start date
Fongwei	2.3	6	13.8	35,314	2, 4A, 5, 6, 10	26/09/2011
Longwei	2.3	18	41.4	105,943	8, 10, 13, 14, 15, 16, 19, 20-1, 21, 22, 23, 24, 25, 26, B01, 56, 30, 48	27/04/2012
	0.9	3	2.7	6,909	12, 18-1,55	
Chungwei	2.3	3	6.9	20,493	12, 18, 19, 20, 28, 32A, 33A, 34, 35, 36-2, 37, 60, 68	31/10/2011
	2.3	9	20.7	61,479		
	2.3	1	2.3	6,831		
Tauwei	2.3	2	4.6	13,897	39, 40	04/07/2011
Total	-	42	92.4	250,866	-	-

For Fongwei wind farm,there still one wind turbine not being installed and the construction is planned to be completed in the future;
And the full operation date of Chungwei wind farm is 26/09/2012. The full operation date of Tauwei wind farm is 04/07/2011. The full operation date of Longwei wind farm is 12/2015.
No events or situation that occurred during the monitoring period, which may impact the GHG emission reductions or removals and monitoring.

B.2. Post registration changes

B.2.1. Temporary deviations from registered monitoring plan, applied methodology or applied standardized baseline

>>
No temporary deviations from registered monitoring plan or applied methodology.

B.2.2. Corrections

>>
No corrections.

B.2.3. Permanent changes from registered monitoring plan, applied methodology or applied standardized baseline

>>
Not applicable.

B.2.4. Changes to project design of registered project activity

>>
No changes to project design of registered project activity.

B.2.5. Changes to start date of crediting period

>>
N/A

B.2.6. Types of changes specific to afforestation or reforestation project activity

>>
Not applicable.

SECTION C. Description of monitoring system

>>

1. Monitoring Objectives:

As per ACM0002, the emission reductions achieved by the project activity will be determined ex-post through direct measurement of the amount net electricity supplied to the grid multiplied by the combined margin emission factor:

$ER_y = EG_{facility,y} * EF_{grid,CM,y}$ (for Fongwei and Longwei Wind Farms)
$ER_y = EG_{PJ_Add,y} * EF_{grid,CM,y}$ (for Chungwei and Tauwei Wind Farms)

Where:
ER_y = Emission emissions in year y (tCO_2/yr)
$EG_{facility,y}$ = Quantity of net electricity generation supplied by the project plant/unit to the grid in year y (MWh/yr)
$EG_{PJ_Add,y}$ = Quantity of net electricity generation supplied to the grid in year y by the project plant/unit that has been added under the project activity (MWh/yr)

$EF_{grid,CM,y}$ = Combined margin CO_2 emission factor for grid connected power generation in year y calculated using the latest version of the "Tool to calculate the emission factor for an electricity system" (tCO_2/MWh)

As the emission factor is fixed for the first crediting period, the aim of the monitoring is therefore only to monitor the quantity of net electricity generation supplied by the project plant to the grid using energy meters. The project proponent may use electricity from the grid for start up purpose so both electricity consumption and generation will be monitored:

$EG_{facility,y} = EG_{Export,y} - EG_{Import,y}$ (for Fongwei and Longwei Wind Farms)
$EG_{PJ_Add,y} = EG_{Export,y} - EG_{Import,y}$ (for Chungwei and Tauwei Wind Farms)

$EG_{facility,y}$ Quantity of net electricity generation supplied by the project plant/unit to the grid in year y (MWh/yr)
$EG_{PJ_Add,y}$ Quantity of net electricity generation supplied to the grid in year y by the project plant/unit that has been added under the project activity (MWh/yr)
$EG_{Export,y}$ Quantity of electricity generation supplied by the project plant/unit to the grid in year y (MWh/y)
$EG_{Import,y}$ Quantity of electricity consumption of the project plant/unit from the grid in year y (MWh/y)

2. Electricity meters:

Electricity generation ($EG_{Export,y}$) and consumption ($EG_{Import,y}$) are measured continuously by bi-directional meters installed at the wind farms switchrooms, which are owned and supervised by Taipower. The accuracy for meters is equal to or higher than 0.5%. The meters locations and numbers of meters used for each wind farm are listed as below[1]:

Fongwei Wind Farm:
Two bi-directional electricity meters are located in Fongwei wind farm 11.4 kV Switchroom, before connection to Taipower 11.4 kV grid at SongLin S/S Substation respectively.

Longwei Wind Farm:
One bi-directional electricity meter is located in Longwei wind farm 69 kV Switchroom, primary side of the 22.8kV/69kV Transformer, and before connection to the Gongguan-Miaozi 69 kV line #1 connection station; and the other two meters are installed in Longwei wind farm 11.4 kV Switchroom, before connection to Taipower 11.4 kV grid at HouLong S/S Substation respectively

Chungwei Wind Farm:
One bi-directional electricity meter is located in Chungwei wind farm 22.8 kV Switchroom, after the 22.8kV/69kV Transformer and before connection to Taipower 69 kV grid.

Tauwei Wind Farm:
One bi-directional electricity meter is located in Tauwei wind farm switchroom, before the electricity generated by Tauwei is connected with Guanyin wind farm, then to Taipower 161 kV grid.

Please find the meter calibration and accuracy information in the following table:

Wind Farm	Meter Serial No.	Meter model	Specific location	Accuracy Class	Calibration date (dd/mm/yy)	Valid until (dd/mm/yy)
Fongwei	10940003	kV2c	Fongwei wind farm	0.5	27/08/2010	26/08/2018

[1] The wind turbines serial numbers for turbines already installed and stared operating are included in the diagram. For Fongwei wind farm, there is still one turbine are planned to be installed. Since the project construction has been fully complete, the line diagram will be subject to future changes. For Longwei wind farm, it is in full operation in 12/2015. The line diagram has been updated accordingly.

Fongwei	10940035	kV2c	Fongwei wind farm	0.5	27/08/2010	26/08/2018
Longwei	15001372	kV2c	Longwei wind farm	0.5	09/11/2015	08/11/2023
Longwei	15001382	kV2c	Longwei wind farm	0.5	09/11/2015	08/11/2023
Longwei	10940022	kV2c	Longwei wind farm	0.5	27/08/2010	26/08/2018
Chungwei	12941317	kV2c	Chungwei wind farm	0.5	18/12/2012	17/12/2020
Tauwei	11943540	kV2c	Tauwei wind farm	0.5	14/12/2011	13/12/2019

The turbines in Fongwei wind farm site are connected to Taipower grid at SongLin S/S Substation through 11.4 kV transmission line. In Longwei wind farm site, 18 turbines are connected to Taipower 69 kV grid through the Gongguan-Miaozi 69 kV line #1 connection station, and 3 turbines are connected to Taipower 11.4 kV grid at Houlong S/S Substation by 2 lines separately. The turbines in Chungwei wind farm site are connected to Taipower 69 kV grid through 22.8kV/69kV transformer. The turbines in Tauwei wind farm site are connected to Taipower 161 kV grid through Guanyin wind farm. Electricity Connection Diagram with meters locations for each wind farm is attached as below:

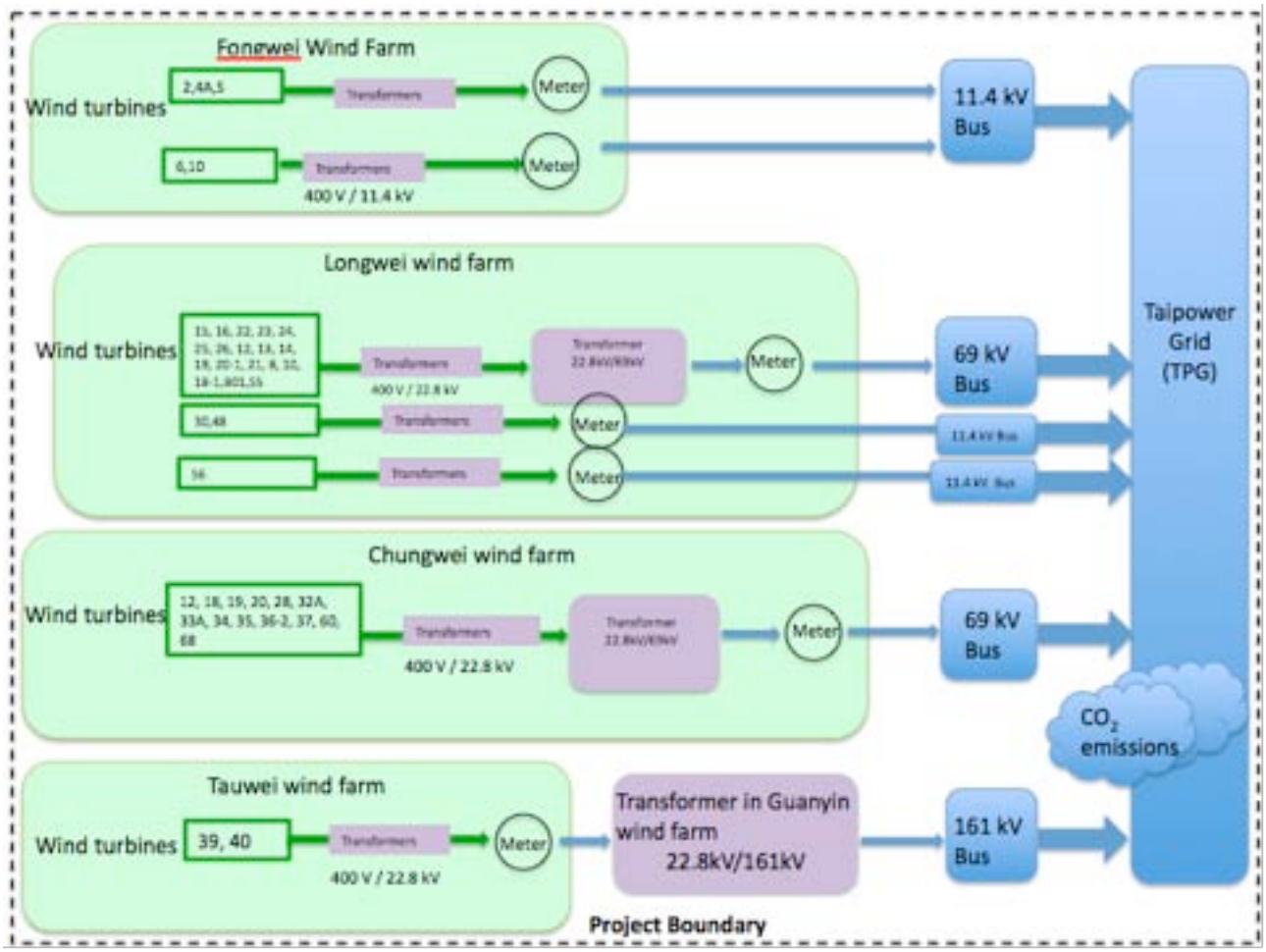

3. Responsibility of Parties

Two parties are involved: InfraVest (project owner), Taipower (grid company).

InfraVest is in charge of overall wind projects operation & maintenance.

Taipower is in charge of monitoring.

4. Data Monitoring & Management Procedures:

The monitoring is done according to the following procedures:

1. Data from electricity meters are recorded remotely and digitally at the Taipower office. The cut-off time is the last day of every month.Taipower's personnel download the electric data.
2. Taipower incorporates the downloaded electric data into the monthly electricity receipts and sends to InfraVest for confirmation on the amount of both electricity export and import;
3. InfraVest confirms the electricity amount on the receipts.
4. Taipower pays the money to InfraVest for the confirmed export amount and receives export invoices from InfraVest. InfraVest pays to Taipower for the confirmed import amount and receives import invoices from Taipower.

GS VER monitoring training for the staffs will be provided.

5. Quality assurance and quality control procedures

The meter specification complies with The Weight and Measures Act, Regulation no. CNMV 46, 'Technical Specification for Verification and Inspection of Electricity Meters'[2]. The accuracy class of the electricity meters used for the project activity would be at least 0.5%, in line with the official standard error for electricity meter (MOF) at ±0.5%[3].

The official period of validity for the *electronic electricity meter* in this project is determined as 8 years. Request for calibration, error check and adjustment can be made by the project owner at its own expense. Taipower's calibration procedures are in accordance to and governed by the Bureau of Standards, Metrology and Inspection, Ministry of Economic Affairs, Taiwan R.O.C. All the calibration records will be documented by the project owner and provided to the DOE during verification.

All emergency and disputes management procedures related to the electricity meter are regulated by Bureau of Standards, Metrology and Inspection, M.O.E.A., R.O.C[4]. In case of meter performance failure or malfunction, Taipower and the project owner would follow the Power Purchase Agreement (PPA) clause 6: Taipower and the project owner will jointly recalculate the amount of electricity dispatched by the project during the malfunction period based on the electricity dispatched during the same period last year or on the average electricity dispatched normally during the previous three periods for electricity purchasing and sales.[5]

[2]The Weight and Measures Act www.bsmi.gov.tw/wSite/public/Attachment/f1224657229438.doc
Technical Specification for Verification and Inspection of Electricity Meters

http://www.bsmi.gov.tw/wSite/public/Attachment/f1224657229438.doc Clause 3.9.3

[3] The Weight and Measures Act www.bsmi.gov.tw/wSite/public/Attachment/f1224657229438.doc

Technical Specification for Verification and Inspection of Electricity Meters

http://www.bsmi.gov.tw/wSite/public/Attachment/f1224657229438.doc Clause 3.3.4 Table 4

[4] http://www.bsmi.gov.tw/wSite/laws/review.jsp?lawId=8a8a85591c30ce08011c31d0b3860006&mp=1

[5] Please refer to the Power Purchase Agreement (PPA) of the project activity.

SECTION D. Data and parameters

D.1. Data and parameters fixed ex ante or at renewal of crediting period

Data / Parameter:	$EF_{grid,CM,y}$
Unit:	tCO2e/MWh
Description:	Combined Emission factor
Source of data:	Calculated
Value(s) applied):	0.761 for the first crediting period
Purpose of data:	Calculation of baseline emissions
Additional comment:	-

D.2. Data and parameters monitored

Data / Parameter:	$EG_{Export,y}$
Unit:	MWh/yr
Description:	Quantity of electricity generation supplied by the project plant/unit to the grid in year y
Measured/ Calculated / Default:	Measured
Source of data:	Electricity meters
Value(s) of monitored parameter:	01/04/2016 – 31/12/2016: 120,118.148 MWh
Monitoring equipment:	Bi-directional meters for measuring electricity supplied to the grid by the project activity. Please refer to calibration and accuracy information of meters in section C.
Measuring/ Reading/ Recording frequency:	Continuous measurement and at least monthly recording.
Calculation method (if applicable):	N/A
QA/QC procedures:	Meter reading records will be crosschecked with the electricity receipts. The electricity meters will undergo maintenance/calibration according to Taiwan national standards (based on The Weight and Measures Act, Regulation no. CNMV 46, 'Technical Specification for Verification and Inspection of Electricity Meters') Accordingly, meter calibration is conducted every 8 years period.
Purpose of data:	Calculation of baseline emissions
Additional comment:	-

Data / Parameter:	**$EG_{Import,y}$**
Unit:	MWh/yr
Description:	Quantity of electricity consumption of the project plant/unit from the grid in year y

Measured/ Calculated / Default:	Measured
Source of data:	Electricity meter
Value(s) of monitored parameter:	01/04/2016 – 31/12/2016: 451,628MWh
Monitoring equipment:	Bi-directional meters are used for measuring electricity imported from the grid by the project activity. Please refer to calibration and accuracy information of meters in section C.
Measuring/ Reading/ Recording frequency:	Continuous measurement and at least monthly recording.
Calculation method (if applicable):	N/A
QA/QC procedures:	Meter reading records will be crosschecked with the electricity receipts. The electricity meters will undergo maintenance/calibration according to Taiwan national standards (based on The Weight and Measures Act, Regulation no. CNMV 46, 'Technical Specification for Verification and Inspection of Electricity Meters') Accordingly, meter calibration is conducted every 8 years period.
Purpose of data:	Calculation of baseline emissions
Additional comment:	-

Data / Parameter:	$\mathbf{EG_{facility,y}}$ $\mathbf{EG_{PJ_Add,y}}$
Unit:	MWh/yr
Description:	Quantity of net electricity generation supplied by the project plant/unit to the grid in year y Quantity of net electricity generation supplied to the grid in year y by the project plant/unit that has been added under the project activity
Measured/ Calculated / Default:	Calculated
Source of data:	Electricity meter
Value(s) of monitored parameter:	01/04/2016 – 31/12/2016: 119,666.52 MWh
Monitoring equipment:	Bi-directional meters are used for measuring net electricity supplied to the grid by the project activity. Please refer to calibration and accuracy information of meters in section C.
Measuring/ Reading/ Recording frequency:	Continuous measurement and at least monthly recording.
Calculation method (if applicable):	Calculated by the difference of $EG_{Export,y}$ – $EG_{Import,y}$ which are measured continuously and at least monthly recording.
QA/QC procedures:	Meter reading records of $EG_{Export,y}$ and $EG_{Import,y}$ will be crosschecked with the electricity receipts, and calculation will be double checked and verified.
Purpose of data:	Calculation of baseline emissions
Additional comment:	-

D.3. Implementation of sampling plan

>>
N/A

D.4. Other data and parameters monitored

>>

No		1
Indicator		Air Quality
Mitigation measure		N/A
Repeat for each parameter		
Chosen parameter		NOx, SOx & TSP emission reductions
Current situation of parameter		According to Taipower's latest announcement[6], an average of 0.229 ton/GWh SOx, 0.23 ton/GWh NOx and 0.019 ton/GWh TSP emissions are generated by electricity produced in 2016. Due to the lack of information about the averagely emission generated per GWh of SOx, NOx and TSP in 2016, the information of 2016 has been applied during this monitoring period. Based on such estimation, the project is expected to abate approximately 27.4 tonnes SOx, 27.52 tonnes NOx and 2.27 tonnes TSP during this monitoring period
Estimation of baseline situation of parameter		SOx, NOx and TSP emissions deriving from the electricity generated in the grid-connected fossil fuel fired power plants
Future target for parameter		Continuous monitoring of how much SOx, NOx and TSP are abated by the project.
Way of monitoring	How	Calculated, based on the announced SOx, NOx and TSP emissions/kWh announced by the grid company.
	When	Data will be compiled and monitored annually. All related records will be provided and verified by the DOE.
	By who	The project owner. The calculation of SOx, NOx and TSP abatement will be presented in the monitoring report during the first monitoring period.

No		2
Indicator		Quantitative employment and income generation
Mitigation measure		N/A
Repeat for each parameter		
Chosen parameter		Number of jobs, salary level
Current situation of parameter		All employees are fairly compensated (salaries qualify above the required minimum wage).
Estimation of baseline situation of parameter		Employment opportunity did not exist before the project was developed.
Future target for parameter		The project provides employment to permanent staffs for wind farms operation and all staff will be fairly compensated (above the required minimum wage). The project owner provides health insurance and labor insurance for the employee. Working hours and staff's salary is in compliance with applicable regulations.
Way of monitoring	How	Copy of employment contract and the labour insurance list from Labour Insurance Bureau will be used to specify number

[6] http://www.taipower.com.tw/content/govern/govern01.aspx?MType=5&MSType=14

		of permanent employees of the project owner and to indicate the salary levels.
	When	Data will be compiled and monitored annually. All related records will be provided and verified by the DOE.
	By who	The project owner will keep all employment records.

No		3
Indicator		Other pollutants
Mitigation measure		For residents who live very close to the wind turbine (<200 m) and feel affected by the wind noise, the project owner offers to install airtight windows.
Repeat for each parameter		Installation of airtight windows
Chosen parameter		Records of airtight windows installation for residents in need
Current situation of parameter		No such requirement has been received from residents by the project owner until now.
Estimation of baseline situation of parameter		No such requirement was needed.
Future target for parameter		The project owner will offer to install airtight windows for residents in need to reduce complaints about noise from residents.
Way of monitoring	How	Keep records and interview with residents who have the airtight windows installed if any.
	When	Records will be compiled and checked annually. All related records will be provided and verified by the DOE.
	By who	The project owner will keep all records.

No		4
Indicator		Biodiversity
Mitigation measure		The locations of wind towers are carefully selected and the surroundings of wind towers are greened.
Repeat for each parameter		Plants re-plantation
Chosen parameter		Re-plantation records
Current situation of parameter		The project owner has already completed replantation for Chungwei and Tauwei Wind Farms, with replantation records and photos ready. As Fongwei and Longwei Wind Farms are still under construction, the replantation records and photos will be available later on.
Estimation of baseline situation of parameter		No such record exists.
Future target for parameter		Wind turbine itself occupies very little land after completion of construction, with the foundation part of only 6.5 *6.5 m (42.25 m^2) exposed surface area; and the remaining area of one whole wind farm is also covered by earth. All these areas will be replanted to native grass species of plants, in order to attract some terrestrial animals to inhabit, and the reduced habitat areas due to turbines setting will be reduced to a minimum range.
Way of monitoring	How	Keep replantation records and photos
	When	Records and photos will be compiled and checked annually. All related records will be provided and verified by the DOE.
	By who	The project owner will keep all records and photos.

No		5
Indicator		Landscape and visual impact
Mitigation measure		The overall color of wind towers is mainly white or lightcolor and the surroundings of wind towers are greened.
Repeat for each parameter		Interview with nearby residents
Chosen parameter		Onsite interview and interview records
Current situation of parameter		The soil around wind turbines has been replanted for green landscaping; and the color of wind turbines is light color. The existence of those wind turbines has increased the attractiveness of local area, and the wind project site now has become a popular tourist place. Positive feedbacks have been received from the onsite interview.
Estimation of baseline situation of parameter		No such interview or interview records exist.
Future target for parameter		No negative feedbacks regarding the landscape and visual impact would be received from the interviews with the nearby residents.
Way of monitoring	How	Conduct onsite interviews. Keep interview records and photos.
	When	Interviews will be conducted annually during onsite visit. Interview records and photos will be compiled and checked annually. All related records will be provided and verified by the DOE.
	By who	The project owner will conduct the interviews and keep all records and photos.

No		6
Indicator		Electromagnetic interference and radiation
Mitigation measure		The locations of wind towers are carefully selected; using directional antenna to eliminate interference on point-to-point communication; moving radio facilities; and installing devices to improve quality of TV reception.
Repeat for each parameter		Installation of relevant antenna or devices for user in need
Chosen parameter		Installation records
Current situation of parameter		No such requirement has been received from residents by the project owner until now.
Estimation of baseline situation of parameter		No such requirement was needed.
Future target for parameter		The project owner will offer to install devices for residents in need to reduce complaints about electromagnetic interference and radiation from residents.
Way of monitoring	How	Keep installation records and photos.
	When	Records and photos will be compiled and checked annually. All related records will be provided and verified by the DOE.
	By who	The project owner will keep all records and photos.

SECTION E. Calculation of emission reductions or GHG removals by sinks

E.1. Calculation of baseline emissions or baseline net GHG removals by sinks

>>

As per ACM0002, baseline emissions include only CO_2 emissions from electricity generation in fossil fuel fired power plants that are displaced due to the project activity, calculated as follows:

$BE_y = EG_{PJ,y} * EF_{grid,CM,y}$

Where:
BE_y = Baseline emissions in year y (tCO_2/yr)
$EG_{PJ,y}$ = Quantity of net electricity generation that is produced and fed into the grid as a result of the implementation of the CDM project activity in year y (MWh/yr)
$EF_{grid,CM,y}$ = Combined margin CO_2 emission factor for grid connected power generation in year y calculated using the latest version of the "Tool to calculate the emission factor for an electricity system" (tCO_2/MWh)

As per ACM0002, Fongwei and Longwei Wind Farms under the project activity are the installations of new grid-connected renewable power plants at sites where no renewable power plant was operated prior to the implementation of the project activity, so:

$EG_{PJ,y} = EG_{facility,y}$

Where:
$EG_{facility,y}$ = Quantity of net electricity generation supplied by the project plant/unit to the grid in year y (MWh/yr)

According to ACM0002, Chungwei and Tauwei Wind Farms under the project activity are the capacity additions to existing renewable energy power plants, it is assumed that the addition of new capacity does not significantly affect the electricity generated by existing plants. In this case, the electricity fed into the grid by the added power plants could be directly metered and used to determine $EG_{PJ,y}$.
Project participants may use one of the following two options to determine $EG_{PJ,y}$:

- Option 1: Use the approach applied to retrofits and replacements above. $EG_{facility,y}$ corresponds to the total electricity generation of the existing plant(s) or unit(s) and the added plant(s) or unit(s). A separate metering of electricity fed into the grid by the added plant(s) or unit(s) is not necessary under this option. This option may be applied to all renewable power projects.
- Option 2: For wind, solar, wave or tidal power plant(s) or unit(s), the following approach can be used provided that the electricity fed into the grid by the added power plant(s) or unit(s) addition is separately metered:

$EG_{PJ,y} = EG_{PJ_Add,y}$
Where:
$EG_{PJ,y}$ = Quantity of net electricity generation that is produced and fed into the grid as a result of the implementation of the CDM project activity in year y (MWh/yr)
$EG_{PJ_Add,y}$ = Quantity of net electricity generation supplied to the grid in year y by the project plant/unit that has been added under the project activity (MWh/yr)

For the project activity, option 2 is applied.

After simplification, the final result for calculating this project's baseline emission reduction is the following:

$BE_y = EG_{facility,y} * EF_{grid,CM,y}$ (for Fongwei and Longwei Wind Farms)
$BE_y = EG_{PJ_Add,y} * EF_{grid,CM,y}$ (for Chungwei and Tauwei Wind Farms)

During this monitoring period (01/04/2016 to 31/12/2016):

$EG_{facility,y}$	Quantity of net electricity generation supplied by the project plant/unit to the grid in year y	119,666.52	MWh/year
$EG_{PJ_Add,y}$	Quantity of net electricity generation supplied to the grid in year y by the project plant/unit that has been added		MWh/year

	under the project activity		
$EF_{grid,CM,y}$	Combined margin CO_2 emission factor	0.761	tCO_2e/MWh
BE_y	Baseline emission reductions	91,066	$tCO_2e/year$

E.2. Calculation of project emissions or actual net GHG removals by sinks

>>

As per ACM0002, the project emission for most renewable energy (including wind farm) project activities is zero ($PE_y = 0$).

E.3. Calculation of leakage

>>

For the leakage, according to ACM0002, no leakage emissions are considered. The main emissions potentially giving rise to leakage in the context of electric sector projects are emissions arising due to activities such as power plant construction and upstream emissions from fossil fuel use (e.g. extraction, processing, transport). These emissions sources are neglected.

Therefore, the leakage in this project is zero as well ($LE_y = 0$).

E.4. Summary of calculation of emission reductions or net anthropogenic GHG removals by sinks

Item	Baseline emissions or baseline net GHG removals by sinks (t CO_2e)	Project emissions or actual net GHG removals by sinks (t CO_2e)	Leakage (t CO_2e)	Emission reductions or net anthropogenic GHG removals by sinks (t CO_2e)
01/04/2016-31/12/2016	91,066	0	0	91,066

The project has not been registered as CDM project or under other voluntary carbon crediting scheme. The letter of Confirmation on avoiding double counting has been offered. There is no double counting for the emission reductions during this monitoring period.

E.5. Comparison of actual emission reductions or net anthropogenic GHG removals by sinks with estimates in registered PDD

According to the registered PDD of this project, the annually expected emission reduction of the project from electricity generation is 190,908 tCO2e. This monitoring period covers 01/04/2016-31/12/2016.Then the estimated emission reduction from electricity for this monitoring period is 91,066tCO2e. The comparison table is given as below.

Item	Values estimated in ex-ante calculation of registered PDD	Actual values achieved during this monitoring period
Emission reductions or GHG removals by sinks (t CO_2e)	143,835	91,066

E.6. Remarks on difference from estimated value in registered PDD

>>

The actual emission reduction amount of this monitoring period is 91,066 tCO2e, below the registered PDD's estimation amount (37% lower, as shown below). The reason is that i) the actual wind productions in this monitoring period were far under performance compared to the design, which made less wind energy available for electricity generation; ii) there are still 1 wind turbine not installed yet.

E.7. Actual emission reductions or net anthropogenic GHG removals by sinks during the first commitment period and the period from 1 January 2013 onwards

Item	Actual values achieved up to 31 December 2012	Actual values achieved from 1 January 2013 onwards
Emission reductions or GHG removals by sinks (t CO_2e)	N/A	91,066

SECTION F. Sustainable Indicators

1. Air Quality

The air quality indicator is roughly monitored via the project's electricity generation with reference to the atmospheric pollutant emissions associated with the fuel-based grid electricity generation in the region. Pollutant abatements is therefore be easily computed based on the fuel usage estimations per kWh power generation that is mentioned in the approved EIA report, as quoted in the SD matrix.
Therefore, calculation is done according to the national grid's announcement related to its SOx and NOx emissions.

According to the latest statistic data (2016 data), 229 kg of SOx, 230kg of NOx and 190 kg of TSP were averagely generated per GWh power generation7. . The total net generation within this monitoring period is 119.66652 GWh, which means that the project has mitigated approximately of 27.4 tonnes SOx, 27.52 tonnes NOx and 2.27 tonnes TSP during this monitoring period.

2. Quantitative employment and income generation

The project activity generates employment of 49 persons during the *operational period*. Details are described as the following:

1. Project development: 3 person in InfraVest Tauwei Wind Farm Project, 4 person in InfraVest Longwei Wind Farm Project, 4 person in InfraVest Fongwei Wind Farm Project, 4 person in InfraVest Chungwei Wind Farm Project
   Job descriptions:
   - Land use, rent contract and payment applications
   - Land use approval applications, contract renewal
   - EIA commitments implementation
   - Contract implementation regarding MOF, space rent, GIS maintenance, etc.

2. Administration and logistics: 3 person in InfraVest Tauwei Wind Farm Project, 5 person in InfraVest Longwei Wind Farm Project, 4 person in InfraVest Fongwei Wind Farm Project, 5 person in InfraVest Chungwei Wind Farm Project
   Job descriptions:
   - Project finances and accounting
   - Invoice and payment management, eg. sending monthly invoice to TPC, confirm payment
   - Monthly report and annual report writing

[7] http://www.taipower.com.tw/content/govern/govern01.aspx?MType=5&MSType=14

3. Wind farm operation: 3 person in InfraVest Tauwei Wind Farm Project, 5 person in InfraVest Longwei Wind Farm Project, 4 person in InfraVest Fongwei Wind Farm Project, 5 person in InfraVest Chungwei Wind Farm Project
   Job descriptions:
   - Wind farm operation, maintenance, and emergency measures, incl. WTG, substation, grid transmission, transportation, etc.
   - Power production calculation

Supporting documents provided to the DOE during site visit:

- Organizational chart of manpower allocation and responsibilities of each departments
- Health insurance records in local language

The technical and security staffs were trained by InfraVest and Labor Occupational Safety and Health Administration. Detail information about trainings is provided in the table below:

No.	Training Date	Training Content	Organizer
1	22/06/2016	Training about Maneuver with fire fighters	InfraVest
2	24/06/2016	Training about the process to apply the offshore wind farm approval	InfraVest
3	21/10/2016	Training about the wind farm development plan	InfraVest
4	28/10/2016	Training about the Safety practice training	Agriculture Committee of Administrative Institute
5	23/12/2016	Training about the wind farm technology	InfraVest

Welfare provided for their well being complies with the national regulations such as Labor Standards Act[8] and other related law.

Labor Standards Act covers fundamental regulations related to employment within the country, including prohibited compulsory labor, gender equality, etc. Related requirements such as minimum salary, and regulation of working hours are clarified as follows:

1. According to the Labor Standards Act Article 30[9], a worker shall not have regular working time in excess of eight hours a day and eighty-four hours every two weeks. Working hours in InfraVest is 8 hours a day, 5 days a week, as stated in its internal employment guidelines. Thus, the total working hours are 40 hours/week, which is in line with the law.
2. The minimum salary is regulated by relevant Act in Taiwan[10]. Since the labor insurance premiums are relative to the employee's compensation (as shown in Insurance Premium Chart on Council of

[8] http://laws.cla.gov.tw/Eng/FLAW/FLAWDAT01.asp?lsid=FL014930

[9] http://laws.cla.gov.tw/Eng/FLAW/FLAWDOC01.asp?lsid=FL014930&lno=30

[10] http://www.mol.gov.tw/cht/index.php?code=list&ids=157

http://www.mol.gov.tw/upload/cht/attachment/38d4a8737f87ebfb01687c23a50440e6.doc

NTD 18,780/month since 01/01/2012; NTD 19,047/month since 01/04/2013.

Labor Affairs website[11]), salaries of relevant employees can be found in the labor insurance list, which was provided to the DOE during the verification

Supporting Documents:

- Training Records provided by the project owner
- Welfare provided to the staffs: Labor Insurance e-list.
- Employees health insurance list

3 Other pollutants

According to the local stakeholder interview records in 2014, 2015 and 2016, there is no complaint received from the local stakeholder. However, the project owner installed the airtight windows for the residents who needed of InfraVest Fongwei Wind Farm Project in 06/2013 and 03/2014.

[11] http://www.bli.gov.tw/en/sub.aspx?a=qlpmP7AGer8%3d

Figure F-1 The picture of the installation of the airtight windows in Fongwei Wind Farm in 03/2014

Figure F-2 The picture of the installation of the airtight windows in Fongwei Wind Farm in 06/2013

Supporting documents:

(i). The local stakeholder interview records in 2014, 2015 and 2016.
(ii). The picture of the airtight windows installation
(iii). The records of the airtight windows installation

4 Biodiversity

According to the results of EIA[12], this project activity does not bring any impacts to the soil condition. However, InfraVest had made a commitment to do re-plantation of windbreaks in order to compensate on any damages caused by the construction.

The project owner has already completed replantation project. The replantation targets and the work completion progress of each area are listed as follows:

Wind Farm	Total Target Area	Completion progress
InfraVest Fongwei Wind Farm Project	6340.97	104%
InfraVest Longwei Wind Farm Project	18992.31	100%
InfraVest Chungwei Wind Farm Project	5709	100%
InfraVest Tauwei Wind Farm Project	1200	100%

[12] Changbin EIA report, Chapter 7, Section 7.1.1

Figure F-3 The re-plantation picture in InfraVest Fongwei Wind Farm

East of the wind farm	South of the wind farm
West of the wind farm	Near the wind farm (No.1)

Near the wind farm (No.7)	Near the wind farm (No.47)

Figure F-4 The re-plantation picture in InfraVest Longwei Wind Farm

Near the wind farm (No.1-5)	Full view
Near the wind farm (No.6)	Near the wind farm (No.7-10)

Figure F-5 The re-plantation picture in InfraVest Chungwei Wind Farm

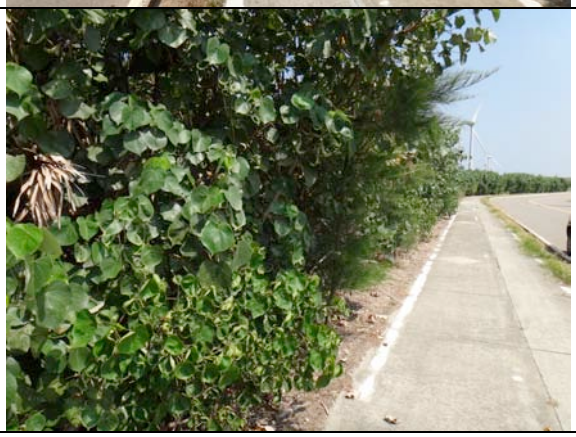

Figure F-6 The re-plantation picture in InfraVest Tauwei Wind Farm

Supporting documents:

(iv). InfraVest Fongwei Wind Farm Project : EIA commitment page from EIA amendment report dated 05/2014, Inspection records of replantation by InfraVest's personnel dated 27 /05/2014.
Letters from Forestry Bureau dated 08/08/2014,21/08/2015 , 23/03/2016 and 19/10/2016.

(v). InfraVest Longwei Wind Farm Project : EIA commitment page from EIA amendment report dated 11/2014
Letters from Forestry Bureau dated 04/02/2014, 18/02/2016,23/12/2016.

(vi). InfraVest Chungwei Wind Farm Project: EIA commitment page from EIA amendment report dated in 2014
Letters from Forestry Bureau dated 26/01/2015, 05/02/2016,30/11/2016.

(vii). InfraVest Tauwei Wind Farm Project: EIA commitment page from EIA amendment report dated 07/2009
Letters from Forestry Bureau dated 03/02/2015, 18/02/2016, 26/10/2016.

5 Landscape and visual impact

The overall color of wind tower is mainly white and the surroundings of wind towers are greened. The areas near the turbines are replanted according to the EIA report. The wind project sites of the chungwei wind farm became a popular tourist place now by the on-site interview. According to the local stakeholder interview records in 2014, 2015 and 2016, there is no complaint about the landscape and visual impact.

Figure F-7 The landscape picture in InfraVest Fongwei Wind Farm

Figure F-7 The landscape picture in InfraVest Longwei Wind Farm

Figure F-7 The landscape picture in InfraVest Chungwei Wind Farm

Figure F-7 The landscape picture in InfraVest Tauwei Wind Farm

Supporting documents:

(i). Local stakeholder interview records in 2014, 2015 and 2016

6 Electromagnetic interference and radiation

According to the Electromagnetic Measurement Monitoring Report by Industrial Technology Research Institute in 06/2010, the electromagnetic value of the wind turbine with 2.3 MW is 1.1 MG, which is less than the impact of the television at the same distances. It could conclude that the wind turbine electromagnetic impact of the proposed project could be ignored.

Further, there is no complaint about the electromagnetic impact according to the local stakeholder interview records in 2014, 2015 and 2016.

Supporting documents:

(ii). Electromagnetic Measurement Monitoring Report by Industrial Technology Research Institute in 06/2010

(iii). Local stakeholder interview records in 2014, 2015 and 2016.

7. Continuous input/grievance expression mechanism

Continuous input / grievance mechanism expression method and details, as discussed with local

stakeholders.

	Method Chosen (include all known details e.g. location of book, phone, number, identity of mediator)	Justification
Continuous Input / Grievance Expression Process Book	Grievance expression book in Village	kept by the leader of the villages
Telephone access	+886-2-2395-4886 (for project owner) +41227887080 (for GS)	Phone and mobile are very common for local residential. Local stakeholders can call the working staff of the project owner to express their comments, suggestion and complaint.
Internet/email access	info@infra-vest.com (for project owner) info@goldstandard.org (for GS)	Local stakeholders can send email to the project owner to express their comments, suggestion and complaint.
Nominated Independent Mediator (optional)	No	This is optional

Appendix 1. Contact information of project participants and responsible persons/ entities

Project participant and/or responsible person/ entity	☒ Project participant ☐ Responsible person/ entity for completing the CDM-MR-FORM
Organization name	InfraVest Wind Power Group
Street/P.O. Box	10-2F, No. 9, Sec. 2, Roosevelt Rd.
Building	
City	Taipei
State/Region	
Postcode	100
Country	Taiwan
Telephone	+886 2 2395 4886
Fax	+886 2 2395 1580
E-mail	info@infra-vest.com
Website	http://www.infra-vest.com/
Contact person	Karl Eugen Feifel
Title	President
Salutation	Dr.
Last name	Feifel
Middle name	Eugen
First name	Karl
Department	
Mobile	
Direct fax	
Direct tel.	
Personal e-mail	feifel@infra-vest.com

Project participant and/or responsible person/ entity	☒ Project participant ☐ Responsible person/ entity for completing the CDM-MR-FORM
Organization name	South Pole Carbon Asset Management Ltd.
Street/P.O. Box	Technoparkstrasse 1
Building	
City	Zurich
State/Region	
Postcode	8005
Country	Switzerland
Telephone	+41 43 501 35 50
Fax	+41 43 501 35 99
E-mail	info@southpolecarbon.com
Website	www.southpolecarbon.com
Contact person	Renat Heuberger
Title	
Salutation	Mr.
Last name	Heuberger
Middle name	
First name	Renat
Department	
Mobile	
Direct fax	+41 43 501 35 99
Direct tel.	+41 43 501 35 99
Personal e-mail	r.heuberger@southpolecarbon.com