CLEAN DEVELOPMENT MECHANISM
PROJECT DESIGN DOCUMENT FORM (CDM-PDD)
Version 03 - in effect as of: 28 July 2006

CONTENTS

A. General description of project activity

B. Application of a baseline and monitoring methodology

C. Duration of the project activity / crediting period

D. Environmental impacts

E. Stakeholders' comments

Annexes

Annex 1: Contact information on participants in the project activity

Annex 2: Information regarding public funding

Annex 3: Baseline information

Annex 4: Monitoring plan

SECTION A. General description of project activity

A.1. Title of the project activity:

>>
Title: Oaxaca IV Wind Energy Project
Version: Version 2.0
Date: 23/12/2011

A.2. Description of the project activity:

>>
The objective of the project activity is the construction of a wind farm with 102 MW installed capacity; the renewable energy will be provided to the Mexican grid system and therefore results in the greenhouse gas (GHG) emissions reduction because in the absence of the project activity the power would be generated by the Mexican grid system which depends mainly upon fossil fuels usage.

In the current scenario, so as in the baseline scenario, the power units of the Mexican national grid system which are mainly based in the utilization of fossil fuel sources, have been providing the electricity demand to the national grid users, the project activity will contribute in increasing the renewable energy sources share of the grid system reducing its total emission rate per kilowatt-hour generated.

Renewable energies, such as wind, are essential for minimizing the effects of the climate change and Mexico has extremely high wind resources mainly in the zone of "El Istmo de Tehuantepec". In 2002, National Renewable Energy Laboratory (NREL) completed a high-resolution wind resource map for the State of Oaxaca NREL's resource mapping revealed 33,000 MW of wind potential in the Isthmus region alone in Oaxaca, with over 6,000 MW of usable wind resource; however, in 2009 Mexico had a participation of 0.13% installed capacity worldwide (202 MW).

Althought the development of wind farms improves the country's sustainability, Mexico's electric generation is mainly based on fossil fuels because the country has great petroleum reserves. Electricity generation through the usage of fossil fuels presents the advantage of having almost total control over the production, while in the wind farms there is a dependence on the variation on the wind availability conditions giving some uncertainty for the project.

The project complies with all country regulations and permits, and contributes to sustainable development at the local, regional and global levels in the following ways:

Environmental and social benefits other than GHG emissions reduction

In addition to lower GHG emissions, other environmental and social benefits would include:

- Use of renewable resources as energy source.
- Enforcement of environmental sustainability avoiding exploitation of natural resources such as coal and natural gas that would have been used to generate electricity in the fossil fuel based power plants in absence of the project activity.
- Employment generation in the construction, operation and maintenance stages.
- An additional income to the landowners without sacrificing the current ground use.
- Attraction of foreign capital.

- Diversification of the national energy portfolio, which is currently mostly occupied by conventional fossil fuels.
- The project activity does not generate any significant negative environmental impact.
- Some regions within the country don't currently have energy generation infrastructure; the project activity will contribute to the improvement of the current situation satisfying the growing demand for electricity enhancing energy distribution to more isolated zones.
- The project participant is implementing a social sustainability plan in Oaxaca to contribute to the development of the local communities in three different areas: basic rights, basic services, and sustainability.

Boundaries

The boundaries for the project activity in accordance with the chosen methodology are the site where the wind power plant is going to be installed and all power plants connected physically to the electricity system that the CDM project power plant is connected to.

The electricity grid that is relevant for the determination of baseline emissions was identified as the National Interconnected Grid (Sistema Interconectado Nacional "SIN").

A.3. Project participants:

>>

Name of Party involved (*) ((host) indicates a host Party)	**Private and/or public entity(ies) project participants (*) (as applicable)**	**Kindly indicate if the Party involved wishes to be considered as project participant (Yes/No)**
México (Host)	CE Oaxaca Cuatro S. de R.L. de C.V. (Private entity)	No
(*) In accordance with the CDM modalities and procedures, at the time of making the CDM-PDD public at the stage of validation, a Party involved may or may not have provided its approval. At the time of requesting registration, the approval by the Party(ies) involved is required.		

Table 1. Project participants.

The project participant, CE Oaxaca Cuatro Sociedad de Responsabilidad Limitada de Capital Variable is a company created for a specific purpose and its objective is the promotion of renewable energy projects.

A.4. Technical description of the project activity:

A.4.1. Location of the project activity:

>>

A.4.1.1. Host Party(ies):

>>

Mexico.

A.4.1.2. Region/State/Province etc.:

>>
Region of Tehuantepec, Oaxaca state.

A.4.1.3. City/Town/Community etc.:

>>
La Venta Municipality.

A.4.1.4. Details of physical location, including information allowing the unique identification of this project activity (maximum one page):

>>
The project activity will be located in La Venta municipality, on coordinates 16°36'36.21" N and 94°47'23.98" W (decimal coordinates: 16.61005925 latitude and -94.78999567 longitude).

Figure 1. Localization of the project activity.

A.4.2. Category(ies) of project activity:

>>

Sectoral Scope 1. Energy Industries (renewable - / non-renewable sources).

A.4.3. Technology to be employed by the project activity:

>>

The project is a 102 MW wind power project, expected to produce 422,076 MWh per annum with an average capacity factor of 47.24%. The operational lifetime is 20 years.

Total Power Capacity	102	MW
Turbine	IEC Ia	
Rated Power per turbine	1.5	MW
Cut in-cut-out wind	4 – 25	m/s
Generator voltage	12,000	V
No. of turbines	68	-
Equivalent annual operating hours	4,138	Hrs
Annual Production	422,076	MWh
Capacity factor	47.24	%
Transmission line length	32.25	Km
Transmission line Voltage	230	kV
Diameter	70	m
Swept area	3,848.5	m^2
Hub Heigth	80	m
Nominal rotational speed	20.2	rpm

Table 2. Power plant characteristics.

AW – 1500 is a wind turbine fabricated by Acciona, a company with 20 years experience of leadership in the sector, with 8,992 MW installed capacity by end of 2009, of which 7,702 MW installed correspond to wind power.

The AW-1500 is a 1500 kW power-rated horizontal shaft wind turbine, with three blades, variable speed, 12 kV rated voltage and frequency of 60 Hz.; Certified by Germanischer Lloyd (GL) for a wide range of wind types. The turbine is cover made of fiberglass-reinforced polyester that protect of weather inclemency.

The wind turbine has a control software for monitoring and automatically managing the operation. A double-fed asynchronous generator of IGBT's (PMW) that improves voltage and frequency stability, supplies reactive power to the grid when required and operates the power factor in inductive or capacitive power as required.

The line to be connected to the Federal Electricity Commission ("Comisión Federal de Electricidad", CFE) transformer will be a 230 kV and 32.25 km long line, running from the wind farm control house to the CFE transformer located in the Ixtepec substation.

A.4.4. Estimated amount of emission reductions over the chosen crediting period:

>>

The crediting period starts in May 16, 2012, with an overall reduction of 2,450,150 tCO2e for the wind farm.

Year	Annual estimation of emission reductions in tonnes of CO2 e

2012	154,393
2013	245,015
2014	245,015
2015	245,015
2016	245,015
2017	245,015
2018	245,015
2019	245,015
2020	245,015
2021	245,015
2022	90,622
Total estimated reductions (tonnes of CO2 e)	**2,450,150**
Total number of crediting years	10 Years
Annual average over the crediting period of estimated reductions (tonnes of CO2 e)	245,015

Table 3. Emission reductions.

A.4.5. Public funding of the project activity:

>>

No public funding is used for this project activity.

SECTION B. Application of a baseline and monitoring methodology

B.1. Title and reference of the approved baseline and monitoring methodology applied to the project activity:

>>

The methodology ACM0002 version 12.1.0 will be used: "Consolidated baseline methodology for grid-connected electricity generation from renewable sources".

This methodology also refers to the approved versions of the following tools:

- Tool to calculate the emission factor for an electricity system (ver. 02.2.1);
- Tool for the demonstration and assessment of additionality (ver. 05.2);
- Tool to calculate project or leakage CO2 emissions from fossil fuel combustion (ver. 02).

B.2. Justification of the choice of the methodology and why it is applicable to the project activity:

>>

The methodology ACM0002 is applicable to:

"Grid-connected renewable power generation project activities that (a) install a new power plant at a site where no renewable power plant was operated prior to the implementation of the project activity (greenfield plant); (b) involve a capacity addition; (c) involve a retrofit of (an) existing plant(s); or (d) involve a replacement of (an) existing plant(s)".

The project activity consists in the installation of a new power plant for renewable electricity generation that will be connected to the grid, at a site where no renewable power plant was operated prior to the implementation of the project activity (greenfield plant).

"*The project activity is the installation, capacity addition, retrofit or replacement of a power plant/unit of one of the following types: hydro power/unit (either with a run-of-river reservoir or an accumulation reservoir), wind power plant/unit, geothermal power plant/unit, solar power plant/unit, wave power plant/unit or tidal power plant/unit"*

The project activity is applicable as it fits in one of the types of power plants included in the methodology, i.e. a wind power plant.

The geographic and system boundaries for the relevant electricity grid are clearly marked, and information on the grid characteristics is provided in the Electric Sector Prospective ("*Prospectiva del Sector Eléctrico")*, published by the Mexican Energy Ministry ("Secretaría de Energía", SENER). These boundaries include all the geographic areas and infrastructures within the National Interconnected Grid (SIN), as well as energy exports and imports outside the Mexican energy system.

B.3. Description of the sources and gases included in the project boundary:

>>

The greenhouse gases included in the project boundary according to the methodology ACM0002 v. 12.1.0 are shown in table 4.

Source	Gas	Included?	Justification/Explanation

Baseline	CO2 emissions from electricity generation in fossil fuel fired power plants that are displaced due to the project activity.	CO_2	Yes	Main emission source. All power plants interconnected to the Mexican grid are included.
		CH_4	No	Minor emission source.
		N_2O	No	Minor emission source.
Project Activity	For geothermal power plants, fugitive emissions of CH4 and CO2 from noncondensable gases contained in geothermal steam.	CO_2	No	Not applicable to the proposed project activity
		CH_4	No	Not applicable to the proposed project activity
		N_2O	No	Not applicable to the proposed project activity
	CO2 emissions from combustion of fossil fuels for electricity generation in solar thermal power plants and geothermal power plants.	CO_2	No	Not applicable to the proposed project activity
		CH_4	No	Not applicable to the proposed project activity
		N_2O	No	Not applicable to the proposed project activity
	For hydro power plants, emissions of CH4 from the reservoir.	CO_2	No	Not applicable to the proposed project activity
		CH_4	No	Not applicable to the proposed project activity
		N_2O	No	Not applicable to the proposed project activity

Table 4. Sources and gases included in the project boundary.

Baseline emissions are from fossil fuel power plants interconnected to the national grid; according to the methodology ACM0002 v. 12.1.0 the project activity does not consider source of emissions.

The flow diagram for the project is shown in the Figure 2:

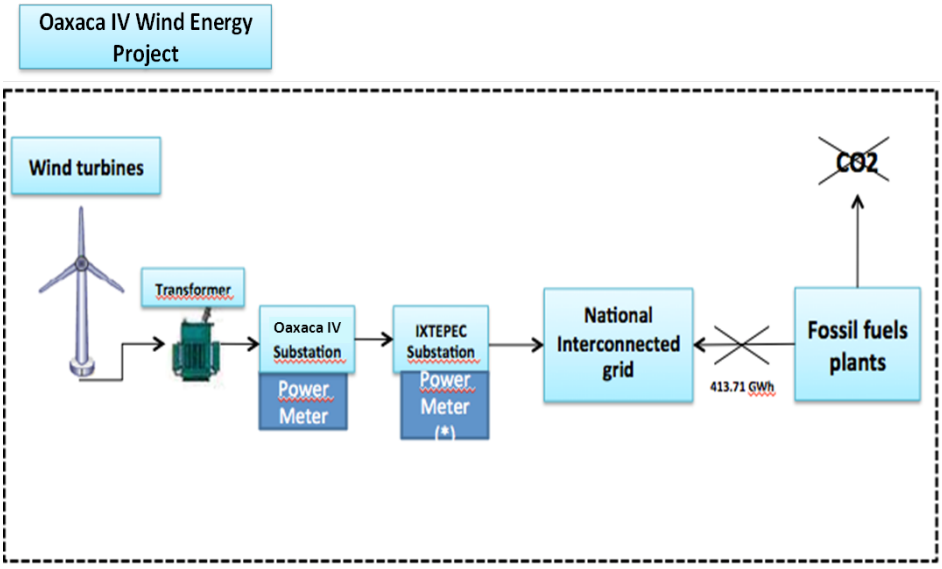

Figure 2. Project boundary.

(*) The ION meters located in the Ixtepec Substation will communicate with the ION meters from the Oaxaca IV Substation, to determine the energy provided from Oaxaca IV.

The methodology ACM0002 Ver. 12.1.0 mentions the following statement about the project boundary:
The spatial extent of the project boundary includes the project power plant and all power plants connected physically to the electricity system that the CDM project power plant is connected to. For that reason in the figure 2 the project boundary includes the power plant and the national interconnected grid (SIN).

B.4. Description of how the baseline scenario is identified and description of the identified baseline scenario:

>>
According to the methodology ACM0002 Ver. 12.1.0, if the project activity is the installation of a new grid-connected renewable power plant/unit, the baseline scenario is the following:
Electricity delivered to the grid by the project activity would have otherwise been generated by the operation of grid-connected power plants and by the addition of new generation sources, as reflected in the combined margin (CM) calculations described in the "Tool to calculate the emission factor for an electricity system".

According to the projection elaborated by SENER in its Electric Sector Prospective 2009 - 2024 for the electricity generation in Mexico organized by type of technology used, the use of fossil fuels prevails in the next fifteen years. The productions percentages for 2009 and the forecast for 2024 are shown in table 5.

	2009	2024
Fossil Fuel	81.8%	62.9%
Nuclear	4.6%	2.9%
Geothermal	2.8%	1.7%
Wind power	0.1%	0.5%
Hydropower	10.7%	9.1%
Free	0%	22.8%
Total (GWh)	228,953	415,899
Total low/cost must run (%)	18.2%	14.2%

Table 5. Source: SENER "Prospectiva del sector eléctrico 2009-2024. Gráfica 46 p. 142"

The installed power forecast in Mexico for 2011 is 52,596 MW, which is the year where the first stage operations will be commissioned, so the impact of 102 MW would not account for more than 0.19% of the system's generation mix of electricity.

An important issue to consider is that the plant factor for a wind farm is considerably lower than for the fossil fuel power plants. Project activity provides 47.24% of the output, therefore, due to the uncertainty of resource availability implied, wind power should be considered as an additional energy source for the grid and not as the main one.

From the above, it can be concluded that the electricity generation from fossil fuel plants is identified as the baseline scenario.

B.5. Description of how the anthropogenic emissions of GHG by sources are reduced below those that would have occurred in the absence of the registered CDM project activity (assessment and demonstration of additionality):

>>

Timeline of events of the project activity

Date	Event	Support/Reference
11/02/2010	Date for presenting offers to the public tender organized by CFE	CFE tender information
08/03/2010	Date when CE Oaxaca Cuatro S. de R.L. de C.V. won the CFE tender by the award of contract.	CFE resolution for the award of contract.
08/04/2010	Date when CE Oaxaca Cuatro S. de R.L. de C.V. signed the PPA with CFE	Copy of the PPA
16/04/2010	Date when CE Oaxaca Cuatro S. de R.L. de C.V. signed the Engineering, Procurement and Construction (EPC) contract.	Copy of the EPC contract.
13/05/2010	Date when the Regulatory Energy Commission (CRE) gave the Independent Production permit.	Copy of the Independent Production permit.
10/06/2010	Date that CE Oaxaca Cuatro sent the Prior Consideration of the CDM of the project Oaxaca IV Wind Farm to the UNFCCC and the Mexican DNA (Interministerial Commission on Climate Change)	Copies of the emails, in this emails CE Oaxaca Cuatro sent the Prior Consideration of the CDM to the UNFCC and the Interministerial Comission on Climate Change
14/06/2010	Date that Interministerial Commission on Climate Change confirm the reception of the Prior Consideration of the CDM	Copy of the email, in this email the Interministerial Comission on Climate Change confirms the reception of the Prior Consideration of the CDM to CE Oaxaca Cuatro
06/07/2010	Date that UNFCCC confirm the reception of the Prior Consideration of the CDM	Copy of the email, in this email the UNFCCC confirms the reception of the Prior Consideration of the CDM to CE Oaxaca Cuatro
14/07/2010	Date when the Construction License was obtained.	Copy of the Construction License.
14/07/2010	Date when the license of scheme change of land use, from agricultural to joint use (agricultural-industrial) was obtained.	Copy of the License of scheme change.

27/10/2010	Starting date of the public comment period for validation on the UNFCCC website	UNFCCC reference
12/11/2010	Date of issuance of the Letter of Approval by the Interministerial Commission on Climate Change (Mexican DNA)	Copy of the Letter of Approval

Table 6. Timeline of events of the project activity

The timeline of events proves that the project activity has been considered as CDM project since its origin, this is proved with the "Prior Consideration of the CDM Form" document that CE Oaxaca Cuatro sent to the UNFCCC and to the Mexican DNA within six months of the project activity starting date.

Analysis of the additionality of the project

The next table shows the official forecast of the Mexican electricity generation mix; the electric generation in the next years will be based mainly in fossil fuels; that is why the project activity will reduce GHG emissions because in absence of the project the 102 MW would be consumed from the national grid. The project is expected to reduce 2,450,150 tCO2 during the 10 years of the crediting period.

Power (MW)	2008	2009	2010	2011	2012	2013	2014	2015	2016	2017	2018	% as of 2018
Hydro	11,343	11,433	11,523	11,523	12,273	12,273	12,365	12,365	12,365	12,365	12,785	20.04%
CC	16,912	17,312	17,778	18,012	18,246	20,077	20,077	21,147	21,617	22,651	25,797	40.43%
Diesel	2,653	2,734	2,496	2,334	2,334	2,742	2,654	2,476	2,433	2,538	2,538	3.98%
Internal	213	213	213	224	281	323	334	420	420	420	420	0.66%
Wind	86	86	187	593	593	897	1,201	1,505	1,809	1,809	1,809	2.84%
Free*	0	0	0	0	0	0	0	954	2,317	2,946	2,946	4.62%
Fuel-Oil	12,866	12,556	12,202	12,052	11,452	10,702	10,402	10,086	9,343	8,925	8,925	13.99%
Geo	965	965	890	917	976	976	1,006	1,006	1,006	1,006	1,016	1.59%
Coal	2,600	2,600	3,278	3,278	3,608	3,608	3,608	3,608	3,608	3,608	3,608	5.65%
Dual	2,100	2,100	2,100	2,100	2,100	2,100	2,100	2,100	2,100	2,100	2,100	3.29%
Nuclear	1,365	1,365	1,561	1,561	1,561	1,561	1,561	1,561	1,561	1,561	1,561	2.45%
Mobile Plants	3	3	3	3	3	3	3	3	3	3	3	0.00%
Fluidized bed boiler	0	0	0	0	300	300	300	300	300	300	300	0.47%
Total	**51,106**	**51,367**	**52,231**	**52,597**	**53,727**	**55,562**	**55,611**	**57,531**	**58,882**	**60,232**	**63,808**	**100.00%**

Table 7. Source: SENER. "Prospectiva del sector eléctrico 2009-2024 Chart 37 p. 140"; *: "Free" means that the exact type of power plant is not defined yet. Free power plants are simulated as natural gas power plants.

According to long-term forecasting, by 2018 wind power installations will represent 2.84% (not including the power capacity of the proposed project activity) within the Mexican energy system in 2018 and 1.13% in 2011, which is the year of the operation stage. Thus, power produced from this project will have no impact on baseline calculations. The Mexican energy system will be mainly based on Combined Cycle. Estimations of hydro power point to it reaching approximately 20% by 2018.

It is important to note that it is very unlikely that the wind farms projected in this forecast would operate in case that they don't receive any kind of incentive such as the CERs for CDM projects.

Analysis of the additionality of the project

Even though in Mexico, especially in the zone of the project activity (south-southeast according the Prospectiva del Sector Eléctrico 2009-2024) presents good quality wind resources, wind power generation is still as not an attractive investment in a business as-usual-scenario.

To demonstrate its additionality, the "Tool for demonstration and assessment of additionality ver. 05.2" was applied, following all steps defined. These steps will demonstrate that the proposed project activity is not the baseline scenario.

Step 1. Identification of alternatives to the project activity consistent with current laws and regulations

Definition of alternative scenarios to the project activity that otherwise could be implemented in absence of the project activity.

Sub-step 1a. Define alternatives to the project activity.

The project activity consists in clean energy generation that will be exported to the Mexican electricity grid. The alternatives would be that other power plants provided the electricity to the grid; the alternatives include:

1. The proposed project activity undertaken without being registered as a CDM project activity; a wind farm with a capacity of 102 MW and a plant load factor of 47.24% developed without the CERs incentive.
2. Continuation of the current situation: CE Oaxaca Cuatro S. de R.L. de C.V. does not implement the project; hence its consumers will continue using the electricity from the national grid.
3. The same power generation through power plants from renewable sources like biomass or hydro power plants.

Due to the size of the project activity, hydropower plants could only be a viable alternative if there was either a group of minihydro power plants or at least one large hydropower plant. Moreover hydro is unlikely to happen because the installed capacity expected for 2011 (starting year of the project activity) to 2017 in the zone will be the same at the moment of the project activity *"Electric Sector Prospective 2009-2024, Prospectiva del sector eléctrico 2009-2024"*.

As per the Prospective no biomass power plants are included in the forecasting for the installed capacity for 2011 or later. Due to the fact that in order to install a biomass plant as an independent producer it needs to be included in the forecasting, this means it is not likely that this will happen. Also, the technological and economical barriers related to biomass power plants (supply infrastructure, biomass management and preparation, high transportation costs, etc) would prevent the implementation of this type of project, therefore a biomass power plant is not a likely baseline scenario.

It is clear that the wind farm could not be developed without the incentive of the CDM registration due to technical and economical obstacles. No wind farm in Mexico has been developed without the CERs incentive. Other renewable sources for power generation are not a likely baseline scenario as it has been already explained.

Therefore, the baseline scenario would be the continuation of the current practice, i.e. CE Oaxaca Cuatro S. de R.L. de C.V. does not develop the wind farm and its consumers continue using electricity coming from the national grid.

Sub-step 1b. Consistency with mandatory laws and regulations.

In México, when the government considers the construction of a new power plant, public tenders are called by the CFE. The public tender winner is determined by CFE considering the minimum cost per MWh offered. Thus, any kind of project coming from renewable sources would have to compete against conventional energies within a certain price context, making this an unfeasible venture for wind farm and renewable energy projects. In order to encourage private investors to develop power plants from renewable sources, the Regulatory Energy Commission ("Comisión Reguladora de Energía", CRE) has created different formulas in lieu of participating in public tenders.

These formulas are described in article 36 of the "Public Service of Electrical Energy Law" ("Ley del Servicio Público de Energía Eléctrica") and can be found at: http://www.diputados.gob.mx/LeyesBiblio/pdf/99.pdf

- Self-consumption ("autoabastecimiento"): For self-consumption purposes, it is possible to create a company co-owned by the power generator and the consumer following some specific rules. The energy not used by the consumer can be stored in a "virtual storage" managed by CFE, so real-time generation does not have to match exactly with real-time consumption. Total energy generated not used by the consumer has to be sold to CFE at a fixed price.
- Cogeneration ("cogeneración"): For power generation combined with steam or other thermal energy production or both. It is mandatory that the efficiency of the total of electricity generation and heat consumption are higher than each part independently.
- Independent production ("producción independiente"): It is mandatory to sell the energy to CFE at a fixed price, and to be included in CFE expansion plans.
- Small energy producers ("pequeña producción"): This applies for power plants smaller than 30 MW of installed capacity.

CE Oaxaca Cuatro S. de R.L. de C.V. is an independent production company; therefore, by law the electric energy must be sold to CFE at a previously agreed price; taking this into account, the project activity is not financially feasible without the revenue from the sale of certified emission reductions (CER's).The investment analysis will be used to demonstrate the project's additionality.

Step 2. Investment analysis

Sub-Step 2a. Determinate appropriate analysis method

Since the proposed project will earn revenues from not only CDM but also electricity sales, related the simple cost analysis method is not appropriate. Instead, benchmark analysis (Option III) will be applied.
Sub-step 2b. Option III. Apply benchmark analysis

For the benchmark analysis, the IRR is considered the most suitable indicator for the project type. The post-tax project IRR will be used, since it includes all in and out cash flows.

According to the "Tool for the demonstration and assessment of additionality" (Version 05.2) option a) was used to determine the discount rate and benchmark used for the benchmark analysis.

(a) Government bond rates, increased by a suitable risk premium to reflect private investment and/or the project type, as substantiated by an independent (financial) expert or documented by official publicly available financial data;

In order to estimate an adequate discount rate to evaluate the project activity financial feasibility the following was considered:

- Government bond rates: The Bank of Mexico indicates that the fixed bond rate for 20 years in Mexico is 8.47% and the fixed bond rate for 10 years is 7.81%[1]. With the intention to have a conservative approach the fixed bond rate for 10 years will be used for the benchmark calculation (7.81%).

- Country Risk: The Organisation for Economic Co-operation and Development (OECD) publishes a country risk for some countries taking into account two basic components; the Country Risk Assessment Model (CRAM) and the qualitative assessment of the Model results; the value applicable to Mexico at January 2010 is 3.0%.[2]

  In other hand, the New York University – Leonard N. Stern School of Business published a report of "Equity Risk Premiums (ERP): Determinants, Estimation and Implications"[3]. In its 2010 edition the total equity risk premium for Mexico is 5.77%. The equity risk premium represents an additional risk to the risk-free rate that are the government bond rates, the value of the premium will vary as the risk in a particular stock, or in the stock market as a whole, changes; high-risk investments are compensated with a higher premium.

  Due to the nature of the project, and as a conservative assumption, the country risk value for Mexico (3.0%) was used.

- Technology risk: In Mexico there is no information available about reliable technology risk premium values related to renewable and/or wind energy project. Hence, as a conservative approach, this risk was not considered for the benchmark value.

From the above the total benchmark value would be 10.81%.

Sub-step 2c. Calculation and comparison of financial indicators

CE Oaxaca Cuatro S. de R.L. de C.V. as an independent production company has only one customer, the Federal Electricity Commission ("Comisión Federal de Electricidad", CFE).

The project investment analysis, on a 20-year Project basis, this price would yield:

Annual Production (MWh/year)	422,076

[1] Government bond rate at January 2010. http://www.banxico.org.mx/SieInternet/consultarDirectorioInternetAction.do?accion=consultarCuadro&idCuadro=CF114&sector=18&locale=es

[2] January 2010. http://www.oecd.org/document/49/0,2340,en_2649_34171_1901105_1_1_1_1,00.html

[3] http://pages.stern.nyu.edu/~adamodar/pdfiles/papers/ERP2010.pdf

Average Sales Price (US$/MWh)	98.5
Average Annual Income (US$)	41,553,382
Total Investment (US$)	205,726,000
Average Annual Operational Costs[4] (US$)	10,952,446
Project duration (years)	20
IRR (%) without CERs sales	8.78%
IRR (%) with CERs sales (16.6 US$/tCO2)	9.79%

Table 8. Financial Characteristics.

The IRR of the project activity without the CER's incomes (8.78%) is below the financial benchmark (10.81%), demonstrating that the project activity by itself is not economically feasible; if the project activity obtain the status of "Registered" and therefore the incentive of the CDM, the post-tax project IRR with CER's (9.79%) is still below than the benchmark value (10.81%). However, the environmental and sustainable development contribution to the country, the derived image and economical benefits that CE Oaxaca Cuatro S. de R.L. de C.V. will acquired derived from the project activity registration as a CDM project activity are a substantial and important incentive for the project implementation.

Sub-step 2d. Sensitivity Analysis

Indicators such as CER price, total investment, capacity factor and operation and maintenance (O&M) costs were selected for sensitivity analysis, these financial indicators fluctuated within the range of -10% to +10%. A sensitivity analysis to the electricity tariff is not undertaken, as it is not relevant in the case of a project such as this one, which sells its energy directly to CFE, under a fixed PPA. The impact of the capacity factor on IRR is most significant.

Total Investment	**-10%**	**-5%**	**5%**	**10%**
Project IRR (%)	10.09	9.41	8.20	7.66

Capacity factor	**-10%**	**-5%**	**5%**	**10%**
Project IRR (%)	7.39	8.10	9.45	10.09

O&M	**-10%**	**-5%**	**5%**	**10%**
Project IRR (%)	9.03	8.91	8.66	8.53

CER price	**-10%**	**-5%**	**5%**	**10%**
Project IRR (%)	9.69	9.74	9.85	9.90

Table 9. Financial Parameters.

The sensitivity analysis shows that even with an increase or decrease in CER price, investment, capacity factor and O&M costs increases or decreases, the benchmark value isn't reached by the post-tax project IRR.

Therefore, the additionality of the project activity is clearly demonstrated based on the Investment analysis, Step 2.

Step 3. Barrier analysis

[4] Average annual operational costs includes: O&M costs, administration costs, land rent, legal, auditing and insurance costs.

N/A

Step 4. Common practice analysis

Sub-step 4a. Analyze other activities similar to the proposed project activity.

In Mexico, almost all the similar activities to the project are wind farms projects which are looking for CDM related incomes for their development, such as:

Project Activity	Status	Date
Bii Nee Stipa	Registered	Dec 2005
Eurus Wind Farm	Registered	Jan 2007
Bii Nee Stipa III	Registered	Feb 2007
La Venta II	Registered	Jun 2007
La Ventosa Wind Energy Project	Registered	Dec 2007
Santo Domingo Wind Energy Project	Registered	Nov 2008
Bii Stinu Wind Energy Project	Registered	Jan 2009
Fuerza Eólica del Istmo Wind Farm	Registered	Aug 2009
Eléctrica del Valle de México Wind Farm	Registered	Feb 2011
Piedra Larga Wind Farm	Registered	Apr 2011
Oaxaca I Wind Farm	Registered	Apr 2011
Santa Catarina Wind Farm Project	Validation	Nov 2007
Loreto Bay Wind Farm Project	Validation	Nov 2007
San Dionisio Wind Farm	Validation	Oct 2009
Istmeño Wind Farm	Validation	Oct 2009
El Porvenir I Wind Farm	Validation	Oct 2010
Piedra Larga Fase II Wind Farm	Validation	Dec 2010
Fuerza Eólica del Istmo Phase II Wind Farm	Validation	Jan 2011

Table 10. Wind Farms Project Activities in Mexico.

Sub-step 4b. Discuss any similar options that are occurring.

The only project which is not receiving economic incentives from CDM is La Venta III, with 101 MW of installed capacity, it is receiving another incentive from the Development Project for Large Scale Renewable Energy "Proyecto de Desarrollo de Energías Renovable a Gran Escala (PERGE)". For this reason the CDM incomes are not necessary for its development.

Other similar projects that have been recently announced, rely on additional income from registration as a CDM project in order to overcome the existing barriers.

As a result of applying the "Tool for the demonstration and assessment of additionality" ver. 05.2 it is concluded that based on conservative approaches and assumptions the proposed project activity "Oaxaca IV Wind Energy Project" fulfills all the additionality requirements demonstrating that the CDM registration is required and fundamental for its implementation.

B.6. Emission reductions:

B.6.1. Explanation of methodological choices:

>>

According to the methodology ACM002 v.12.1.0 the emission reductions are:

$$ER_y = BE_y - PE_y \quad (1)$$

Where:

ER_y	Emissions reductions in year *y* (tCO2e/yr)
BE_y	Baseline emissions in year *y* (tCO2/yr)
PE_y	Project emissions in year *y* (tCO2e/yr)

Baseline emissions

The baseline scenario represents the electricity that would have otherwise been generated by the operation of the grid-connected power plants and by the addition of new generation sources.

The baseline emissions are calculated as follows:

$$BE_y = EG_{PJ,y} \cdot EF_{grid,CM,y} \quad (2)$$

Where:

BE_y	Baseline emission in year *y* (tCO2/yr)
$EG_{PJ,y}$	Quantity of net electricity generation that is produced and fed into the grid as a result of the implementation of the CDM project activity in year *y* (MWh/yr)
$EF_{grid,CM,y}$	Combined margin CO2 emission factor for grid connected power generation in year y calculated using the "Tool to calculate the emission factor for an electricity system" (tCO2/MWh)

For the quantity of net energy generation ($EG_{PJ,y}$) option a) "Greenfield renewable energy power plants" is applicable because the project activity is a new grid-connected renewable power plant at a site where no renewable power plant was operated prior to the implementation of the project activity, and

$$EG_{PJ,y} = EG_{facility,y} \quad (3)$$

Where:

$EG_{PJ,y}$	Quantity of net electricity generation that is produced and fed into the grid as a result of the implementation of the CDM project activity in year *y* (MWh/yr).
$EG_{facility,y}$	Quantity of net electricity generation supplied by the project plant/unit to the grid in year *y* (MWh/yr).

Therefore, the quantity of net energy generation that is produced and fed into the grid for the project activity is 422,076 MWh/yr.

For the calculation of the emission factor, which will yield the total equivalent CO_2 emission reduction for the whole crediting period, a Combined Margin (CM) will be used, in accordance with the "Tool to calculate the emission factor for an electricity system ver. 02.2.1".

The steps to following for calculate emission factor are:

1. Identify the relevant electricity systems.

2. Choose whether to include off-grid power plants in the project electricity system (optional).
3. Select a method to determine the operating margin (OM).
4. Calculate the operating margin emission factor according to the selected method.
5. Calculate the build margin (BM) emission factor.
6. Calculate the combined margin (CM) emissions factor.

1. Identify the relevant electricity systems

The regions in the Mexican grid are interconnected; for this, the relevant electric power system is the National Interconnected Grid (Source: SENER "Prospectiva Sector Eléctrico 2009-2024").

For determining the Operating Margin (OM) emission factor, it is necessary to determine the net electricity imports. There are no imports from other systems inside Mexico. The Mexican electricity imports and exports with other electric systems in other countries (imports from USA and exports to Belize) are:

	2006	**2007**	**2008**	**% of total generation**
Imports (GWh)	523	277	351	0.16%
Exports (GWh)	1,299	1,451	1,452	0.67%
Net Exchange (GWh)	776	1,174	1,101	-

Table 11. Source: SENER. "Prospectiva del sector eléctrico 2009-2024. Chart 21 p. 110"

For imports from an on-line electricity system located in another country, the emission factor is 0 tCO_2/MWh in order to ensure a conservative approach. Electricity exports will not be subtracted from electricity generation data used for calculating the baseline emission factor.

For the calculation of the build margin emission factor, the spatial extent is limited to the project electricity system (National Interconnected Grid). As shows the Table 11, in last years the imports has not been increased and for this reason the imports are not considered as a build margin source.

2. Choose whether to include off-grid power plants in the project electricity system (optional)

Project participants may choose between the following two options to calculate the operating margin and build margin emission factor:

- Option I: Only grid power plants are included in the calculation.
- Option II: Both grid power plants and off-grid power plants are included in the calculation.

CE Oaxaca Cuatro S. de R.L. de C.V. has chosen Option I, therefore only grid power plants are included in the calculation. Option I corresponds to the calculation procedure contained in earlier versions of the "Tool to calculate the emission factor for an electricity system".

3. Select a method to determine the operating margin (OM).

The Operating Margin refers to the current energy generation mix installed in Mexico. The total fuel consumption for generation is divided into the different types of power plants, in order to determine the weighted average of the actual CO_2 emissions in Mexico.

For its calculations, the simple OM method has been selected from the four options options proposed in the *"Tool to calculate the emission factor for an electricity system ver. 02.2.1"*. Dispatch data analysis would be more accurate and therefore preferable, but this method cannot be applied for this project due to the lack of available published data. To be able to use the Dispatch data analysis method, the hourly generation-weighted average emissions per electricity unit (tCO_2/MWh) of a set of plants in the top 10% of the grid system dispatch order is needed. For confidentiality reasons, hourly-based dispatch order generation is not publicly available, so this method cannot be used for calculating the Operating Margin emission factor.

The reason for selecting the simple OM method over the other two methods (simple adjusted OM or Average OM) is that the low-cost/must-run resources in Mexico are well below 50% of total grid generation in both the average of the five most recent years and in the long-term normal for hydroelectricity production.

	2004	2005	2006	2007	2008
Hydro	12.02%	12.61%	13.46%	11.63%	16.49%
CC	34.64%	33.51%	40.46%	44.15%	45.72%
Diesel	1.33%	0.62%	0.68%	1.15%	1.19%
Internal	0.29%	0.36%	0.38%	0.49%	0.52%
Wind	0.00%	0.00%	0.02%	0.11%	0.11%
Fuel-Oil	31.79%	29.72%	23.07%	21.28%	18.37%
Geo	3.15%	3.33%	2.97%	3.18%	2.99%
Coal	8.57%	8.39%	7.97%	7.78%	7.54%
Dual	3.79%	6.52%	6.16%	5.75%	2.92%
Nuclear	4.41%	4.93%	4.83%	4.48%	4.16%
Low-cost/must run %	19.58%	20.88%	21.28%	19.40%	23.74%

Table 12. Source: SENER. "Prospectiva del sector eléctrico 2009-2024. Chart 21. p. 110"

The average low-cost/must-run generation resource in the last five years is 20.98%, well below the 50% threshold defined by the baseline methodology. Coal is not included under the low-cost/must-run category, because the Mexican coal-fired power plants cannot be considered must-run plants (for example, the largest coal-fired plant, Carbón II in Nava, in 2008 produced with a plant load factor of 71.5% - this being clearly below what a must-run plant would achieve). Therefore the Simple OM method can be used to calculate the baseline emissions.

In addition, data for calculating the emission factor using the simple OM method are very robust and reliable. In accordance with the approved methodology chosen, the simple OM method has been finally chosen to determine the relevant operating margin.

For the simple OM, the simple adjusted OM and the average OM, the emissions factor can be calculated using either of the two following data vintages:

- *Ex ante* option: If the ex ante option is chosen, the emission factor is determined once at the validation stage, thus no monitoring and recalculation of the emissions factor during the crediting period is required. For grid power plants, use a 3-year generation-weighted average, based on the most recent data available at the time of submission of the CDM-PDD to the DOE for validation. For off-grid power plants, use a single calendar year within the 5 most recent calendar years prior to the time of submission of the CDM-PDD for validation.

- *Ex post* option: If the ex post option is chosen, the emission factor is determined for the year in which the project activity displaces grid electricity, requiring the emissions factor to be updated annually during monitoring. If the data required to calculate the emission factor for year y is usually only available later than six months after the end of year y, alternatively the emission factor of the previous year y-1 may be used. If the data is usually only available 18 months after the end of year y, the emission factor of the year proceeding the previous year y-2 may be used. The same data vintage (y, y-1 or y-2) should be used throughout all crediting periods.

We have chosen the first option because the yearly statistics provided by SENER that are necessary to calculate the OM *ex-post* are published normally at the end of the year after the end of the reporting year, leading to large delays between emission reduction on one hand and monitoring, verification and issuance of CERs on the other. Another reason to choose this option is that *ex-ante* monitoring is simpler for the project development and also for the emission reduction verification.

4. Calculate the operating margin emission factor according to the selected method.

For calculating the Simple OM, the generation-weights average emission per electricity unit (tCO_2/MWh) of all generating sources serving the system excluding the low-cost/must-run generation units is used. It may be calculated:

- Option A: Based on the net electricity generation and a CO2 emission factor of each power unit; or
- Option B: Based on the total net electricity generation of all power plants serving the system and the fuel types and total fuel consumption of the project electricity system.

Option B can only be used if:

a) The necessary data for Option A is not available; and
b) Only nuclear and renewable power generation are considered as low-cost/must-run power sources and the quantity of electricity supplied to the grid by these sources is known; and
c) Off-grid power plants are not included in the calculation (i.e., if Option I has been chosen in Step 2).

Option B is used because total net electricity generation of all power plants serving the system as well as the fuel types and total fuel consumption of the project electricity system are available. Information needed for the Option A is not available.

$$EF_{grid,OM,simple,y} = \frac{\sum_i FC_{i,y} \cdot NCV_{i,y} \cdot EF_{CO2,i,y}}{EG_y} \quad \textbf{(4)}$$

Where:

$EF_{grid,OM,simple,y}$	Simple operating margin CO_2 emission factor in year *y* (tCO_2/MWh).
$FC_{i,y}$	Amount of fossil fuel type *i* consumed in the project electricity system in year *y* (mass or volume unit).
$NCV_{i,y}$	Net calorific value (energy content) of fossil fuel type *i* in year *y* (GJ/mass or volume unit).
$EF_{CO2,i,y}$	CO2 emission factor of fossil fuel type *i* in year *y* (tCO2/GJ).

EG_y	Net electricity generated and delivered to the grid by all power sources serving the system, not including low-cost / must-run power plants / units, in year *y* (MWh).
i	All fossil fuel types combusted in power sources in the project electricity system in year *y*.
y	The relevant year as per the data vintage chosen in Step 3.

$EF_{CO2,i,y}$ (in tC/TJ) can be found in the Reviewed 2006 IPCC Guidelines for Greenhouse Gas Inventories: Workbook. Data for $FC_{i,m,y}$ can be found in TJ/day in the three Prospective Reports (*Prospectivas)* so total annual consumption per fuel source can be calculated multiplying by 365.

5. Calculate the build margin (BM) emission factor.

This sample for power plants can be chosen from the two options proposed under the methodology. We have chosen Option 1: Calculate the Build Margin emission factor $EF_{grid,BM,y}$ ex-ante based on the most recent information available on plants already built for sample group *m* at the time of PDD submission.

The sample group of power units *m* used to calculate the Build Margin is determined as follows:

a) The annual electricity generation of the set of five power units ($AEG_{SET\text{-}5\text{-}units}$) that started to supply electricity to the grid most recently ($SET_{5\text{-}units}$) is 2,150,000 MWh.
b) The annual electricity generation of the set of power units ($AEG_{SET\geq 20\%}$) that comprise 20% ($SET_{\geq 20\%}$) of the annual electricity generation of the project electricity system (AEG_{total}) is 46,045,451 MWh.
c) The set of power units that comprises the larger annual electricity generation (SET_{sample}) is $SET_{\geq 20\%}$.
d) None of the power units in SET_{sample} started to supply electricity to the grid more than 10 years ago, then SET_{sample} is used to calculate the Build Margin.

$$EF_{grid,BM,y} = \frac{\sum_m EG_{m,y} \cdot EF_{EL,m,y}}{\sum_m EG_{m,y}} \qquad \textbf{(5)}$$

Where:

$EF_{grid,\,BM,\,y}$	Build margin CO2 emission factor in year y (tCO2/MWh)
$EG_{m,\,y}$	Net quantity of electricity generated and delivered to the grid by power unit m in year y (GWh)
$EF_{EL,\,m,\,y}$	CO2 emission factor of power unit m in year y (tCO2/MWh)
m	Power units included in the build margin
y	Most recent historical year for which power generation data is available

6. Calculate the combined margin (CM) emissions factor.

The combined margin emissions factor is calculated as follows:

$$EF_{grid,CM,y} = EF_{grid,OM,y} \times w_{OM} + EF_{grid,BM,y} \times w_{BM} \qquad \textbf{(6)}$$

Where:

$EF_{grid,OM,y}$	Operating margin CO2 emission factor in year y (tCO2/MWh).

$EF_{grid,BM,y}$ Build margin CO2 emission factor in year y (tCO2/MWh).
w_{OM} Weighting of operating margin emissions factor (%).
w_{BM} Weighting of build margin emissions factor (%).

For wind and solar projects, the default weights are as follows: W_{OM} = 0.75 and W_{BM} = 0.25 (due to their intermittent and non-dispatchable nature of the resources).

For the calculation of these two terms (BM and OM), the information used can be found in the *Prospectiva del Sector Eléctrico 2009-2024; 2008-2017; 2007-2016*, prepared by the *Secretaría de energía*. These documents can be accessed at http://www.sener.gob.mx/portal/publicaciones.html

Project emissions

The project emissions are calculated as follows

$$PE_y = PE_{FF,y} + PE_{GP,y} + PE_{HP,y} \quad (7)$$

Where:
PE_y Project emissions in year *y* (tCO2e/yr)
$PE_{FF,y}$ Project emissions from fossil fuel consumption in year *y* (tCO2/yr)
$PE_{GP,y}$ Project emissions from the operation of geothermal power plants due to the release of non-condensable gases in year *y* (tCO2e/yr)
$PE_{HP,y}$ Project emissions from water reservoirs of hydro power plants in year *y* (tCO2e/yr)

For the project activity, PE_y = 0 because there is no has fossil fuel consumption.

Leakage

According to the methodology ACM0002 v.12.1.0 no leakage emissions are considered.

B.6.2. Data and parameters that are available at validation:

(Copy this table for each data and parameter)

Data / Parameter:	**$EF_{grid,CM,y}$**
Data unit:	tCO_2/MWh
Description:	Combined margin CO2 emission factor for grid connected power generation in year *y* calculated using the "Tool to calculate the emission factor for an electricity system" (Ex-ante)
Source of data used:	Revised 2006 IPCC, CFE and SENER: *"Prospectiva del Sector Eléctrico 2009-2024"*, *"Prospectiva del Sector Eléctrico 2008-2017"* and *"Prospectiva del Sector Eléctrico 2007-2016"*.
Value Applied:	**0.5805 tCO_2/MWh**
Justification of the choice of data or description of measurement methods and procedures actually applied:	We have chosen to calculate the emission factor ex-ante because it is simpler for the project development. The value was calculated as per the "*Tool to calculate the emission factor for an electricity system*" , the calculation data is provided in Annex 3

Any comment:	-

Data / Parameter:	**$FC_{i,y}$**
Data unit:	TJ
Description:	Amount of fossil fuel type *i* consumed by power plant in year *y*
Source of data used:	SENER: *"Prospectiva del Sector Eléctrico 2009-2024"*, *"Prospectiva del Sector Eléctrico 2008-2017"* and *"Prospectiva del Sector Eléctrico 2007-2016"*.
Value Applied:	Values provided in Annex 3
Justification of the choice of data or description of measurement methods and procedures actually applied:	As per *Tool to calculate the emission factor for an electricity system* once for each crediting period using the most recent three historical years for which data is available at the time of submission of the CDM-PDD to the DOE for validation (ex ante option).
Any comment:	In 2008 only fuel consumption is provided in other units (m3 and Ton) and converted into TJ using NCVs and Density information below. Calculations provided in Annex 3.

Data / Parameter:	**$NCV_{i,y}$**
Data unit:	GJ/mass or volume unit
Description:	Net calorific value (energy content) of fossil fuel type *i* in year *y*
Source of data used:	SENER, México, National Commission for Energy Efficiency.[5]
Value Applied:	

Fuel Oil	40,122	kJ/kg
Natural Gas	34,353	kJ/m3
Diesel	41,868	kJ/kg
Coal	0.024	TJ/Ton

Justification of the choice of data or description of measurement methods and procedures actually applied:	Local net calorific values per fuel type are used. Once for each crediting period using the most recent three historical years for which data is available at the time of submission of the CDM-PDD to the DOE for validation (ex ante option).
Any comment:	The data of NCVi,y is used for 2008 only, for other years the data for fossil fuel consumed by power plant in year *y* is reported in TJ

Data / Parameter:	**Density**
Data unit:	Kg/m3
Description:	Density of fossil fuel type *i* in year *y*
Source of data used:	SENER, México, National Commission for Energy Efficiency[6]

[5] http://www.conae.gob.mx/wb/CONAE/CONA_694_a2_tablas_y_figura?page=2

Value Applied:	Fuel oil: 982 kg/m3 Diesel: 865 kg/m3
Justification of the choice of data or description of measurement methods and procedures actually applied:	The data is used for 2008 only, for other years the data for fossil fuel consumed by power plant in year *y* is reported in TJ
Any comment:	The data is used for 2008 only, for other years the data for fossil fuel consumed by power plant in year *y* is reported in TJ

Data / Parameter:	$EF_{CO2,i,y}$
Data unit:	tCO_2/TJ
Description:	CO2 emission factor of fossil fuel type *i* in year *y*
Source of data used:	Revised 2006 IPCC
Value Applied:	Fuel Oil: 75.5 tCO_2/TJ Natural Gas: 54.3 tCO_2/TJ Diesel: 72.6 tCO_2/TJ Coal: 87.3 tCO_2/TJ
Justification of the choice of data or description of measurement methods and procedures actually applied:	As per *Tool to calculate the emission factor for an electricity system,* once for each crediting period using the most recent three historical years for which data is available at the time of submission of the CDM-PDD to the DOE for validation (ex ante option).
Any comment:	-

Data / Parameter:	EG_y
Data unit:	MWh
Description:	Net electricity generated by the project electricity system in year *y*
Source of data used:	SENER: *"Prospectiva del Sector Eléctrico 2009-2024"*, *"Prospectiva del Sector Eléctrico 2008-2017"* and *"Prospectiva del Sector Eléctrico 2007-2016"*.
Value Applied:	Year 2006: 205,878,000 MWh Year 2007: 211,454,000 MWh Year 2008: 215,276,000 MWh
Justification of the choice of data or description of measurement methods and procedures actually	As per *Tool to calculate the emission factor for an electricity system*. Once for each crediting period using the most recent three historical years for which data is available at the time of submission of the CDM-PDD to the DOE for validation (ex ante option).

[6] http://www.conae.gob.mx/wb/CONAE/CONA_694_a2_tablas_y_figura?page=2

applied:	
Any comment:	-

Data / Parameter:	**$EG_{m,y}$**
Data unit:	MWh
Description:	Net electricity generated by power plant *m* in year *y*
Source of data used:	SENER: *"Prospectiva del Sector Eléctrico 2009-2024"*.
Value Applied:	Values provided in Annex 3
Justification of the choice of data or description of measurement methods and procedures actually applied:	BM: Ex ante, following the guidance in Step 5 of the *Tool to calculate the emission factor for an electricity system*.
Any comment:	-

B.6.3. Ex-ante calculation of emission reductions:

>>

Using the "Tool to calculate the emission factor for an electricity system", we take data of the specific energy consumption by fuel type directly calculated by SENER in *Prospectiva del sector eléctrico 2009-2024; Prospectiva del sector eléctrico 2008-2017 and Prospectiva del sector eléctrico 2007-2016*. The emission coefficient factor by fuel type is determined in tCO_2/TJ instead of tCO_2/mass or volume.

- The Operating Margin emission factor calculation for 2006 is 0.6714 tCO_2/MWh (see details in Annex 3)
- The Operating Margin emission factor calculation for 2007 is 0.6443 tCO_2/MWh (see details in Annex 3)
- The Operating Margin emission factor calculation for 2008 is 0.6306 tCO_2/MWh (see details in Annex 3)

The 3-year weighted average Operating Margin is 0.6487 tCO_2/MWh (see details in Annex 3)

The Build Margin is calculated based on yearly statistics provided by the Mexican Energy Ministry SENER (*Prospectiva del Sector Eléctrico 2009 – 2024, Prospectiva del Sector Eléctrico 2008 – 2017, Prospectiva del Sector Eléctrico 2007 – 2016*, available at http://www.sener.gob.mx/portal/publicaciones.html). These statistics provide data on newly built plants (name, capacity, type of plant, location) as well as production data (total capacity, type of fuel used, plant load factor) for the most recent year.

Methodology:

Since the source used does not provide public information on the exact date when new plants went online for every year the following approach was taken:

Definitions:

y : is the most recent year for which statistics on electricity production at plant level are available.

Calculation:

a) Order all the plants that were most recently commissioned according to the following criteria:

1. year of commissioning, starting with the most recent year,
2. plants with same year of commissioning by carbon intensity (emission factor per unit of electricity produced), starting with the lowest carbon intensity,
3. Plants with same year of commissioning and same carbon intensity by electricity generation in year y.

Plant 1 is therefore the plant with the lowest emission factor that was commissioned in the last year in which new plants were commissioned.

b) Calculate the contribution of each technology to the total generation in year *y*. Add the fraction from technology 1 following the order defined in a) until the cumulative fraction reaches 20% for the first time. The plants included in this group define the sample to be analyzed.

c) Calculate the average emission factor of the sample, weighted with the generation in year y. The result of this approach applied to the situation in Mexico with most recent data (production in 2007) is shown in Table 14 (See details in Annex 3).

Excluded from the analysis are all power plants for which no plant specific data is available in the official statistics and the spatial extent is limited to the project electricity system.

The following plants have been used to calculate the BM:

Plant Name	Technology	Capacity (MW)
Additions 2008		
Humeros	Geo	5
Ciudad del Carmen	GT	16
Ciudad del Carmen	GT	17
Additions 2007		
El Cajón	Hydro	375
El Cajón	Hydro	375
Tamazuchale	CC	1135
Río Bravo	CC	33
Río Bravo	CC	33
Río Bravo	CC	145.1
Ecatepec	GT	32
Remedios	GT	32
Victoria	GT	32
Villa de Flores	GT	32
Cuautitlan	GT	32
Coyotepec	GT	32
Coyotepec	GT	32

Vallejo	GT	32
Holbox	IC	0.8
Holbox	IC	0.8
Additions 2006		
Tuxpan V (PIE)	CC	495
Valladolid III (PIE)	CC	525
Altamira V (PIE)	CC	1121
Chihuahua II (El Encino)	CC	65.3
Atenco	GT	32.0
Additions 2005		
Ixtaczoquitlán	Hydro	1.6
Botello	Hydro	9
Hermosillo	CC	93.3
Rio Bravo IV	CC	500
La Laguna II	CC	498
Yécora	IC	0.7
Hol Box	IC	0.8
Additions 2004		
Rio Bravo III (PIE)	CC	495
El Sauz	CC	128
Tuxpan (Pdte. Adolfo López Mateos)	GT	163
San Lorenzo Potencia	GT	266
Chicoasén (Manuel Moreno Torres)	Hydro	900

Table 13. New power plants installed. Source: SENER. "*Prospectiva del sector eléctrico 2009-2024 Chart 18 p.96; Prospectiva del sector eléctrico 2008-2017 Chart 19 p.101; Prospectiva del sector eléctrico 2007-2016 Chart 19 p.77; Prospectiva del sector eléctrico 2006-2015 Chart 13 p.57 and Prospectiva del sector eléctrico 2005-2014 Chart 14 p.51.* Abbreviations: Hydro: Hydropower plant; Geo: Geothermal plant, CC: Combined cycle plant, fuelled with natural gas, GT: Gas turbine, fuelled with natural gas. IC: Internal combustion.

The technical data of typical power plants are given in the source as follows:

	Capacity (MW)	Efficiency (%)
Gas turbine	1 x 41.9	37.11
	1 x 102.7	**39.42**
	1 x 84.4	29.44
	1 x 189.6	33.62
	1 x 266.3	35.24
	1 x 39.4	36.40
Internal Combustion	**1 x 42.2**	**45.07**
	2 x 18.4	44.18
	3 x 3.6	37.82
Combined Cycle	1 x 281.9	50.27
	1 x 566.5	50.47
	1 x 786.7	50.60
	1 x 400.0	51.47
	1 x 799.8	**51.66**

Table 14. Technical data of typical fossil power plants of the types installed in the last years. Best-in-class values are highlighted. Source: SENER. "Prospectiva del sector eléctrico 2009-2024 Chart 47 p.159"

The BM factor is calculated as he average emission factor for the power plants capacity additions in the electricity system that comprises 20% of the system generation (MWh) and that have been built most recently.

Total annual generation for the power plants in 2008: 215,276,000 MWh.

Using a conservative approach, the most efficient example (lowest emission factor) of the respective technology will be taken for all new power plants installed. Therefore, for combined cycle plants an efficiency of 51.66% will be used, 39.42% for gas turbines and 45.07% for internal combustion power plants. In those cases where the statistics show a combination of gas turbine and combined cycle, a combined cycle is assumed (for details on the calculation see Annex 3).

From all these calculations, the BM factor used is:

BM factor: **0.3759** tCO_2/MWh (See details in Annex 3)

Calculate the baseline emission factor EF

The baseline emission factor is calculated as the weighted average of the Operating Margin emission factor and the Building Margin emission factor. For wind and solar projects, the default weights are as follows: W_{OM} = 0.75 and W_{BM} = 0.25 (owing to their intermittent and non-dispatchable nature).

Thus, the *ex-ante* baseline emission factor will be: 0.75*0.6487 + 0.25* 0.3759 = **0.5805** tCO_2/MWh

This baseline emission factor is the same emission factors for all the years in the crediting period.

Emission Reductions:

The emission reduction by the project activity is the difference between the baseline emissions, project emissions and emissions due to leakage. Since there are no project emission and no emission due to leakage, the emission reductions will be the baseline emission. This baseline emission is the baseline emission factor multiplied by the energy generation.

Baseline emission factor: **0.5805** tCO_2/MWh
Annual generation (once the 102 MW are operating): 422,076 MWh
Baseline Emissions: 245,015 tCO_2/year

B.6.4 Summary of the ex-ante estimation of emission reductions:

>>
Total emission reduction during the crediting period: 2,450,150 tCO_2 (See Annex 3)

Estimation of emission reductions:

Year	Estimation of project activity emissions (tonnes of CO_2 e)	Estimation of baseline emissions (tonnes of CO_2 e)	Estimation of leakage (tonnes of CO_2 e)	Estimation of overall emission reductions (tonnes of CO_2 e)

2012	0	154,393	0	154,393
2013	0	245,015	0	245,015
2014	0	245,015	0	245,015
2015	0	245,015	0	245,015
2016	0	245,015	0	245,015
2017	0	245,015	0	245,015
2018	0	245,015	0	245,015
2019	0	245,015	0	245,015
2020	0	245,015	0	245,015
2021	0	245,015	0	245,015
2022	0	90,622	0	90,622
Total (tonnes of CO2 e)	**0**	**2,450,150**	**0**	**2,450,150**

Table 15. Ex-ante estimation emission reductions.

The registration of the project will take place before its commissioning, so there will be no emission reductions prior to its registration.

B.7. Application of the monitoring methodology and description of the monitoring plan:

B.7.1 Data and parameters monitored:

Data / Parameter:	**$EG_{facility,y}$**
Data unit:	MWh/yr
Description:	Quantity of net electricity generation supplied by the project plant to the grid in year y
Source of data to be used:	Measured according to the calculation based on the $EG_{output,y}$ $EG_{import,y}$ $EG_{project,y}$ and $EG_{another,y}$ as the formula below.
Value of data applied for the purpose of calculating expected emission reductions in section B.5	422,076 MWh
Description of measurement methods and procedures to be applied:	Net electricity supplied by the project activity to the grid. Continuous measurement and at least monthly recording. The metering equipment complies with CFE regulations and will be properly calibrated by CFE.Calculated from energy exported by the project to the grid and energy imported by the project from the grid, directly obtained from the metering equipment installed in the Ixtepec substation. Oaxaca IV Wind Farm will have two meters (1 main and 1 backup) at the exit of the wind farm and two meters (1 main, 1 backup) in Ixtepec Substation. The project activity shares the transmission line to Ixtepec Substation with another wind project. The energy production from the project activity is being determined by CFE by means of CFE certified meters located in the Ixtepec Substation. The metering will be cross-check with the invoice of sales. The net electricity generation will be measured in the meter installed in the

	delivery point of energy. As was mention before this project activity will share the transmission line with other project; for this reason the meter in the substation will use a software that calculates the net electricity exported to the grid by the project activity. $$EGfacility,y = \left(\frac{\text{EG project, y}}{EG\ project,y + EG\ another,y} * EG\ output,y\right) - EG\ import,y$$ $EG_{output,y}$ $EG_{import,y}$ $EG_{project,y}$ and $EG_{another,y}$ will be measured directly by electricity meters (please refer to the B.7.2. for measurement breakdown).
QA/QC procedures to be applied:	The metering equipment in Ixtepec Substation and Oaxacas IV Substation will be properly calibrated and checked annually for accuracy, as per Mexican law and/or PPA, to ensure that any error resulting from such equipment shall not exceed +/- 0.2% of full-scale rating. To guarantee QA/QC, it will be double checked by receipts of electricity sales.
Any comment:	The data will be archived electronically. Archived data will be kept during the crediting period and two years later.

Data / Parameter:	**$EG_{output,y}$**
Data unit:	MWh
Description:	Electricity supplied to the grid by the proposed project and 'another project B' during year y
Source of data to be used:	Measured by power meter M3 main meter (maestro fiscal principal) o M3 backup meter (maestro fiscal respaldo)
Value of data applied for the purpose of calculating expected emission reductions in section B.5	422,076 MWh/year
Description of measurement methods and procedures to be applied:	Continuous measurement and at least monthly recording. The metering equipment complies with CFE regulations and will be properly calibrated by CFE. Directly obtained from the metering equipment installed in the Ixtepec substation.
QA/QC procedures to be applied:	The metering equipment in Ixtepec Substation will be properly calibrated and checked annually for accuracy, as per Mexican law and/or PPA, to ensure that any error resulting from such equipment shall not exceed +/- 0.2% of full-scale rating. Receipts for electricity sales will be kept for further verification, when necessary.
Any comment:	The data will be archived electronically. Archived data will be kept during the crediting period and two years later.

Data / Parameter:	**$EG_{import,y}$**
Data unit:	MWh
Description:	Electricity purchased from the grid by the proposed project and 'another project

	B' during year y
Source of data to be used:	Measured by power meter M3 main meter (maestro fiscal principal) o M3 backup meter (maestro fiscal respaldo)
Value of data applied for the purpose of calculating expected emission reductions in section B.5	0 MWh/year
Description of measurement methods and procedures to be applied:	Continuous measurement and at least monthly recording. The metering equipment complies with CFE regulations and will be properly calibrated by CFE. Directly obtained from the metering equipment installed in the Ixtepec substation.
QA/QC procedures to be applied:	The metering equipment in Ixtepec Substation will be properly calibrated and checked annually for accuracy, as per Mexican law and/or PPA, to ensure that any error resulting from such equipment shall not exceed +/- 0.2% of full-scale rating. Receipts for electricity sales will be kept for further verification, when necessary.
Any comment:	The data will be archived electronically. Archived data will be kept during the crediting period and two years later.

Data / Parameter:	**$EG_{project,y}$**
Data unit:	MWh
Description:	Electricity measured by meters installed at the project site Oaxaca IV substation
Source of data to be used:	Measured by power meter M2 main meter (principal) o M2 backup meter (respaldo)
Value of data applied for the purpose of calculating expected emission reductions in section B.5	422,076 MWh/year
Description of measurement methods and procedures to be applied:	Continuous measurement and at least monthly recording. The metering equipment complies with CFE regulations and will be properly calibrated by CFE. Directly obtained from the metering equipment installed in the Oaxaca IV substation.
QA/QC procedures to be applied:	The metering equipment in Oaxaca IV Substation will be properly calibrated and checked annually for accuracy, as per Mexican law and/or PPA, to ensure that any error resulting from such equipment shall not exceed +/- 0.2% of full-scale rating. Cross check measurement results with records for sold electricity.
Any comment:	The data will be archived electronically. Archived data will be kept during the crediting period and two years later.

Data / Parameter:	**$EG_{another,y}$**
Data unit:	MWh
Description:	Electricity measured by meters installed at 'another project B' project site substation

Source of data to be used:	Measured by power meter M1 main meter (principal) o M1 backup meter (respaldo)
Value of data applied for the purpose of calculating expected emission reductions in section B.5	0 MWh/year
Description of measurement methods and procedures to be applied:	Continuous measurement and at least monthly recording. The metering equipment complies with CFE regulations and will be properly calibrated by CFE. Directly obtained from the metering equipment installed in 'another project B' substation.
QA/QC procedures to be applied:	The metering equipment in 'another project B' Substation will be properly calibrated and checked annually for accuracy, as per Mexican law and/or PPA, to ensure that any error resulting from such equipment shall not exceed +/- 0.2% of full-scale rating. Cross check measurement results with records for sold electricity
Any comment:	The data will be archived electronically. Archived data will be kept during the crediting period and two years later.

B.7.2. Description of the monitoring plan:

>>

The project meets the applicability criteria under the monitoring methodology, ACM0002 v.12.1.0, "Consolidated methodology for grid-connected electricity generation from renewable sources" This methodology is applicable, among others, to projects that generate electricity using wind resources.

According to the applicable methodology, the data that should be monitored, archived electronically and kept at least for 2 years after the end of the crediting period is the quantity of net electricity generation supplied by the project plant to the grid in year y. This information, as described in section B.7.1, comes from Ixtepec substation power meter (main meter and its backup). These certified power meters are property of CFE (Comisión Federal de Electricidad, which is the state own electric utility company and responsible of the transmission system). Additionally, the Ixtepec substation power meters will perform continuous measurements and monthly records. Similarly, sales invoice cross-check will also be achieved..

The net electricity supplied to the grid by the proposed project is calculated as followed:

$$EGfacility,y = \left(\frac{\text{EG project, y}}{EG\ project,y + EG\ another,y} * EG\ output,y\right) - EG\ import,y$$

Where:

$EG_{facility,y}$ = Net electricity supplied by the proposed project in the year y.

$EG_{output,y}$ = Total electricity supplied to the grid by the proposed project and 'another project B' in the year y.

$EG_{import,y}$ = Total electricity imported from the grid by the proposed project and 'another project B' in the year y

$EG_{project,y}$ = Electricity measured by meters installed at the Oaxaca IV substation.
$EG_{another,y}$ = Electricity measured by meters installed at the 'other project B' substation that share transmission facilities with the proposed project.

Parameters $EG_{output,y}$, $EG_{import,y}$, $EG_{project,y}$ and $EG_{another,y}$ in the above formula which are used to calculate $EG_{facility,y}$ will be measured by electricity meters, as described above in Section B.7.1.

$EG_{output,y}$ and $EG_{import,y}$ will be measured by bidirectional meters M3 installed in the proposed project substation in Ixtepec.

$EG_{project,y}$ will be measured by electricity bidirectional meters M2 which will be installed at the Oaxaca IV substation.

$EG_{another,y}$ will be measured by electricity bidirectional meters M1 which will be installed at the 'another project B' substation.

$EG_{import,y}$ is the total electricity imported from the grid by the proposed project and 'another project B' in the year y, to be conservative, when the $EG_{facility,y}$ is calculated, $EG_{import,y}$ is fully deducted including the electricity imported form the grid by 'another project B'.

Meter interconnection

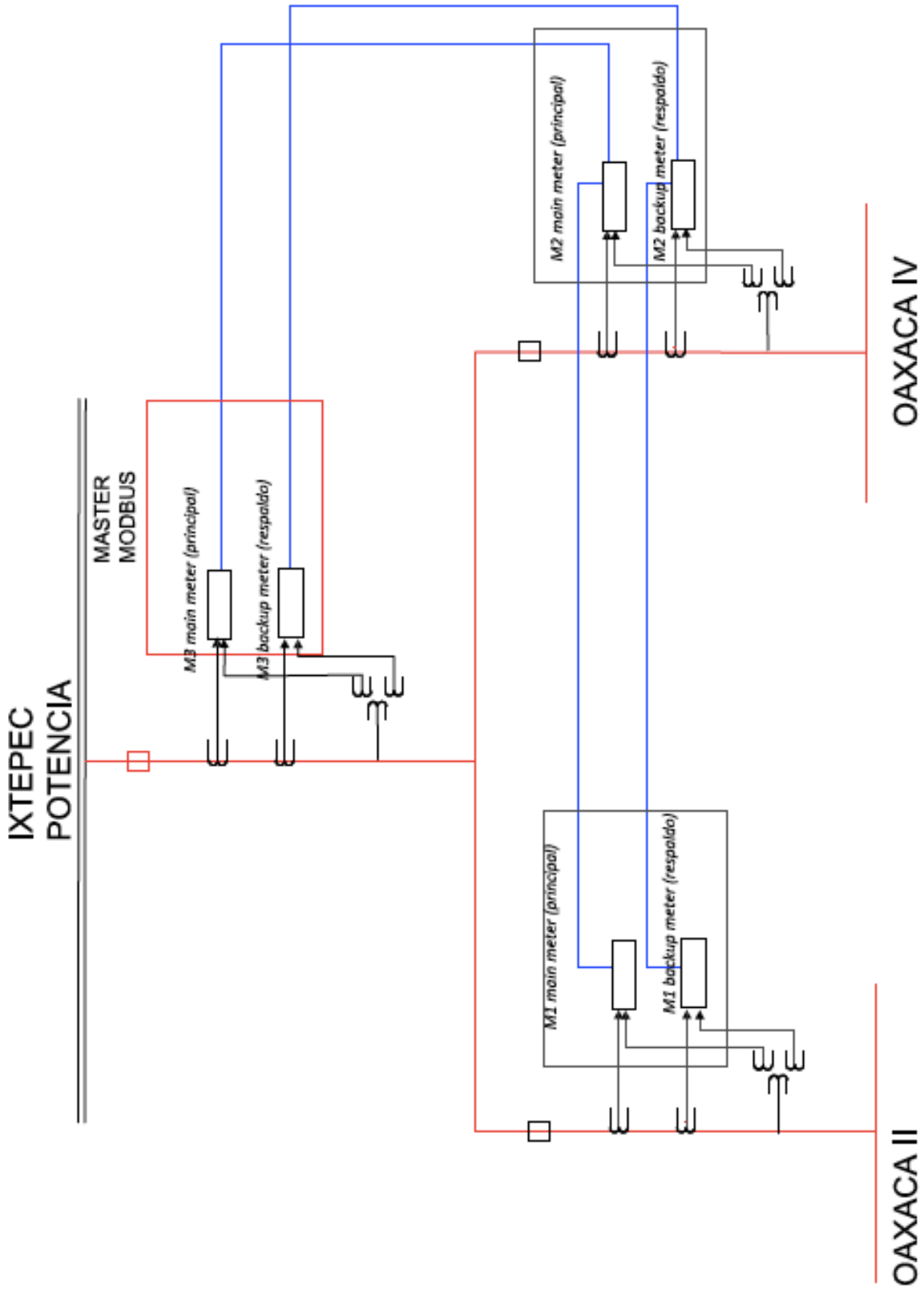

Figure 3. Meters interconnection[7].

In conclusion, the determination of $EG_{facility,y}$ is based on the measurement of electricity meters installed and is conservative.

For the emission reduction calculation, the following formula will be used:

Annual emission reduction = (Quantity of net electricity generation supplied by the project plant to the grid in year *y*) * (CO_2 emission factor (*Ex-ante*) of the estimated baseline)

More details about the monitoring plan can be found in the Annex 4.

The planned operational and management structure that will monitor emission reductions of the project will include:

- person(s) responsible for monitoring, recording, reporting and archiving measured data,
- person(s) responsible for checking data with sales receipts,
- person(s) responsible for performing the emission reduction calculations based on the methodology and preparing the Monitoring Report as appropriate,
- person(s) responsible of corrective and preventive actions,
- and a person responsible for overseeing the CDM process.

A detailed operational and management structure for monitoring of emission reductions of the project will be provided in the CDM Manual at a later stage, but before operation. All personnel involved in the monitoring will be trained.

B.8. Date of completion of the application of the baseline study and monitoring methodology and the name of the responsible person(s)/entity(ies):

>>
Date of completion: 01/10/2011

Alfonso Lanseros Valdés
Partner consultant
infocdm@co2-solutions.com
CO_2 Global Solutions International S.A.[8]
C/ Claudio Coello 76 Bajo C
28001 Madrid, Spain
Phone: (+34) 91 781 4148
Fax: (+34) 91 781 4149
www.co2-solutions.com

Nuria Iturriagagoitia Ripoll
Propuesta Asesores S.L.

[7] Oaxaca II project (another project B), is being validated by the same DOE in order to seek registration under UNFCCC.

[8] The emission factor of the Mexican Grid was calculated by CO2 Global Solutions International S.A.

Calle Berroa nº 2 oficina 607
31192 Tajonar (Navarra, Spain)
Phone: (+34) 948.150.249
Fax: (+34) 948.852.144
niturriagagoitia@propuestasesores.com

Those two entities are not listed as a Project Participant.

SECTION C. Duration of the project activity / crediting period

C.1. Duration of the project activity:

C.1.1. Starting date of the project activity:

>>
08/03/2010

The starting date of the project activity is when CE Oaxaca Cuatro S. de R.L. de C.V. won the CFE tender by the award of contract.

C.1.2. Expected operational lifetime of the project activity:

>>
The expected operational lifetime is 20 years 0 months.

C.2. Choice of the crediting period and related information:

C.2.1. Renewable crediting period:

C.2.1.1. Starting date of the first crediting period:

>>
N/A

C.2.1.2. Length of the first crediting period:

>>
N/A

C.2.2. Fixed crediting period:

C.2.2.1. Starting date:

>>
16/05/2012 or effective date of registration, whichever is later.

C.2.2.2. Length:

>>
The crediting period for the project activity is 10 years 0 months.

SECTION D. Environmental impacts

>>

D.1. Documentation on the analysis of the environmental impacts, including transboundary impacts:

>>

Oaxaca Cuatro S. de R.L. de C.V. elaborated the Environmental Impact Manifest of the project to reflect the environmental impact; this study was a requirement to obtain the resolution by SEMARNAT. In this document you can see the physical, social, biological and cultural impacts of the zone where the project will be carried out. The environmental resolution is registered as S.G.P.A./DGIRA.DG.6345.10.

The area where the project is implemented is natural, and has an extension of 576.61 hectares; however the wind farm only will need 17.8 hectares are used for construction, which means that the rest of the area could be conserved as free land.

After examining all documentation and analyzing the potential effects that could derive from the implementation of the Project, the Project is considered viable from an environmental point of view.

The Environmental Impact Manifest and the Environmental Resolution consider the different possible impacts in the different stages of the project:

- Erosion
- Soil contamination
- Noise emission
- Vegetation loss
- Possible effect on flora or fauna habitats

As the environmental resolution details, where an environmental impact is possible, it shall be minimized, mitigated or prevented via the measures and conditions proposed in the environmental resolution.

D.2. If environmental impacts are considered significant by the project participants or the host Party, please provide conclusions and all references to support documentation of an environmental impact assessment undertaken in accordance with the procedures as required by the host Party:

>>

After the corresponding legal revision, the project activity was approved by the SEMARNAT (resolution number S.G.P.A./DGIRA/DG.6345.10 dated September 21, 2010).

As per the conditions and constraints in its SEMARNAT resolution, Oaxaca Cuatro S. de R.L. de C.V. commits to complying with each and every one of the measures of mitigation, prevention and control proposed in the resolution as:

a) Study of monitoring for birds and bats.
b) Evaluation of noise levels.
c) Establish a program to compensate for the loss of forest vegetation.
d) Establish a program to manage residues.

SECTION E. Stakeholders' comments

>>

E.1. Brief description how comments by local stakeholders have been invited and compiled:

>>

National stakeholders consultation.

The Interministerial Commission on Climate Change (Mexican DNA) and the Mexican Energy Ministry (Secretaría de Energía, SENER) were interviewed on October 11, 2010. The aim of these visits was to know their opinion about the project activity. The consultation was made in the corresponding offices of each entity and the comments received during these meeting were registered.

Local stakeholders consultation.

Local government and community people were interviewed on October 20, 2010 to October 22, 2010 with the purpose of know their opinion about the project "Oaxaca IV Wind Farm". The consultation was made at the zone where the project activity will take place.

E.2. Summary of the comments received:

>>

National stakeholders consultation.

The opinion and suggestions from the Interministerial Commision on Climate Change (Mexican DNA), represented by the Director and Assistant Director, about the project activity are cited below:

- For the project approval from the DNA the two main factors to be considered are:
  - the project is developed by the promoter voluntarily and,
  - the project implies benefits for the sustainable development of the country.
- As the project already has the environmental approval, it means the project has already demonstrated its environment and the sustainable development benefits.
- The DNA is in pro of the development of wind farms because it is already demonstrated the social benefits implied.

The opinion and suggestions from the SENER, represented by the Research and Technology Development Director, about the project activity are cited below:

- The project counts with the support of the SENER because they have already included it in his portfolio of future projects and has been assigned through a governmental tender process.
- SENER understand the necessity of the CERs incentive for the development of projects as wind farms, so they includes this incentive into the financial analysis presented before the Mexican Treasury Department.
- SENER widely supports the development of renewable energy projects and tries to help the promoters in the project development process.

Local stakeholders consultation.

Some of the comments received of the local community are the following:

- The project is an opportunity to spread the importance of environmental care.
- In general, the people consider that the development of this kind of projects is important.
- They think that the project will improve the environment and it is a clean manner of generating energy.
- It is an opportunity to impulse environmental education programs for children in the region.

- They hope the project will bring benefits for their community, such as employment and community services.
- They want to generate economy activity for the community around the project.
- They want the developer to always have availability to offer information and answer questions about the project that the local community might have

E.3. Report on how due account was taken of any comments received:

>>

CE Oaxaca Cuatro S. de R.L. de C.V. has employees that are responsible of attending any question or comment of the people in the region at any moment.

No other mayor comments have been received from other stakeholders; the project benefits such as local employment will be brought to the zone as a natural consequence of the project implementation. CE Oaxaca Cuatro S. de R.L. de C.V. will act in accordance to the conditions listed in the environmental authorization in order to assure the environmental conservation and will carry out preventive and corrective actions for assure the conservation of flora and fauna according to the environmental permit.

Annex 1

CONTACT INFORMATION ON PARTICIPANTS IN THE PROJECT ACTIVITY

Organization:	CE Oaxaca Cuatro S. de R.L. de C.V.
Street/P.O.Box:	Paseo de Tamarindos No.90 Arcos Bosques Torre 1. Piso 30.
Building:	
City:	Mexico D.F.
State/Region:	
Postcode/ZIP:	05120
Country:	Mexico
Telephone:	+52 (55) 42 11 67 27
FAX:	+52 (55) 52 91 99 48
E-Mail:	javier.zarate.martin@acciona.com
URL:	
Represented by:	Javier Zárate Martín
Title:	Financial Director
Salutation:	Mr.
Last name:	Zárate Martín
Middle name:	
First name:	Javier
Department:	
Mobile:	
Direct FAX:	+52 (55) 52 91 99 48
Direct tel:	+52 (55) 42 11 67 27
Personal e-mail:	

Annex 2

INFORMATION REGARDING PUBLIC FUNDING

Annex 3

BASELINE INFORMATION

Total Fuel consumption:

2006: 1,608,555 TJ
2007: 1,652,355 TJ
2008: 1,587,036 TJ

	2006			
	Fuel share	Fuel consumption (TJ)	CO2 Emission Factors (kg/TJ)	Emission CO_2 (tCO_2)
Fuel Oil	32.00%	514,738	75,500	38,862,689
Natural Gas	47.00%	756,021	54,300	41,051,932
Diesel	1.00%	16,086	72,600	1,167,811
Coal	20.00%	321,711	87,300	28,085,370
Total	100%	1,608,555		109,167,802

Fuel consumption per fuel type. Source: *Prospectiva del sector eléctrico 2007-2016 Graph 40 p.116.*

	2007			
	Fuel share	Fuel consumption (TJ)	CO2 Emission Factors (kg/TJ)	Emission CO_2 (tCO_2)
Fuel Oil	28.90%	477,531	75,500	36,053,560
Natural Gas	52.00%	859,225	54,300	46,655,896
Diesel	0.50%	8,262	72,600	599,805
Coal	18.50%	305,686	87,300	26,686,359
Total	100%	1,652,355		109,995,620

Fuel consumption per fuel type. Source: *Prospectiva del sector eléctrico 2008-2017 Graph 39 p.148.*

	2008			
	Fuel share	Fuel consumption (TJ)	CO2 Emission Factors (kg/TJ)	Emission CO_2 (tCO_2)
Fuel Oil	26.28%	417,048	75,500	31,487,121
Natural Gas	56.81%	901,535	54,300	48,953,355
Diesel	0.58%	9,253	72,600	671,778
Coal	16.33%	259,200	87,300	22,628,160
Total	100%	1,587,036		103,740,414

Fuel consumption per fuel type. Source: *Prospectiva del sector eléctrico 2009-2024 Chart 35 p.144.*

	Fuel consumption 2008 (additional calculation detail)					
	Fuel consumption (m3)	Fuel consumption (ton)	Density (kg/m3)	NCVs		Fuel consumption (TJ)
Fuel Oil	10.585.000	-	982	40.122	kJ/kg	417.048
Natural Gas	26.243.500.000	-	-	34.353	kJ/m3	901.535
Diesel	255.500	-	865	41.868	kJ/kg	9.253
Coal		10.800.000	-	0,024	TJ/Ton	259.200
Total						1.587.036

Fuel consumption per fuel type. Source: *Prospectiva del sector eléctrico 2009-2024 Chart 38 p.144.*

Generation by sources:

	2006		2007		2008	
	Power share	Annual Generation (MWh)	Power share	Annual Generation (MWh)	Power share	Annual Generation (MWh)
Dual	6.16%	12,691,354	5.75%	12,161,569	2.92%	6,282,013
Combined cycle	40.46%	83,295,528	44.15%	93,359,025	45.72%	98,414,858
Gas turbine	0.68%	1,393,076	1.15%	2,424,130	1.19%	2,557,344
Coal	7.97%	16,401,345	7.78%	16,458,809	7.54%	16,235,759
Internal	0.38%	781,147	0.49%	1,035,666	0.52%	1,126,254
Nuclear	4.83%	9,939,045	4.48%	9,475,567	4.16%	8,947,967
Standard Thermoelectric	23.07%	47,500,879	21.28%	44,992,805	18.37%	39,542,092
Renewables (Hydro, Geo, Wind …)	16.45%	33,875,625	14.92%	31,546,429	19.59%	42,168,800
Total Generation		225,079,000		232,552,000		235,871,000
Self-consumption		19,201,000		21,098,000		20,595,000
Total	100%	205,878,000	100%	211,454,000	100%	215,276,000

Generation by sources. Source: SENER. "*Prospectiva del sector eléctrico 2009-2024 Chart 21 p.110.*

Total % under methodology

2006	2007	2008
21.28%	19.40%	23.74%

Total generation in baseline (MWh)		
2006	2007	2008
162,586,330	170,709,004	164,509,320

Imports (MWh)		
2006	2007	2008
523,000	277,000	351,000

Imports. Source: SENER. "*Prospectiva del sector eléctrico 2009-2024 Chart 21 p 110"*

Baseline calculations:

- Operating Margin:

Operating Margin = total CO_2 emission / (total generation under baseline + imports)

Operating Margin 2006= 109,167,802/ (162,063,330 + 523,000) = 0.6714 tCO_2/MWh
Operating Margin 2007= 109,995,620/ (170,432,004 + 277,000) = 0.6443 tCO_2/MWh
Operating Margin 2008= 103,740,414/ (164,158,320 + 351,000) = 0.6306 tCO_2/MWh

OM = (0.6714* (162,063,330 + 523,000) + 0.6443 * (170,432,004 + 277,000) + 0.6306 * (164,158,320 + 351,000)) / ((162,063,330 + 523,000) + (170,432,004 + 277,000) + (164,158,320 + 351,000)) = **0.6487 tCO_2/MWh**

- Build Margin:

Calculation of Build Margin:

Build Margin = (Net quantity of electricity generated and delivered to the grid by power unit *m* in year *y* (MWh) * CO2 emission factor of power unit *m* in year *y* (tCO2/MWh)) / Net quantity of electricity generated and delivered to the grid by power unit *m* in year *y* (MWh)

CO2 emission factor of power unit = 3.6 * Average CO2 emission factor of fuel type *i* used in power unit *m* in year *y* (tCO2/GJ) / Average net energy conversion efficiency of power unit *m* in year *y* (%)

Name	Capacity MW	Technology	Net Generation	Production Percentaje	Accumulate Percentaje	Emission Factor of power unit	CO2 Emissions
	MW		MWh	%	%	(tCO2/MWh)	(tCO2)
Additions 2008							
Humeros	5	GEO	321,000	0.15%	0.15%	0.000	0
Ciudad del Carmen	16	GT	0	0.00%	0.15%	0.496	0
Ciudad del Carmen	17	GT	0	0.00%	0.15%	0.496	0
Additions 2007							
El Cajón (Leonardo Rodríguez Alcaine)	375	HID	1,829,000	0.85%	1.00%	0.000	0
El Cajón (Leonardo Rodríguez Alcaine)	375	HID	0	0.00%	1.00%	0.000	0
Tamazunchale (PIE)	1135	CC	7,492,100	3.48%	4.48%	0.378	2,834,990
Río Bravo (Emilio Portes Gil)	33	CC	0	0.00%	4.48%	0.378	0
Río Bravo (Emilio Portes Gil)	33	CC	0	0.00%	4.48%	0.378	0
Río Bravo (Emilio Portes Gil)	145.1	CC	260,764	0.12%	4.60%	0.378	98,672
Ecatepec (LFC)	32	GT	0	0.00%	4.60%	0.496	0
Remedios (LFC)	32	GT	0	0.00%	4.60%	0.496	0
Victoria (LFC)	32	GT	0	0.00%	4.60%	0.496	0
Villa de Flores (LFC)	32	GT	0	0.00%	4.60%	0.496	0
Cuautitlán (LFC)	32	GT	0	0.00%	4.60%	0.496	0
Coyotepec (LFC)	32	GT	0	0.00%	4.60%	0.496	0
Coyotepec (LFC)	32	GT	0	0.00%	4.60%	0.496	0
Vallejo (LFC)	32	GT	0	0.00%	4.60%	0.496	0
Holbox	0.8	IC	0	0.00%	4.60%	0.580	0
Holbox	0.8	IC	0	0.00%	4.60%	0.580	0
Additions 2006							
Tuxpan V (PIE)	495	CC	3,689,616	1.71%	6.31%	0.378	1,396,140
Valladolid III (PIE)	525	CC	3,547,558	1.65%	7.96%	0.378	1,342,386
Altamira V (PIE)	1121	CC	7,877,408	3.66%	11.62%	0.378	2,980,789
Chihuahua II (El Encino)	65.3	CC	4,001,949	1.86%	13.48%	0.378	1,514,326
Atenco (LFC)	32.0	GT	0	0.00%	6.31%	0.496	0
Additions 2005							
Ixtaczoquitlán	1.6	HID	0	0.00%	13.48%	0.000	0

Botello	9	HID	0	0.00%	13.48%	0.000	0
Hermosillo	93.3	CC	1,895,404	0.88%	14.36%	0.378	717,216
Rio Bravo IV	500	CC	2,492,826	1.16%	15.52%	0.378	943,278
La Laguna II	498	CC	3,469,718	1.61%	17.13%	0.378	1,312,932
Yécora	0.7	IC	0	0.00%	17.13%	0.580	0
Hol Box	0.8	IC	0	0.00%	17.13%	0.580	0
Additions 2004							
Rio Bravo III (PIE)	495	CC	931,161	0.43%	17.56%	0.378	352,349
El Sauz	128	CC	2,285,577	1.06%	18.62%	0.378	864,856
Tuxpan (Pdte. Adolfo López Mateos)	163	GT	5,951,370	2.76%	21.39%	0.496	2,951,227
San Lorenzo Potencia	266	GT	0	0.00%	21.39%	0.496	0
Chicoasén (Manuel Moreno Torres)	900	HID	7,653,.000	3.55%	24.94%	0.000	0

New power plants installed. Source: SENER. "*Prospectiva del sector eléctrico 2009-2024 Chart 18 p.96; "Prospectiva del sector eléctrico 2008-2017 Chart 19 p.101; Prospectiva del sector eléctrico 2007-2016 Chart 19 p.77; Prospectiva del sector eléctrico 2006-2015 Chart 13 p.57; Prospectiva del sector eléctrico 2005-2014 Chart 14 p.51"*. Abbreviations: Hydro: Hydropower plant; Geo: Geothermal plant, CC: Combined cycle plant, fuelled with natural gas, GT: Gas turbine, fuelled with natural gas. IC: Internal combustion.

BM factor: **0.3759** tCO2/MWh

Emission factor ex-ante = 0.75*OM+ 0.25*BM = **0.5805** tCO_2/MWh

Annex 4

MONITORING INFORMATION

A. Measuring and cross-check procedure.

1. Measuring.

The person(s) responsible will obtain the electricity generation information from the meters installed in the Ixtepec substation on a monthly basis, and will report them in the spreadsheet designed for measurement control and will store the data electronically.

2. Calculation of energy generation to be monitored.

Oaxaca IV Wind Farm will have two CFE certified meters (1 main, 1 backup) in Ixtepec Substation, the meters in Ixtepec Substation are property of CFE

3. Cross-check of net electricity supplied to the grid with receipt of sales:

Net electricity supplied to the grid measured at the substation will be cross-checked with receipts of sales.

If there is a mismatch, the person(s) responsible will solve it with CFE, explaining the discrepancy detected, the origin of deviations and the corrective actions taken and file the evidence.

Emission reductions will be calculated with cross-checked net electricity supplied to the grid as per the formula:

$$BE_y = EG_{PJ,y} \cdot EF_{grid,CM,y}$$

B. Quality control (QC) procedures and quality assurance procedures (QA).

1. Monitoring equipment

   1.1. Monitoring equipment shall be set up as per Mexican law and/or PPA.
   1.2. Monitoring equipment shall be authorized through a certificated formal process.
   1.3. After set up monitoring equipment shall be calibrated by CFE periodically as determined by the Mexican Law and/or PPA and checked as necessary by CFE for accuracy.

2. Corrective and preventive actions will be followed and properly documented.

- - - - -