CLEAN DEVELOPMENT MECHANISM
PROJECT DESIGN DOCUMENT FORM (CDM-PDD)
Version 03 - in effect as of: 28 July 2006

CONTENTS

A. General description of project activity

B. Application of a baseline and monitoring methodology

C. Duration of the project activity / crediting period

D. Environmental impacts

E. Stakeholders' comments

Annexes

Annex 1: Contact information on participants in the project activity

Annex 2: Information regarding public funding

Annex 3: Baseline information

Annex 4: Monitoring plan

SECTION A. General description of project activity

A.1. Title of the project activity:

>>
Kaladonger wind power project in Rajasthan
Version 04
24/12/2012

A.2. Description of the project activity:

>>
Purpose

The project activity envisages implementation of a 75.6 MW wind power project consisting of 36 Wind Electric Generators (WTGs) of individual capacity 2.1 MW, at Kaladonger village in Rajasthan, India by M/s Bindu Vayu Urja Private Limited (BVUPL).

The electricity generated by the project will be exported to the NEWNE electricity grid. The project activity will therefore displace an equivalent amount of electricity which would have otherwise been generated by fossil fuel dominant electricity grid. The project proponent plans to avail CDM benefits for the project.

The project activity is in line with the sustainable development priorities of the country. The electricity generated from the wind farm will be exported to the NEWNE grid and sold to the state electricity utility, thereby marginally contributing to reducing the energy demand supply gap in the state of Rajasthan[1].

Technology
The project uses Suzlon's wind energy technology. The project activity implements S95 model 2100kW WTGs, specifications for which are provided in section A.4.3.

Emission Reductions from anthropogenic sources
The wind power generated from the project site will be displacing the electricity generated from thermal power stations feeding into NEWNE grid and will be replacing the usage of diesel generators for meeting the power demand during shortage periods. Since wind power is Green House Gas (GHG) emissions free, the power generated will prevent the anthropogenic green house gas (GHG) emissions generated by the fossil fuel based thermal power stations comprising coal, diesel, furnace oil and gas. The estimation of GHG reductions by this project is limited to carbon dioxide (CO_2) only. Thus the proposed project activity leads to an emission reduction of 126817 t CO_2e per year over the chosen crediting period of ten years.

In view of the project participants on the contribution of the project activity to sustainable development,

[1] http://www.cea.nic.in/reports/yearly/annual_rep/2009-10/ar_09_10.pdf

Ministry of Environment and Forests, Govt. of India has stipulated the following indicators for sustainable development in the interim approval guidelines for CDM projects:

A > Social well being –

- The proposed project activity contributes to alleviation of poverty in the region by establishing direct and indirect benefits through employment generation.
- The infrastructure in and around the project area has also improved due to project activity. This includes development of road network and improvement of electricity quality, frequency and availability as the electricity is fed into a deficit grid.
- The generated electricity will be fed into the NEWNE grid, thereby improving the grid frequency and availability of electricity to the local consumers (villagers & sub-urban habitants) which will provide new opportunities for industries and economic activities to be setup in the area, thereby resulting in greater local employment, ultimately leading to overall development.

B > Economic well being –

- The project will improve livelihood of people in the region by generating employment opportunities in the region
- The project creates business opportunities of the suppliers, financial institutions and other stakeholder who are directly or indirectly associated with the project.
- The project is a clean technology investment in the region, which would not have been taken place in the absence of the CDM benefits

C> Environmental well being -

- The project utilizes wind energy for generating electricity which otherwise would have been generated through alternate fossil fuel based power plants, contributing to reduction in specific emissions (emissions of pollutant/unit of energy generated) including GHG emissions.
- Being a renewable resource, using wind energy to generate electricity contributes to resource conservation. Thus, the project has no negative impact on the surrounding environment contributing to environmental well-being.

D >Technological well being -

- The project activity leads to the promotion of Wind Electric Generators (WTGs) in the region demonstrating the success of wind based renewable electricity which is fed into the nearest sub-station (part of the NEWNE Grid), thus increasing energy availability and improving quality of power under the service area of the substation. Hence the project leads to technological well being.

A.3. Project participants:

>>

Name of party involved	Private and/or Public entity project participants	Kindly indicate if the party involved wishes to be considered as project participant (Yes/No)
India (Host country)	M/s Bindu Vayu Urja Private Limited (BVUPL)	No

A.4. Technical description of the project activity:

A.4.1. Location of the project activity:

>>

A.4.1.1. Host Party (ies):

>>
India

A.4.1.2. Region/State/Province etc.:

>>
Rajasthan

A.4.1.3. City/Town/Community etc.:

>>
District: Jaisalmer
Site: Kaladonger

A.4.1.4. Details of physical location, including information allowing the unique identification of this project activity (maximum one page):

>>
The project activity is located at Kaladonger, Rajasthan State, India.

The geo-coordinates of location of the project activity are as follows:

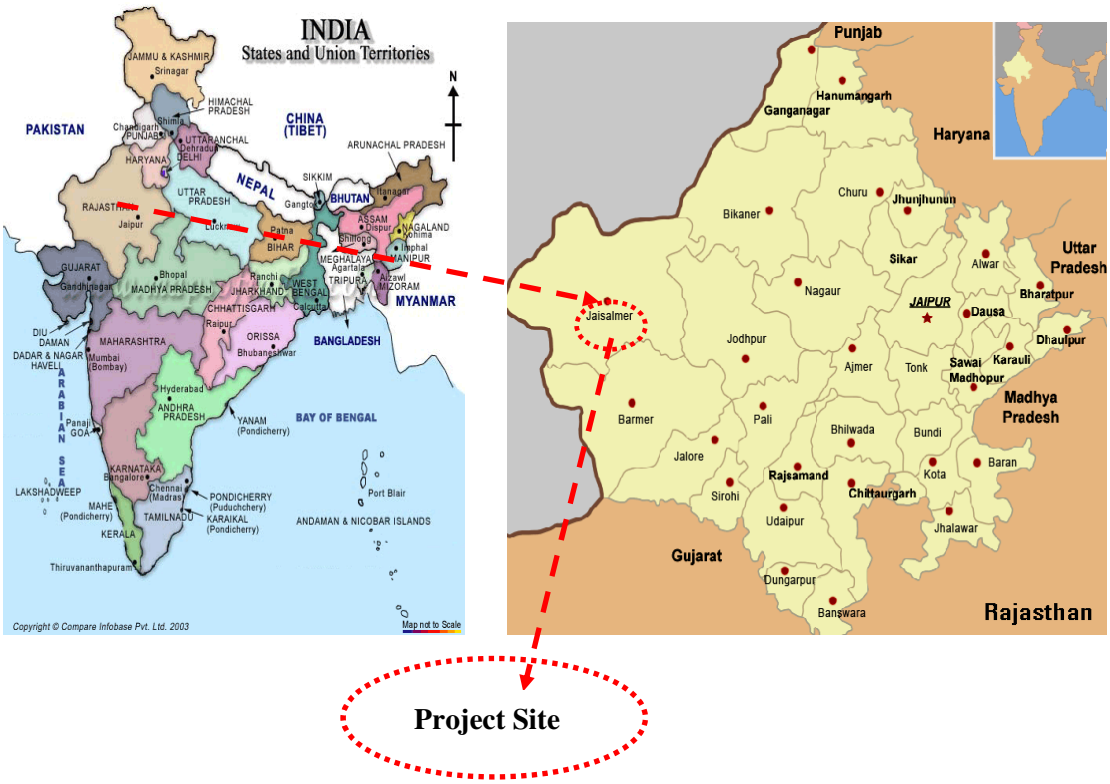

The geographical coordinates for the WTGs are mentioned below.

S.No.	Loc.No.	LATITUDE			LONGITUDE		
		Deg	Min	Sec	Deg	Min	Sec
1	KD-001	27	05	35.4	70	59	59.0
2	KD-002	27	05	54.9	70	59	53.5
3	KD-003	27	06	16.8	70	59	54.4
4	KD-004	27	06	27.3	70	59	42.5
5	KD-005	27	06	38.7	70	59	30.8
6	KD-006	27	06	49.8	70	59	18.6
7	KD-007	27	07	01.7	70	59	04.3
8	KD-012	27	07	26.1	70	59	48.0
9	KD-013	27	07	14.1	70	59	59.1
10	KD-014	27	07	01.8	71	00	09.9
11	KD-024	27	07	09.5	71	02	04.5
12	KD-027	27	07	36.3	71	01	28.8
13	KD-028	27	07	41.5	71	01	13.0
14	KD-029	27	07	51.5	71	00	54.8
15	KD-030	27	07	54.5	71	00	33.3
16	KD-035	27	08	40.9	71	00	46.3
17	KD-036	27	08	34.2	71	01	03.8
18	KD-037	27	08	27.5	71	01	23.9
19	KD-038	27	08	17.6	71	01	39.8
20	KD-039	27	08	10.4	71	01	56.5
21	KD-040	27	07	59.8	71	02	04.9
22	KD-042	27	07	44.8	71	02	35.6
23	KD-054	27	08	22.4	71	02	59.3
24	KD-055	27	08	30.7	71	02	49.9
25	KD-056	27	08	38.2	71	02	38.8
26	KD-057	27	08	45.1	71	02	26.5
27	KD-058	27	08	52.9	71	02	06.3
28	KD-059	27	09	02.5	71	01	51.7
29	KD-060	27	09	11.0	71	01	31.3
30	KD-061	27	09	17.0	71	01	17.4
31	KD-067	27	09	21.4	71	02	54.1
32	KD-068	27	09	14.6	71	03	09.3
33	KD-076	27	08	23.5	71	04	55.5
34	KD-077	27	08	39.3	71	04	47.2
35	KD-078	27	08	48.3	71	04	31.9
36	KD-079	27	09	02.9	71	04	29.8

A.4.2. Category (ies) of project activity:

>>

The project activity has a capacity more than 15 MW and is considered under "Grid-connected electricity generation from renewable sources". As per the scope of the project activities enlisted in the latest version of the "List of Sectoral Scopes and related approved baseline and monitoring methodologies", the project activity can be categorized in:

Scope Number – 1

Sectoral Scope – Energy Industries (Renewable/ Non renewable sources)

A.4.3. Technology to be employed by the project activity:

>>

Pre project scenario:

The project is a greenfield project. In absence of the project an equivalent amount of electricity would have been consumed from the NEWNE grid, which is connected to fossil fuel based power plants.

Technology employed in baseline scenario:

In the absence of the project activity, equivalent energy would be generated in power plants connected to the NEWNE Grid of India. Details on grid-connected power plants are given in the CEA CO2 baseline database (Version 7), based on which the combined margin emission factor is determined.

Technology employed in project scenario:

Power generation using wind is achieved by deploying 36 wind turbine generators (WTGs). Wind power generation is an environmentally safe and sound technology. The WTGs are supplied by Suzlon Energy Limited to the project participant. The components are manufactured in India and assembled at the project site. There is no transfer of technology from outside the host country for this project activity.

The project uses Suzlon's wind energy technology and implements 36 number of WTGs of S95 model with a capacity of 2100kW each. The technical details are shown below:

OPERATING DATA	
Rated power	2100 kw
Rotor speed	12.1 to 17.6 rpm
Power regulation	Active pitch regulated
Cut-in wind speed	3.5 metre/second
Rated wind speed	11 metre/second
Cut-off wind speed	25 metre/second
Restart wind speed	23 metre/second
Wind class	IEC IIA
Estimated service life	20 years
Ambient temperature range-operation	-10° to + 40°C
A factor	9.59 m/s
ROTOR DATA	
Diameter	95 metre
Rotor cone angle	5°

Rotor speed at rated power	15.83 rpm
Tip speed at rated power	78.7 m/s
Swept area	7085 metre^2
BLADES	
Type	SUZLON SB46
Length	46.3 m
Material	Glass fibre reinforced plastic / Epoxy
Type of aerodynamic brake	
GENERATOR	
Type	Asynchronous 3 phase induction generator with slip rings operated with rotor circuit inverter system.
Rated power	2.1 MW
Number of poles/Synchronous speed	4/1500 rpm
Frequency	50 Hz
Rated generator speed	1568 rpm
TOWER	
Type	Tubular steel tower
Tower Height	80m

The project activity doesn't involve any technology transfer. The baseline of the project activity is the emissions from electricity generation in fossil fuel power plants which would be displaced due to the project activity.

A.4.4. Estimated amount of emission reductions over the chosen crediting period:

>>

Years	Annual Estimation of Emission Reduction in tons of CO_2e
2013 – 14	126817
2014 – 15	126817
2015 – 16	126817
2016 – 17	126817
2017 – 18	126817
2018 – 19	126817
2019 – 20	126817
2020 – 21	126817
2021 – 22	126817
2022 – 23	126817
Total Emission Reduction (tonnes of CO_2e)	1268170

Total Number of Crediting Years	10
Annual Average of the estimated reductions over the crediting period (tonnes of CO_2e)	126817

A.4.5. Public funding of the project activity:

>>

No public funding from parties included in Annex – I is involved in the project activity. Hence there is no ODA (Official Development Assistance) is flowing to the project activity.

SECTION B. Application of a baseline and monitoring methodology

B.1. Title and reference of the approved baseline and monitoring methodology applied to the project activity:

>>

Title of the approved baseline and monitoring methodology: "Consolidated baseline methodology for grid-connected electricity generation from renewable sources".

Reference: ACM002, Version 12.3.0 (EB 66), Sectoral Scope: 1
The methodology has been referred from the list of approved methodologies for CDM project activities in the UNFCCC website
(http://cdm.unfccc.int/methodologies/DB/C505BVV9P8VSNNV3LTK1BP3OR24Y5L)

This methodology also draws upon Version 06.0.0 of the "Tool for demonstration and assessment of additionality"[2] and Version 02.2.1 of the "Tool to calculate the emission factor for an electricity system"[3].

B.2. Justification of the choice of the methodology and why it is applicable to the project activity:

>>

Applicability criteria	Applicability status
This methodology is applicable to grid-connected renewable power generation project activities that (a) install a new power plant at a site where no renewable power plant was operated prior to the implementation of the project activity (Greenfield plant); (b) involve a capacity addition; (c) involve a retrofit of (an) existing plant(s); or (d) involve a replacement of (an) existing plant(s).	The proposed project activity is a Greenfield, NEWNE grid-connected renewable power plant. Therefore, it confirms to the said criteria
The project activity is the installation, capacity addition, retrofit or replacement of a power plant/unit of one of the following types: hydro power plant/unit (either with a run-of-river reservoir or an accumulation reservoir), wind power plant/unit, geothermal power plant/unit, solar power plant/unit, wave power plant/unit or tidal power plant/unit	The project activity is the installation of a new grid connected renewable wind power project. Thus, it meets the first applicability condition
In the case of capacity additions, retrofits or replacements (except for wind, solar, wave or tidal power capacity	The proposed project activity is the installation of a new wind

[2] http://cdm.unfccc.int/methodologies/PAmethodologies/tools/am-tool-01-v6.0.0.pdf

[3] http://cdm.unfccc.int/methodologies/PAmethodologies/tools/am-tool-07-v2.2.1.pdf

addition projects which use Option 2: on page 11 to calculate the parameter $EG_{facility,y}$ *): the existing plant started commercial operation prior to the start of a minimum historical reference period of five years, used for the calculation of baseline emissions and defined in the baseline emission section, and no capacity expansion or retrofit of the plant has been undertaken between the start of this minimum historical reference period and the implementation of the project activity*	power plant/unit. Therefore, the said criteria is not applicable
In case of hydro power plants, one of the following conditions must apply: • *The project activity is implemented in an existing single or multiple reservoirs, with no change in the volume of any of reservoirs; or* • *The project activity is implemented in an existing single or multiple reservoirs, where the volume of any of reservoirs is increased and the power density of each reservoir, as per definitions given in the Project Emissions section, is greater than 4 W/m^2; or* • *The project activity results in new single or multiple reservoirs and the power density of each reservoir, as per definitions given in the Project Emissions section, is greater than 4 W/m^2.* *In case of hydro power plants using multiple reservoirs where the power density of any of the reservoirs is lower than 4 W/m2 all the following conditions must apply:* • *The power density calculated for the entire project activity using equation 5 is greater than 4W/m^2;* • *Multiple reservoirs and hydro power plants located at the same river and where are designed together to function as an integrated project1 that collectively constitute the generation capacity of the combined power plant;* • *Water flow between multiple reservoirs is not used by any other hydropower unit which is not a part of the project activity;* • *Total installed capacity of the power units, which are driven using water from the reservoirs with power density lower than 4 W/m^2, is lower than 15MW;* • *Total installed capacity of the power units, which are driven using water from reservoirs with power density lower than 4 W/m^2, is less than 10% of the total installed capacity of the project activity from multiple reservoirs.*	The proposed project activity is the installation of a wind power plant/unit. Therefore, the said criteria is not applicable
The methodology is not applicable to the following: • *Project activities that involve switching from fossil fuels to renewable energy sources at the site of the*	The proposed project activity is the installation of a wind power plant/unit. Therefore, the said

project activity, since in this case the baseline may be the continued use of fossil fuels at the site; • *Biomass fired power plants;* • *Hydro power plant that result in new single reservoir or in the increase in existing single reservoir where the power density of the power plant is less than 4 W/m^2.*	criteria is not applicable

B.3. Description of the sources and gases included in the project boundary:

>>

According to ACM0002, version 12.3.0, the spatial extent of the project boundary includes the project power plant and all power plants connected physically to the electricity system that the CDM project power plant is connected to.

The project shall be feeding electricity in the NEWNE Grid which has a pool of state and privately owned power generating plants.

The project activity has a distinctive physical demarcated boundary (highlighted in dotted line):

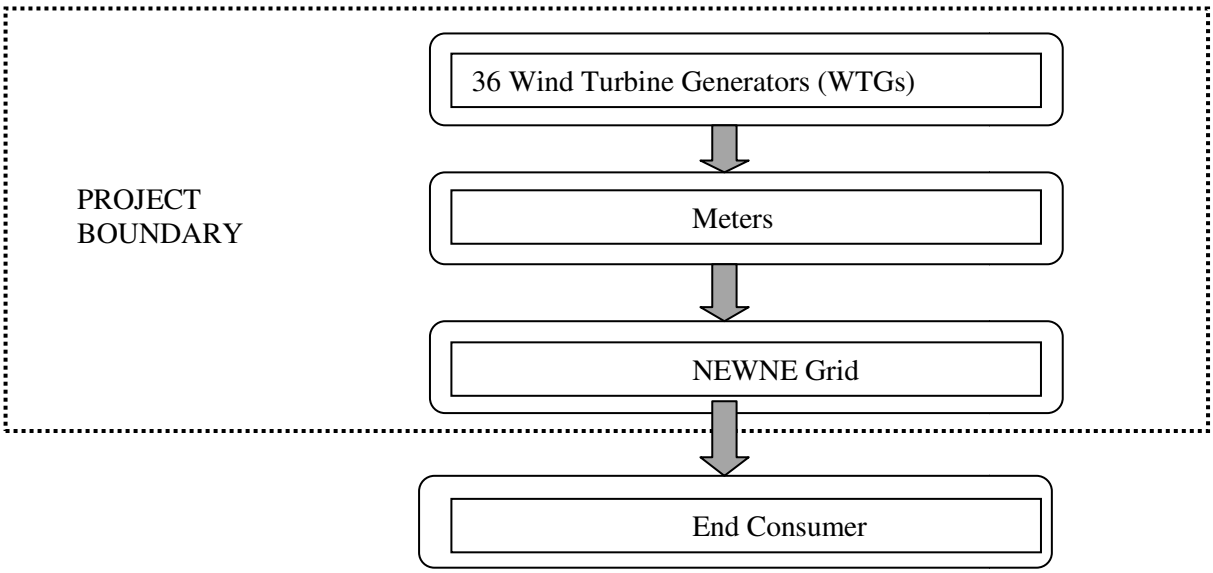

As per Table.1 of ACM0002 version 12.3.0, the selection of gases to be included and excluded within the project activity is as follows:

	Source	Gas	Included	Explanation
Baseline Activity	CO_2 emissions from electricity generation in fossil fuel fired power plants that is displaced due to the project activity	CO_2	Yes	Major emission source
		CH_4	No	Minor emission source
		NO_2	No	Minor emission source
Project Activity	Grid Connected wind power based electricity generation	CO_2	No	Electricity generation by using WTGs does not incur any emissions
		CH_4	No	
		NO_2	No	

B.4. Description of how the baseline scenario is identified and description of the identified baseline scenario:

>>

According to the applied methodology ACM0002, if the project activity is the installation of a new grid-connected renewable power plant/ unit, the baseline scenario is the following:
"Electricity delivered to the grid by the project would have otherwise been generated by the operation of Grid-connected power plants and by the addition of new generation sources as reflected in the combined margin (CM) calculations described in the "Tool to calculate the emission factor for an electricity system – Version 2.2.1".

The proposed project activity is the installation of 14 WEC's of Suzlon's make S95 of 2.1 MW each contributing 29.4 MW of power to the NEWNE grid; the project activity is the installation of a new grid connected power plant hence as per the applied methodology the baseline scenario is the emissions generated by the operation of grid-connected power plants and by the addition of new generation sources as reflected in the combined margin (CM) calculations described in Section B.6 of the PDD.
The Indian grid system is defined below:

Electricity Grid (Present)	Electricity Grid (Earlier)	Geographical Areas Covered
NEWNE Grid	Northern	Chandigarh, Delhi, Haryana, Himachal Pradesh, Jammu and Kashmir, Punjab, Rajasthan, Uttar Pradesh, Uttarakhand
	Western	Chhattisgarh, Gujarat, Daman & Diu, Dadar & Nagar Haveli, Madhya Pradesh, Maharashtra, Goa
	Eastern	Bihar, Jharkhand, Orissa, West Bengal, Sikkim, Andaman-Nicobar
	North-Eastern	Arunachal Pradesh, Assam, Manipur, Meghalaya, Mizoram, Nagaland, Tripura
Southern Grid	Southern	Andhra Pradesh, Karnataka, Kerala, Tamil Nadu,

		Pondicherry, Lakshadweep

Rajasthan state falls under NEWNE grid.
The installed electricity in India as on 31st August, 2011 is given below.[4]

SL. NO.	REGION	THERMAL				Nuclear	HYDRO (Renewable)	R.E.S.@ (MNRE)	TOTAL
		COAL	GAS	DSL	TOTAL				
1	Northern	24232.50	4134.76	12.99	28380.25	1620.00	14422.75	3509.56	47932.56
2	Western	33105.50	7903.81	17.48	41026.79	1840.00	7447.50	5937.60	56251.89
3	Southern	20982.50	4690.78	939.32	26612.60	1320.00	11338.03	10128.96	49399.59
4	Eastern	21122.88	190.00	17.20	21330.08	0.00	3882.12	356.42	25568.62
5	N. Eastern	60.00	787.00	142.74	989.74	0.00	1116.00	223.60	2329.34
6	Islands	0.00	0.00	70.02	70.02	0.00	0.00	6.10	76.12
7	All India	99503.38	17706.35	1199.75	118409.48	4780.00	38206.40	20162.24	181558.12

It is evident from the above table that the installed capacity in India is predominantly thermal power plants; thermal power generation is GHG intensive and is a major source of CO2 emissions. In the absence of the project activity equivalent amount of electricity would have been generated from the existing grid connected power plants and planned capacity additions which are also largely fossil fuel based. Thus generation from the project displaces the electricity generated from existing and planned power plant capacities in the NEWNE grid whose emission intensities are represented by the Combined Margin Emission Factor of the NEWNE Grid. The project activity would reduce 126,817 tCO2 e annually.

The baseline emissions and emission reductions from the project activity are estimated by multiplying the amount of electricity exported by the project activity to the NEWNE grid with the emission factor of the NEWNE grid calculated as the combined margin (CM) of the operating margin (OM) and build margin (BM) emission factors.

$BE_y = EG_{facility, y} * EF_{Grid,CM, y}$

Where:

Parameter	Description
BE_y	Baseline emissions in year y (tCO2)
$EG_{facility, y}$	Quantity of net electricity generation that is produced and fed into the grid as a result of the CDM project activity in year y
$EF_{Grid,CM, y}$ – Grid Emission Factor	Combined margin CO2 emission factor for grid connected power generation in year *y* calculated using the latest version of the .Tool to calculate the emission factor for an electricity system. (tCO2/MWh)

[4] http://www.cea.nic.in/reports/monthly/executive_rep/aug11/8.pdf

B.5. Description of how the anthropogenic emissions of GHG by sources are reduced below those that would have occurred in the absence of the registered CDM project activity (assessment and demonstration of additionality):

>>

As per the decision 17/cp. 7, paragraph 43, a CDM project activity is additional if anthropogenic emissions of green house gases by sources are reduced below those that would have occurred in absence of registered CDM project activity.

Demonstration of Additionality for the project activity

As required in ACM 0002 Version 12.3.0, additionality has been demonstrated and assessed using the latest version of the "Tool for the demonstration and assessment of additionality", Version 06.0.0.

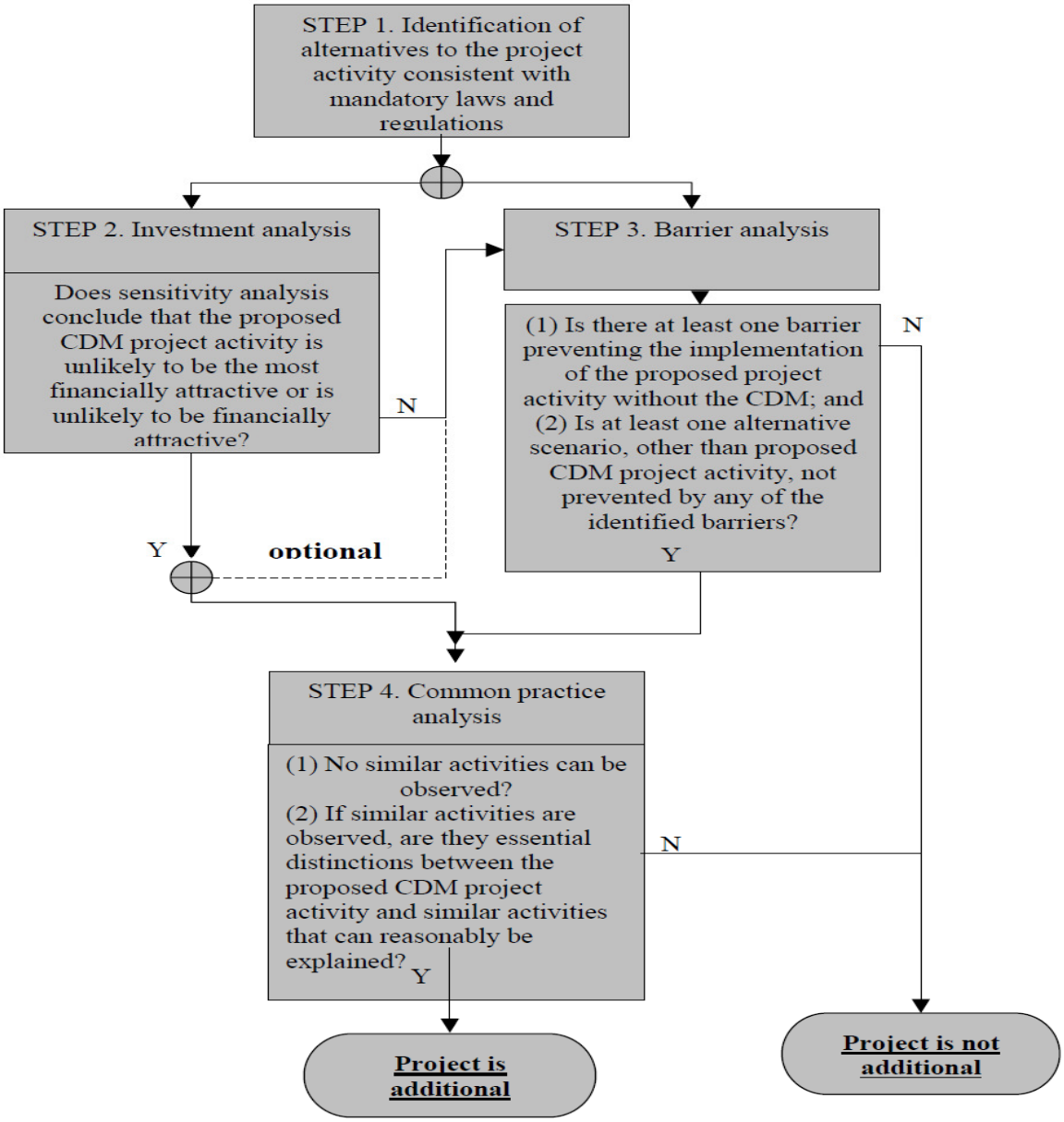

Step 1: Identification of alternatives to the project activity consistent with current laws and regulations

Sub-Step 1a: Define alternative scenarios to the proposed CDM project activity

As per the applied methodology ACM0002, baseline scenario is electricity delivered to the grid by the project activity would have otherwise been generated by the operation of grid-connected power plants and by addition of new generation sources, as reflected in the combined margin (CM) calculations described in the "Tool to calculate the emission factor for an electricity system".

Outcome of Step 1a: The credible alternatives of the project have been identified as:

a. The project activity being undertaken without taking in to consideration the CDM.

b. Equivalent amount of electricity being generated through operation of grid-connected power plants and addition of new generation sources

Sub-step 1b: Consistency with mandatory applicable laws and regulations
The identified alternatives are in consistency with the mandatory applicable laws and regulations. As per the Electricity Act 2003, there is no restriction on the type of fuel to be used for electricity generation. Therefore, the alternatives are in compliance with the local laws of the land. There is no mandate that enforces proponents to implement a wind power project, therefore making the project activity a voluntary initiative.

Outcome of Step 1b: Thus considering that all the above alternatives are in line with the applicable legal and regulatory requirements, the "no project option"; i.e. continuation of current practise where in the equivalent amount of energy would have been produced by the project grid electricity system through its currently running power plants and by new capacity additions; is the chosen baseline scenario which would have happened in the absence of the proposed project activity. Please refer to Annex 3 for more information on the chosen baseline. The "Tool for demonstration and assessment of additionality", Version 06.0.0 states that project participants may choose to apply Step 2 (Investment analysis) OR Step 3 (Barrier analysis) to demonstrate additionality of the project. In the present case, Step 2 has been used to determine additionality.

Step 2: Investment Analysis

Sub-step 2a: Determine appropriate analysis method
Simple cost analysis method (option I) cannot be applied to the proposed project activity since the electricity generated from it will be sold to the grid, leading to an revenue stream in addition to CDM revenue. This is in accordance to the "Tool for the demonstration and assessment of additionality", ver 06.0.0[5].

Guidelines on the assessment of investment analysis, ver 05, EB 62 provide guidance on choosing option II i.e. investment comparison analysis or option III i.e. benchmark analysis. The proposed project's alternative is supply of electricity from a grid; hence option II can't be used here. ..As per the guidelines on the assessment of investment analysis, ver 05, EB 62, return on equity (ROE) has been chosen as appropriate benchmark. Option III assesses if the project's returns are sufficient for investors to make the initial investment and further bear the associated costs of successfully operating the project activity over the crediting period of the project.
The project activity has an equity component of 33.91% and therefore the financial indicator chosen for the project activity is the equity Internal Rate of Return (IRR)

Sub-step 2b: (Option III) – Apply Benchmark analysis

As per paragraph 15 of Guidance on investment analysis, if the benchmark is based on parameters that are standard in the market, the cost of equity should be determined either by: (a) selecting the values provided in Appendix A of the guidelines; or by (b) calculating the cost of equity using best financial practices, based on data sources which can be clearly validated by the DOE, while properly justifying all underlying factors. The project participant has taken 11.75% as cost of equity as per the default values given in Appendix A of the guideline.

[5] http://cdm.unfccc.int/methodologies/PAmethodologies/tools/am-tool-01-v6.0.0.pdf

Further, as per the guidance in paragraph 7 " In situations where an investment analysis is carried out in nominal terms, project participants can convert the real term values provided in the table below to nominal values by adding the inflation rate. The inflation rate shall be obtained from the inflation forecast of the central bank of the host country for the duration of the crediting period. If this information is not available, the target inflation rate if the central bank shall be used. If the information is also not available, then the average forecasted inflation rate for the host country published by the International Monetary Fund World Economic Outlook (IMF) or the World Bank for the next five years after the start of the project activity shall be use."

The project participant has used the inflation forecast rate provided by the Reserve Bank of India (i.e. the Central bank of the host country) for the next ten years. The same has been used to adjust the default value of ROE, which is given in real terms.

Cost of Equity:

Cost of equity$_{Nominal}$ = cost of equity $_{Real}$ + Inflation rate $_{Host\ country}$

= 11.75% +5.50[6]%

= 17.25%

This is the benchmark considered for investment analysis i.e. Cost of equity =17.25%

The parameters and assumptions used for Equity IRR calculations have been mentioned below.

Assumptions:	**Values**	**Units**	**Data Source**
Location - State	Rajasthan		Quotation received prior to decision making. Conformance with guidance 6 of investment analysis guidelines.
Place	Kaladonger		
No of WTGs	36		
Capacity of each WTG	2.1	MW	
Project Size	75.6	MW	
Cost per WTG	131.2	INR Million	
Cost of Project per MW	62.5	INR Million	Calculated
Total Project Cost	**4723.2**	INR Million	Calculated
Means of Finance			
Debt	66	%	Debt to Equity ratio of 66:34 as per IREDA loan sanction letter
Equity	34	%	
Operating Parameters			
Plant Load Factor (net of Transmission loss)	20.10	%	The PLF value has been taken from a third party report by AWS True power dated 14 January 2011. The value chosen is 20.1 %, which is the 20 year P90 production.
Total Generation for the project at above PLF	133.11	Million KWh p.a	

[6] http://rbi.org.in/scripts/PublicationsView.aspx?id=13360

Grid Availability	100	%	The PLF value has been taken from a third party report by AWS True power dated 14 January 2011
Total generation after Line Loss	133.11	Million KWh p.a	
Life of the Wind Turbine	20	Years	Technical Specification document from Suzlon. This is in conformance to Anenx 15, EB 50
O & M cost			
O & M Cost (in Lacs) from 3rd Year of operation	80.28	INR Millions p.a	..... Quotation received prior to decision making. Conformance with guidance 6 of investment analysis guidelines.
Annual escallation from 3rd year	5.0	%	
Financial Parameters			
Interest on Term Loan	12.65%	%	Bank loan letter dated 15/02/2012
Loan repayment period	12.5	Years	Bank loan letter dated 15/02/2012
Number of Instalments	150		Bank loan letter dated 15/02/2012
Instalment amount	20.81	INR Million	
Generation Based Incentive	INR 0.50	INR/KWh	http://www.inwea.org/others/OPERATIONAL_GUIDELINES.pdf
Tariff	4.22	INR/KWh	RERC Tariff Order dated 03 June 2011
Tariff escalation	0	%	
Depreciation Rate			
As per companies Act			
Plant and machinery - SLM	5.28	%	http://www.cwet.tn.nic.in/Docu/Tariff_SERC_23_08_2010.pdf
As per Income Tax Act			
Depreciation rate-first year	15%	%	Appendix I of Income Tax Rules
Taxation			
Corporate Tax	32.45	%	
MAT	20	%	

The input values in the financial analysis were valid at the time when the investment decision was made. The IRR has been calculated for a period of 20 years which is the expected operational lifetime of the project activity.

Sub-step 2c – Calculation and comparison of financial indicators (only applicable to Options II and III)

The equity internal rate of return (IRR) for the proposed project activity without the CDM revenues has been computed for a period of 20 years which is in accordance to the "Guidelines on the assessment of investment analysis" ver. 05, which states that '*a minimum period of 10 years and a maximum of 20 years will be appropriate* for the assessment.

The Equity IRR for the project found to be 7.55% which is lower than benchmark of 17.25%. The summary of the investment is as follows

Project	IRR without CDM	IRR with CDM
Kaladonger wind project in Rajasthan	7.55 %	10.25%

Sub-step 2d: Sensitivity analysis

A sensitivity analysis has been carried out to further strengthen the financial additionality for this project. This was carried out as per the "Guidelines on the assessment of investment analysis" ver. 05, which state that "*Only variables, including the initial investment cost, that constitute more than 20% of either project costs or total project revenues should be subjected to reasonable variation*". Accordingly, four scenarios have been identifies i.e. variation in PLF, tariff, project cost and operation and maintenance cost.

As per version 05 of "GUIDELINES ON THE ASSESSMENT OF INVESTMENT ANALYSIS", Paragraph 21, "*As a general point of departure variations in the sensitivity analysis should at least cover a range of +10% and .-10%, unless this is not deemed appropriate in the context of the specific project circumstances.*"

As per the guidance, it has been decided to do a sensitivity analysis at ±10%

A sensitivity of 10% increase and decrease on all of the above has been performed. The project has been commissioned and the actual values for the parameters to be considered for sensitivity are fall within the limit of ±10% and hence the sensitivity performed inline with the same.

Parameters	**-10%**	**0%**	**10%**
PLF	5.40%	7.55%	9.61%
Tariff	6.78%	7.55%	8.27%
Project Cost	9.97%	7.55%	5.60%
O&M Cost	7.82%	7.55%	7.29%

As per the Annex 58, EB 51 guidance no. 21, **"In cases where a scenario will result in the project activity passing the benchmark or becoming the most financially attractive alternative the DOE shall provide an assessment of the probability of the occurrence of this scenario in comparison to the likelihood of the assumptions in the presented investment analysis, taking into consideration correlations between the variables as well as the specific socio-economic and policy context of the project activity"**

From the above mentioned results of sensitivity analysis, it is evident that the equity IRR does not cross the benchmark within the chosen range. However, the sensitivity at which the equity IRR crosses the benchmark is provided below along with the justification of the probability of these scenarios not occurring.

PLF – With an increase in 45.32% in the PLF, the equity IRR crosses the benchmark. However, the probability of this is nil due to the following reasons:

- The PLF considered as per the independent third party report is 20.10%. The Rajasthan Electricity Regulatory Commission's order dated 16/07/2009[7] considers a PLF of 21% for determining the tariff. Therefore, it is very evident that the PLF assumed by the PP is in line with the tariff order. The probability of an increase in 29.21% is nil.

Power purchase tariff – With an increase in 230% in the tariff, the equity IRR crosses the benchmark. However, the probability of this is nil due to the following reasons:

- The Rajasthan Electricity Regulatory Commission's order dated 03/06/2011 fixes a tariff of INR 4.22 per unit. As per the actual PPA signed by the PP, the tariff of INR 4.46 per unit has been fixed for a period of 20 years. Even at this actual tariff, the equity IRR is below the benchmark. Therefore The probability of an increase in tariff by 230% is nil

Project cost – With a decrease in 30.1% in the project cost, the equity IRR crosses the benchmark. However, the probability of this is nil due to the following reasons:

- The project activity is already commissioned and the actual project cost is INR. 4500 Millions which is only 4.73% lesser than the quotation cost. Even at the actual cost, the equity IRR is below the benchmark. Therefore the probability of any further reduction in project cost cannot be expected.

O&M cost – With a decrease in over 411.0% in the O&M cost, the equity IRR crosses the benchmark. However, the probability of this is nil due to the following reasons:

- The project activity is already commissioned and the actual O&M cost is INR.76.5 Million per year which is only 4.7% lesser than the quotation cost. Even at the actual cost, the equity IRR is below the benchmark. Therefore the probability of any further reduction in project cost cannot be expected.

The results of the sensitivity analysis clearly illustrate that even with variation in critical parameters of the project activity, the equity IRR remains lower than the benchmark return on equity i.e. 17.25%. Thus it can be concluded that the proposed project activity is financially unattractive and would not have been implemented without the benefits from the sale of revenues through CDM. Hence, the project activity is additional.

[7] http://www.rerc.rajasthan.gov.in/TariffOrders/Order77.pdf

Outcome of Step 2
As can be seen, the equity IRR of the project activity remains well below the benchmark even under the sensitivity analysis. Therefore it can be concluded that the proposed CDM project activity is unlikely to be the most financially/economically attractive.

Step 3: Barrier analysis
Not Opted for.

Step 4: Common Practise analysis:

For Common practice analysis, Version 02.0 of the GUIDELINES ON COMMON PRACTICE has been used. As per the guideline the following steps have been suggested:

Step 1: calculate applicable capacity or output range as +/-50% of the total design capacity or output of the proposed project activity:
The proposed project activity is of 75.6 MW capacity. Considering +/- 50% of the project activity capacity the output range to be considered for the common practice analysis is 37.8 MW to 113.4 MW.

Step 2: identify similar projects (both CDM and non-CDM) which fulfil all of the following conditions:

a. ***The projects are located in the applicable geographical area***
b. ***The projects apply the same measure as the proposed project activity***
c. ***The projects use the same energy source/fuel and feedstock as the proposed project activity, if a technology switch measure is implemented by the proposed project activity***
d. ***The plants in which the projects are implemented produce goods or services with comparable quality, properties and applications areas (e.g. clinker) as the proposed project plant***
e. ***The capacity or output of the projects is within the applicable capacity or output range calculated in Step 1***
f. ***The projects started commercial operation before the project design document (CDM-PDD) is published for global stakeholder consultation or before the start date of proposed project activity, whichever is earlier for the proposed project activity***

All wind power plants in the applicable output range of 37.8 MW to 113.4 MW which started commercial operation before the start date of proposed project activity (29 July 2011) in India are as mentioned below:

Wind power project: The "Directory – Indian Wind power 2011", is an official compendium of wind power projects in India. The Wind Power Directory provides installation of wind turbines by a project owner along with information on WTG capacity, total installation, location & date of commissioning. As per Directory – Indian Wind power 2011 there are 15 wind power plants in India, which are within the given range.

The complete list of wind power plants in the given capacity range in India is as follows:

Wind Power Plants

Sl.No	Name of project proponent	CAPACITY in MW	State
1	Enerecon Windfarms Hindusthan P. Ltd	60	Rajasthan

Sl.No	Name of project proponent	CAPACITY in MW	State
2	Essel Mining & Industries Ltd	75	Maharashtra
3	Gujarat NRE Coke Limited	60	Gujarat
4	HZL	88.8	Gujarat
5	Madras Cement Limited	74	Tamil Nadu
6	MSPL Group	92.5	Karnataka
7	Roaring 40s Wind Farms Private Limited.	50.4	Maharashtra
8	Tata Power Company	50.4	Gujarat
9	Tata Power Company	50.4	Maharashtra
10	Tata Power Company	50.4	Karnataka
11	CLP Windfarm (I) Pvt Ltd	49.5	Tamil Nadu
12	GACL	39	Gujarat
13	Madras Cement Limited	41.6	Tamil Nadu
14	Reliance Innoventures Private Limited	45	Maharashtra
15	VRL Logistics	42.5	Karnataka

Step 3: within the projects identified in Step 2, identify those that are neither registered CDM project activities, project activities submitted for registration, nor project activities undergoing validation. Note their number Nall

From the list of power plants mentioned in Step 2 the list of wind power plants which are neither registered CDM project activities, project activities submitted for registration, nor project activities undergoing validation are identified.
There is no wind power plant within the given range which is not under CDM process.
All the wind power plants along with their CDM web links is provided below:

List of Wind Power Plants under CDM

Sl.No	Name of project proponent	CAPACITY in MW	State	CDM status	CDM reference
1	Enerecon Windfarms Hindusthan P. Ltd	60	Rajasthan	Yes	http://cdm.unfccc.int/Projects/DB/SGS-UKL1181742063.57/view
2	Essel Mining & Industries Ltd	75	Maharashtra	Yes	http://cdm.unfccc.int/filestorage/O/6/L/O6LOWTE60VD7BDDY8ZB8AQBVNQQZCJ/1115%20PDD%20revised.pdf?t=YW98bTl1aXJifDCzVAdNro4ow_VIcM1HKoLI
3	Gujarat NRE Coke Limited	60	Gujarat	Yes	http://cdm.unfccc.int/Projects/Validation/DB/3XJDEJWIXD7AE8K5O7RYT5HU1CV2HB/view.html
4	HZL	88.8	Gujarat	Yes	http://cdm.unfccc.int/Projects/DB/BVQI1211956663.14/view
5	Madras Cement Limited	74	Tamil Nadu	Yes	http://cdm.unfccc.int/Projects/Validation/DB/BHX0TQO6T2FMQNF1A59AGMX7X5E4DD/view.html
6	MSPL Group	92.5	Karnataka	Yes	http://cdm.unfccc.int/UserManagement/FileStorage/6TU55OXGCAEHNZQV27694ATC31SOM3
7	Roaring 40s Wind Farms Private Limited.	50.4	Maharashtra	Yes	http://cdm.unfccc.int/Projects/Validation/DB/GT5ME4TC32NKLA6A22ZBR00FYBC54N/view.html
8	Tata Power Company	50.4	Gujarat	Yes	http://cdm.unfccc.int/Projects/Validation/DB/V3VLCQGE9AP9TX41VS9FJI8UKLMBOA/view.html
9	Tata Power Company	50.4	Maharashtra	Yes	http://cdm.unfccc.int/Projects/projsearch.html
10	Tata Power Company	50.4	Karnataka	Yes	http://cdm.unfccc.int/filestorage/7/C/K/7CKRHG6VYEQ1IZ3XOTUBNWJ4SD2LFP/TPCL%20PDD.pdf?t=V3h8bTl1ZzU5fDCoBHSNWldLShKCVQ--4HRr
11	CLP Windfarm (I) Pvt Ltd	49.5	Tamil Nadu	Yes	http://cdm.unfccc.int/Projects/Validation/DB/49HF24EMEQCYY7ULDARG7G3MD6KM5Y/view.html
12	GACL	39	Gujarat	Yes	http://cdm.unfccc.int/Projects/Validation/DB/CBEZRP9HZI993GZEUKGZF6JOGZJB45/view.html
13	Madras Cement Limited	41.6	Tamil Nadu	Yes	http://cdm.unfccc.int/Projects/Validation/DB/AOLO0C51SE7IUL19FP3B27HORLRSK0/view.html

Sl.No	Name of project proponent	CAPACITY in MW	State	CDM status	CDM reference
14	Reliance Innoventures Private Limited	45	Maharashtra	Yes	http://cdm.unfccc.int/filestorage/D/5/9/D59AFLHK1U23OTNZ74S0ECVJMPQXBG/RINL%20PDD.pdf?t=TnF8bTl1ajk5fDCCyssCyjrb16FgXWo1pGnK
15	VRL Logistics	42.5	Karnataka	Yes	http://cdm.unfccc.int/Projects/DB/SGS-UKL1225104443.35/view

Hence N_{all} = 0

Step 4: within similar projects identified in Step 3, identify those that apply technologies that are different to the technology applied in the proposed project activity. Note their number N_{diff}

Since N_{all} = 0, therefore N_{diff} automatically becomes 0

Hence N_{diff} = 0

Step 5: calculate factor $F=1-N_{diff}/N_{all}$ representing the share of similar projects (penetration rate of the measure/technology) using a measure/technology similar to the measure/technology used in the proposed project activity that deliver the same output or capacity as the proposed project activity

F = 1-(0/0)
Thus F = 0

As per version 02 of the GUIDELINES ON COMMON PRACTICE , ***The proposed project activity is a "common practice" within a sector in the applicable geographical area if the factor F is greater than 0.2 and N_{all}-N_{diff} is greater than 3.***

As per the above calculations F = 0 which is less than 2 and N_{all}-N_{diff} = 0, which is less than 3.

Thus the project is not a common practice.

Demonstration of Prior CDM Consideration:

BVUPL has decided to undertake an investment in wind power generation with due consideration of CDM revenue at conceptualization stage itself. Board resolution to this effect was passed on 22/07/2011. In order to commence the CDM related activities, project proponent had appointed CDM consultant and the designated operational entity to ascertain the CDM process timely.

Following are the some of the major activities undertaken by the Project participant to demonstrate the serious consideration of CDM.

Chronology of events:

Project	Date	CDM events	Date

Implementation			
Quotation received for the project	04 July 2011		
		Board Resolution considering CDM benefits[8]	22 July 2011
Purchase Order placement	29 July 2011		
		Prior CDM Consideration intimation sent to UNFCCC and Ministry of Environment and Forests (Host Country DNA)	12 September 2011
		Local CDM Stakeholder consultation meeting	9 December 2011

Demonstration of Prior CDM Consideration:
As per the *'Guidelines on the demonstration and assessment of prior consideration of the CDM, ver 04, EB 62'*[9], for project activities with a starting date on or after 2 August 2008, the project participant is supposed to inform a Host Party designated national authority (DNA) and the UNFCCC secretariat in writing of the commencement of the project activity and of their intention to seek CDM status, within six months of the project activity start date. BVUPL sent out the prior consideration form in the standardized format with the precise geographical location and a brief description of the proposed project activity on 12th September 2011, which is within six months of the start date of the project i.e. 29 July 2011, as indicated in the above table.

From the above investment analysis and chronology of events, it can be concluded that the project is additional.

B.6. Emission reductions:

B.6.1. Explanation of methodological choices:

>>

Emission Reductions
The project activity reduces carbon dioxide by displacing thermal coal fired grid electricity generation with renewable energy based generation. The emission reduction ERy by the project activity during a given year y is the difference between baseline emissions (BE_y) and project emissions (PE_y) as per the consolidated methodology ACM002 version 12.3.0 as follows:

$$ER_y = BE_y - PE_y$$

[8] The decision to go ahead with the project with CDM was taken by Caparo Energy (India) Limited. Later the name of the company was changed to Mytrah Energy (India) Limited (MEIL) in 27/09/2011. BVUPL is a special purpose vehicle launched by MEIL to execute the project activity

[9] http://cdm.unfccc.int/Reference/Guidclarif/reg/reg_guid04.pdf

As per ACM002 version 12.3.0, baseline emissions include only CO_2 emissions from electricity generation in fossil fuel fired power plants that are displaced due to the project activity, calculated as follows:

$$BEy = EG_{facility,y} * EF_{grid,CM,y}$$

Where:

BE_y	=	Baseline emissions in year *y* (tCO_2)
$EG_{facility,y}$	=	Quantity of net electricity generation that is produced and fed into the grid as a result of the implementation of the CDM project activity in year *y* (MWh)
$EF_{grid,CM,y}$	=	Combined margin CO_2 emission factor for grid connected power generation in year *y* calculated using the latest version of the "Tool to calculate the emission factor for an electricity system" (tCO_2/MWh)

The baseline emission factor ($EF_{grid,CM,y}$) is calculated as a combined margin (CM), consisting of the combination of operating margin (OM) and build margin (BM) factors calculated according to version 02.2.0 of "Tool to calculate the emission factor for an electricity system", using the following six steps:

Step 1: Identify the relevant electricity systems
As explained in the section B.4 above, NEWNE grid has been identified as the relevant electric power system in this case.

Step 2: Choose whether to include off-grid power plants in the project electricity system (optional)
Since majority of the power generated in India is fed in the regional grids, the project activity doesn't include off-grid power plants in the project electricity system.

Step 3: Select a method to determine the operating margin (OM)
Version 02.2.0 of the "Tool to calculate the emission factor for an electricity system" provides four options for calculating the operating margin emission factor ($EF_{grid,OM,y}$) and guidance for choosing the option for the corresponding project activity. The options are:

a) Simple OM, or
b) Simple adjusted OM, or
c) Dispatch Data Analysis OM, or
d) Average OM.

The tool states that any of the four above methods can be used. In the current project activity, simple OM method has been chosen to calculate the operating margin emission factor ($EF_{grid,OM,y}$).
According to the Version 02.2.0 of the "Tool to calculate the emission factor for an electricity system", Simple OM method (option a) can only be used if low-cost/ must run resources constitute less than 50% of total grid generation in:

1) Average of the five most recent years, or
2) Based on long-term averages for hydroelectricity production

In the context of Version 02.2.0 of the "Tool to calculate the emission factor for an electricity system", low cost/must run resources are defined as power plants with low marginal generation costs or power plants that are dispatched independently of the daily or seasonal load of the grid. They typically include hydro, geothermal, wind, low-cost biomass, nuclear and solar generation. If coal is obviously used as must-run, it should also be included in this list, i.e. excluded from the set of plants.

Share of Must-Run (Hydro/Nuclear) (% of Net Generation)					
	2006-07	2007-08	2008-09	2009-10	2010-11
NEWNE	18.5%	19.0%	17.4%	15.9%	17.6%
South	28.3%	27.1%	22.8%	20.6%	21.0%
India	20.9%	21.0%	18.7%	17.1%	18.4%

Ref: CO_2 Baseline Database for the Indian Power sector – CEA, Version 7, January 2012

Percentage of total grid generation by low cost/ must run plants in the NEWNE grid (on basis of average of five most recent years) = 17.7%

The calculation above shows that the generation from low cost/ must run resources constitutes less than 50% of the total grid generation; hence usage of the Simple OM method for the project activity is justified.

In terms of data vintage, the Simple OM emission factor can be calculated using either of the two following data vintages for year(s) y:

- *Ex ante option: In this method, a 3-year generation-weighted average has to be calculated based on the most recent data available at the time of submission of the CDM-PDD to the DOE for validation, without the requirement to monitor and recalculate the emissions factor during the crediting period,*

Or

- *Ex post option: The year in which the project activity displaces grid electricity, requiring the emissions factor to be updated annually during monitoring. If the data required for calculating the emission factor for year y is usually only available later than six months after the end of the year y, alternatively the emission factor of the previous year (y-1) may be used. If the data is usually only available 18 months after the end of year y, the emission factor of the year proceeding the previous year (y-2) may be used. The same data vintage (y, y-1, y-2) should be used throughout all crediting periods.*

In this case, ex ante option has been chosen where in a three year generation weighted average based on the most recent data has been calculated and the same would be fixed for the crediting period.

Step 4: Calculate the operating margin emission factor according to the selected method

Amongst the four options identified in Step 3 above, the Simple Operating Margin is used for the project activity as justified above.

Simple OM: The simple OM emission factor ($EF_{grid,OMsimple,y}$) is calculated as the generation-weighted average CO_2 emissions per unit net electricity generation (tCO_2/MWh) of all generating power plants serving the system, not including low-operating cost and must-run power plants. It may be calculated:

- Based on the net electricity generation and a CO_2 emission factor of each power unit (Option A)

Or

- Based on the total net electricity generation of all power plants serving the system and the fuel types and total fuel consumption of the project electricity system (Option B)

Option A is the preferred choice according to the "Tool to calculate the emission factor for an electricity system", Version 02.2.0. In India, the Central Electricity Authority (CEA) has estimated the baseline emission for the power sector. This data has also been endorsed by NCDMA (DNA of India) and is the most authentic information available on the public domain. The CEA has compiled the CO_2 emissions database, based on generation, fuel consumption and fuel calorific value data furnished by each power station. The simple OM emission factor has thus been calculated using option A1 i.e. based on fuel consumption and net electricity generation of each power plant/ unit. The details of the same can be found on CEA website at http://cea.nic.in/reports/planning/cdm_co2/cdm_co2.htm.

According to option A, the simple OM emission factor is calculated based on the net electricity generation of each power unit and an emission factor for each power unit, as follows:

$$EF_{grid,OMsimple,y} = \frac{\sum_m EG_{m,y} \times EF_{EL,m,y}}{\sum_m EG_{m,y}}$$

Where:
$EF_{grid,OMsimple,y}$ = Simple operating margin CO_2 emission factor in year y (t CO_2/MWh)
$EG_{m,y}$ = Net quantity of electricity generated and delivered to the grid by power unit m in year y (MWh)
$EF_{EL,m,y}$ = CO_2 emission factor of power unit m in year y (t CO_2/MWh)
m = All power units serving the grid in year y except low-cost / must-run power units
y = the relevant year as per the data vintage chosen in Step 3

Determination of $EF_{EL,\,m,\,y}$
As per the "Tool for calculating the emission factor of an electricity system", version 02.2.0, $EF_{EL,\,m,\,y}$ has been calculated as per the **option A1**.

If for a power unit *m* data on fuel consumption and electricity generation is available, the emission factor ($EF_{EL,\,m,\,y}$) should be determined as follows:

$$EF_{EL,m,y} = \frac{\sum_i FC_{i,m,y} \times NCV_{i,y} \times EF_{CO2,i,y}}{EG_{m,y}}$$

Where:
$EF_{EL,m,y}$ = CO_2 emission factor of power unit *m* in year *y* (tCO_2/MWh)
$FC_{i,m,y}$ = Amount of fossil fuel type *i* consumed by power unit *m* in year *y* (Mass or volume unit)
$NCV_{i,y}$ = Net calorific value (energy content) of fossil fuel type *i* in year *y* (GJ/mass or volume unit)

$EF_{CO2,i,y}$ = CO_2 emission factor of fossil fuel type *i* in year *y* (tCO_2/GJ)
$EG_{m,y}$ = Net quantity of electricity generated and delivered to the grid by power unit *m* in year *y* (MWh)
m = All power units serving the grid in year *y* except low-cost/must-run power units
i = All fossil fuel types combusted in power unit *m* in year *y*
y = the relevant year as per the data vintage chosen in Step 3

Since Option 1 has been considered i.e. Only grid power plants were included in the calculation as per Step 2; according to the "Tool for calculating the emission factor for an electricity system" , version 02.2.0, $EG_{m,y}$ has been determined as per the provisions in the monitoring tables.

Since Ex-ante option has been selected for data vintage, the Simple OM emission factor ($EF_{grid,OMsimple,y}$) is taken for the most recent three years and an average value has been considered as the OM emission factor for the baseline ($EF_{grid,OM,y}$).

In India, the CEA (Central Electricity Authority) has estimated the baseline emission factor for the power sector. This data has also been endorsed by the NCDMA (Designated National Authority) and is the most authentic information available in the public domain. The details of same can be found on CEA website at http://cea.nic.in/reports/planning/cdm_co2/cdm_co2.htm.

Operating Margin Estimation for NEWNE Grid (tCO_2/ MWh)	
OM, 2008 – 09	1.0065
OM, 2009 – 10	0.9777
OM, 2010 – 11	0.9706
Weighted Average OM ($EF_{grid,OM,y}$)	**0.9841**

Step 5: Calculate the build margin (BM) emission factor

The build margin emissions factor is the generation-weighted average emission factor (tCO_2/ MWh) of all power units m during the most recent year *y* for which power generation data is available, calculated as follows:

$$EF_{grid,BM,y} = \frac{\sum_m EG_{m,y} \times EF_{EL,m,y}}{\sum_m EG_{m,y}}$$

Where:
$EF_{grid,BM,y}$ = Build margin CO_2 emission factor in year *y* (tCO_2/MWh)
$EG_{m,y}$ = Net quantity of electricity generated and delivered to the grid by power unit *m* in year *y* (MWh)
$EF_{EL,m,y}$ = CO_2 emission factor of power unit *m* in year *y* (tCO_2/MWh)
m = Power units included in the build margin
y = Most recent historical year for which power generation data is available

The emission factor ($EF_{EL,m,y}$) is determined as follows: Central Electricity Authority (CEA) has estimated the build margin emission factor $EF_{grid,BM,y}$ is based on the most recent information available on the plants already built for sample group *m* at the time of PDD submission. The sample group *m* consists of the power plant capacity additions in the electricity system that comprise 20% of the system generation and that have been built most recently. In this case, the CEA data has been used as:

Build Margin Estimation for NEWNE Grid (tCO_2/ MWh)	
BM ($EF_{grid,BM,y}$), 2010 - 11	**0.8587**

With regards to data vintage, the project participant wishes to use Option 1 i.e. calculating build margin emission factor *ex ante* based on the most recent information available on units already built for sample group *m* at the time of CDM-PDD submission to the DOE for validation, for the first crediting period. For the second crediting period, the build margin emission factor should be updated based on the most recent information available on units already built at the time of submission of the request for renewal of the crediting period to the DOE. For the third crediting period, the build margin emission factor calculated for the second crediting period should be used. This option does not require monitoring the emission factor during the crediting period.

Step 6: Calculate the combined margin (CM) emission factor

As per the "Tool to calculate the emission factor for an electricity system", version 02.2.0, Weighted average CM method is used. The combined margin emissions factor is calculated as the weighted average of the Operating margin emission factor ($EF_{grid, OM, y}$) and the build emission factor ($EF_{grid, BM, y}$):

$$EF_{grid,CM,y} = EF_{grid,OM,y} \times W_{OM} + EF_{grid,BM,y} \times W_{BM}$$

Where,
$EF_{grid,BM,y}$ = Build margin CO_2 emission factor in year y (tCO_2/MWh) …….. Calculated in step 5 above
$EF_{grid,OM,y}$ = Operating margin CO_2 emission factor in year y (tCO_2/MWh) …..Calculated in step 4 above
w_{OM} = Weighting of operating margin emissions factor (%)
w_{BM} = Weighting of build margin emissions factor (%)

For wind and solar powered projects the defaults weights are as follows: W_{OM} = 0.75 and W_{BM} = 0.25

Hence the baseline emission factor is calculated as follows.

$EF_{grid,CM,} = EF_{grid,OM,} \times W_{OM} + EF_{grid,BM,} \times W_{BM}$

=0.9841*0.75+0.8587*0.25
=0.9527 tCO_2/MWh

Thus the resulting combined emission factor is 0.9527tCO_2/MWh

As aforesaid, Central Electricity Authority (CEA) has calculated the baseline emission factors for the regional grids in India according to the formulas specified above. As this is the most authentic information available in the public domain, the baseline emission factor used in the calculation of baseline emissions for the proposed project activity is being referred from the latest version of the same[10].

[10] http://cea.nic.in/reports/planning/cdm_co2/cdm_co2.htm

Combined Margin Estimation for NEWNE Grid (tCO_2/ MWh)	
OM, 2008 - 09	1.0065
OM, 2009 - 10	0.9777
OM, 2010 - 11	0.9706
Average OM ($EF_{grid, OM, y}$)	**0.9841**
BM ($EF_{grid,BM,y}$)**, 2010 - 11**	**0.8587**
Combined Margin ($EF_{grid, CM, y}$)	**0.9527**

Project activity emissions
According to the chosen baseline methodology ACM002 Version 12.3.0, the project emissions are zero since it is a renewable power generation project.

Leakage
As per the consolidated methodology ACM002, version 12.3.0, No leakage emissions are considered. The main emissions potentially giving rise to leakage in the context of electric sector projects are emissions arising due to activities such as power plant construction and upstream emissions from fossil fuel use (e.g. extraction, processing, and transport). These emissions sources are neglected.

B.6.2. Data and parameters that are available at validation:

(Copy this table for each data and parameter)

Data / Parameter:	$EF_{grid,OMsimple,y}$
Data unit:	tCO_2/MWh
Description:	operating margin CO_2 emission factor of NEWNE grid
Source of data used:	Central Electricity Authority:CO_2 Emission Database CEA CO_2 Baseline database Version 07[11]
Value applied:	0.9841
Justification of the choice of data or description of measurement methods and procedures actually applied :	The operating margin emission factor data has been deduced from CO_2 Database.
Any comment:	The operating margin emission factor is a 3-year generation-weighted average data, based on the most recent data available on CEA database at the time of submission of the CDM-PDD to the DOE for validation

Data / Parameter:	$EF_{grid,BM,y}$
Data unit:	tCO_2/MWh
Description:	Build margin CO_2 emission factor of NEWNE grid

[11] http://www.cea.nic.in/reports/planning/cdm_co2/cdm_co2.htm

Source of data used:	Central Electricity Authority:CO2 Emission Database CEA CO_2 Baseline database Version 07
Value applied:	0.8587
Justification of the choice of data or description of measurement methods and procedures actually applied :	The Build margin emission factor data has been deduced from CO_2 Database.
Any comment:	The build Margin would be calculated ex ante and fixed during the crediting period. For ex ante calculation the most recent data available has been used and the build margin thus calculated is 0.8587

Data / Parameter:	$EF_{grid,CM,y}$
Data unit:	tCO_2/MWh
Description:	Combined margin CO_2 emission factor of NEWNE grid
Source of data used:	Central Electricity Authority:CO_2 Emission Database CEA CO_2 Baseline database Version 07
Value applied:	0.9527
Justification of the choice of data or description of measurement methods and procedures actually applied :	Calculated as per the procedures in "Tool to calculate the emission factor for an electricity system" with data deduced from CEA
Any comment:	The Combined Margin would be calculated ex ante and fixed during the crediting period.

B.6.3. Ex-ante calculation of emission reductions:

>>

According to the methodology, Emission reductions are calculated as follows:

$$ER_y = BE_y - PE_y$$

As the project activity is wind power project, project emissions are zero and the resulting emission reduction is as follows.

$$ER_y = BE_y$$

As per Step 6 of the section B.6.1, $\mathbf{EF_{grid,CM,y}}$ has been calculated as **0.9527**

$\mathbf{EG_{facility,y}}$ or the annual electricity displaced by the project activity (EG_y) has been calculated as follows:

Annual net electricity supplied to the grid by the project activity
= Capacity * PLF * 8760/1000
= 75600 * 20.10 %% * 8760/1000
= 133113.46MWh

Hence, **BEy = 133113.46 (MWh) * 0.9527 (tCO_2/ MWh) = 126817tCO_2**

Since, **ER_y = BE_y**
So, Emission reductions (**ER_y**) from 2013 – 14 onwards = **126817 tCO_2**

B.6.4 Summary of the ex-ante estimation of emission reductions:

>>

Year	Estimation of baseline emissions (tonnes of CO_2)	Estimation of project activity emissions (tonnes of CO_2)	Estimation of leakage (tonnes of CO_2)	Estimation of overall emission reductions (tonnes of CO_2)
2013	**126817**	0	0	**126817**
2014	**126817**	0	0	**126817**
2015	**126817**	0	0	**126817**
2016	**126817**	0	0	**126817**
2017	**126817**	0	0	**126817**
2018	**126817**	0	0	**126817**
2019	**126817**	0	0	**126817**
2020	**126817**	0	0	**126817**
2021	**126817**	0	0	**126817**
2022	**126817**	0	0	**126817**
Total (tonnes of CO_2)	**1268170**	0	0	**1268170**

B.7. Application of the monitoring methodology and description of the monitoring plan:

B.7.1 Data and parameters monitored:

Data / Parameter:	$EG_{facility, y}$
Data unit:	MWh
Description:	Quantity of Net Electricity exported to the grid during the year y.
Source of data to be used:	Monthly billing records issued by JVVNL
Value of data applied for the purpose of calculating expected emission reductions in section B.5	133113.46
Description of measurement methods and procedures to be applied:	Net electricity supplied will be calculated based on the difference between calculated values of “export” and calculated value “import” on the JVVNL energy meter at the common evacuation point and the percentage transmission loss as prescribed in the PPA for metering at 220 kV. Refer to Annex 4 of the

	PDD for more details on the calculation procedure. **Monitoring**: Continuous measurement and monthly recording of electricity export and import. **Recording**: Electronic/ Paper **Recording Frequency**: Continuous monitoring and monthly recording **Calibration Frequency**: Once a year. Accuracy class of 0.2s
QA/QC procedures to be applied:	Net electricity supplied to the grid by the project activity will be cross checked with invoices submitted to JVVNL. The meter(s) shall be calibrated and maintained by the state utility as per their own schedule, and this frequency of meter calibration is not within the control of the Project Proponent
Any comment:	-

B.7.2. Description of the monitoring plan:

>>

The organisational structure of this CDM project activity is as follows:

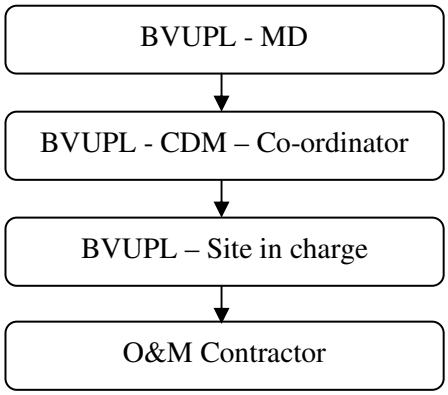

The project proponent has entered into agreement with the WTG- Supplier – Suzlon Energy Limited for the operation and maintenance of WTGs. The WTG supplier has dedicated and technically well equipped O&M team[12] for day to day Operation and maintenance of each WTG. O&M contractor will provide a monthly report, which includes generation data, major breakdown events and machine availability. Site in-charge is responsible for recording of monthly Meter Readings of export and import. Monthly power export and import data will be sent regularly to CDM coordinator of BVUPL.

The detailed monitoring plan has been described in Annex 4 of the PDD.

B.8. Date of completion of the application of the baseline study and monitoring methodology and the name of the responsible person(s)/entity(ies):

>>

[12] Suzlon Energy limited is an ISO certified company with all training needs identified and document as per the ISO requirement. O&M is one of their service offering for which they have trained staff

Date of completion of the application of baseline study and monitoring methodology: 05/04/2012.

Name of the responsible entity: M/s Bindu Vayu Urja Private Limited (BVUPL)
The responsible entity is same as participant mentioned in Annex I to this document.

SECTION C. Duration of the project activity / crediting period

C.1. Duration of the project activity:

C.1.1. Starting date of the project activity:

>>

As per Glossary of CDM terms[13], *"the start date shall be considered to be the date on which the project participant has committed to expenditures related to the implementation or related to the construction of the project activity"*. Complying with the above norms the start date considered for the project activity is 29 /07/2011 i.e., the date on which purchase orders has been placed with Suzlon Energy Limited.

C.1.2. Expected operational lifetime of the project activity:

>>

20 years.

C.2. Choice of the crediting period and related information:

C.2.1. Renewable crediting period:

C.2.1.1. Starting date of the first crediting period:

>>
Not Applicable

C.2.1.2. Length of the first crediting period:

>>
Not Applicable

C.2.2. Fixed crediting period:

C.2.2.1. Starting date:

>>
31/12/2012 or Date of registration of the project, whichever is later

C.2.2.2. Length:

>>

[13] http://cdm.unfccc.int/Reference/Guidclarif/glos_CDM.pdf

10 years, 0 months

SECTION D. Environmental impacts

>>

D.1. Documentation on the analysis of the environmental impacts, including transboundary impacts:

>>

As per the prevailing Ministry of Environment and Forest laws, (the Schedule 1 of Ministry of Environment and Forests (Government of India) notification dated September 14, 2006), 38 activities are required to undertake environmental impact assessment studies. Environmental Impact Assessment study is not required for wind mill project as there is no negative environmental impact due to the project activity and wind energy is one of the cleanest sources of energy.

D.2. If environmental impacts are considered significant by the project participants or the host Party, please provide conclusions and all references to support documentation of an environmental impact assessment undertaken in accordance with the procedures as required by the host Party:

>>

Since the project activity is a renewable energy project, there will be no negative impact out of the project.

SECTION E. Stakeholders' comments

>>

E.1. Brief description how comments by local stakeholders have been invited and compiled:

>>

The stakeholders identified for the project were the occupants of the villages around and the local communities, NGOs, governmental agencies, BVUPL employees and contractors. Local population is considered to be a major stakeholder with respect to the project activity.

The meeting started with the welcome address by the representative of BVUPL. He further explained about the wind project taken up by the company. Representative of BVUPL further explained the purpose of the meeting and detailed each questions in the questionnaire. He then explained about the advantages of the wind energy generation with respect to it being a renewable source of power in the region.

The villagers wished to know the impact of WTGs on the environment in the region. Further to the discussion, the representative of Suzlon Energy Limited explained that wind power generation is an eco-friendly technology which will have no harmful effect on the environment. Finally the comments were received from the stakeholder, which has been briefed in section E-2.

E.2. Summary of the comments received:

>>

According to the feedback received from the stakeholders which included farmers, laborers etc., due to the erection of wind farms, the socio-economic situation in the area and the village people's living standard has been improved.

It was emphasized by the stakeholders that the project has not only provided employment but also significantly contributed to the infrastructure development likes puccha roads.

The stakeholders also expressed satisfaction that the project would help alleviating the power deficit currently being faced by the region.

E.3. Report on how due account was taken of any comments received:

>>

All comments were positive. No negative comments were received from stakeholders.

Annex 1

CONTACT INFORMATION ON PARTICIPANTS IN THE PROJECT ACTIVITY

Organization:	M/s Bindu Vayu Urja Private Limited (BVUPL)
Street/P.O.Box:	8001, Q-City, S.No: 109, Nanakramguda, Gachibowli
Building:	
City:	Hyderabad
State/Region:	Andhra Pradesh
Postcode/ZIP:	500032
Country:	India
Telephone:	+91 40 33760100
FAX:	+91 40 33760101
E-Mail:	info@mytrah.com
URL:	
Represented by:	
Title:	The Managing Director
Salutation:	Mr.
Last name:	Kailas
Middle name:	
First name:	Vikram
Department:	
Mobile:	
Direct FAX:	+91 40 3376 0101
Direct tel:	+91 40 3376 0100
Personal e-mail:	vikram.kailas@mytrah.com

Annex 2

INFORMATION REGARDING PUBLIC FUNDING

No public funding is available for the project.

Annex 3

BASELINE INFORMATION

Grid scenario in India

As evident from Table 1, the grid electricity in India today is clearly dominated by thermal generation, predominantly coal.

Table 1: Region wise generating installed capacity (MW) as on 31.08.2011

SL. NO.	REGION	THERMAL				Nuclear	HYDRO (Renewable)	R.E.S.@ (MNRE)	TOTAL
		COAL	GAS	DSL	TOTAL				
1	Northern	24232.50	4134.76	12.99	28380.25	1620.00	14422.75	3509.56	47932.56
2	Western	33105.50	7903.81	17.48	41026.79	1840.00	7447.50	5937.60	56251.89
3	Southern	20982.50	4690.78	939.32	26612.60	1320.00	11338.03	10128.96	49399.59
4	Eastern	21122.88	190.00	17.20	21330.08	0.00	3882.12	356.42	25568.62
5	N. Eastern	60.00	787.00	142.74	989.74	0.00	1116.00	223.60	2329.34
6	Islands	0.00	0.00	70.02	70.02	0.00	0.00	6.10	76.12
7	All India	99503.38	17706.35	1199.75	118409.48	4780.00	38206.40	20162.24	181558.12

Captive Genrating capacity connected to the Grid (MW) = 19509

RES -Renewable Energy Sources includes Small Hydro Project(SHP), Biomass Gas(BG), Biomass Power(BP), Urban & Industrial waste Power(U&I), and Wind Energy.

As per the procedure for renewal of the crediting period, the baseline has been updated and the latest data available for the period 2008-09 to 2010-11 has been used for estimation of the baseline emissions. CEA (Central Electricity Authority) under Ministry of Power, India has estimated the Build Margin and Simple Operating Margin for the NEWNE Grid, details of which are available on the following website and are detailed below as well:

http://www.cea.nic.in/reports/planning/cdm_co2/database_7.zip

Version 7.0 of the baseline CO2 database has been used.

CENTRAL ELECTRICITY AUTHORITY: CO2 BASELINE DATABASE

VERSION	**7.0**
DATE	**Jan-12**
BASELINE METHODOLOGY	**ACM0002 / Ver 12.2.0 and "Tool to Calculate the Emission Factor for an Electricity System", Version 2.2.1**

EMISSION FACTORS

Weighted Average Emission Rate (tCO2/MWh) (excl. Imports)

	2006-07	2007-08	2008-09	2009-10	2010-11
NEWNE	0.83	0.82	0.84	0.83	0.81
South	0.72	0.72	0.75	0.75	0.74
India	0.80	0.80	0.82	0.81	0.79

Weighted Average Emission Rate (tCO2/MWh) (incl. Imports) (2)

	2006-07	2007-08	2008-09	2009-10	2010-11
NEWNE	0.82	0.81	0.83	0.82	0.80
South	0.72	0.72	0.76	0.75	0.75
India	0.80	0.79	0.81	0.81	0.79

Simple Operating Margin (tCO2/MWh) (excl. Imports) (1)

	2006-07	2007-08	2008-09	2009-10	2010-11
NEWNE	1.02	1.01	1.02	0.99	0.98
South	1.00	0.99	0.97	0.94	0.94
India	1.01	1.01	1.01	0.98	0.97

Simple Operating Margin (tCO2/MWh) (incl. Imports) (1) (2)

	2006-07	2007-08	2008-09	2009-10	2010-11
NEWNE	1.01	1.00	1.01	0.98	0.97
South	1.00	0.99	0.97	0.94	0.94
India	1.01	1.00	1.00	0.97	0.96

Build Margin (tCO2/MWh) (excl. Imports)

	2006-07	2007-08	2008-09	2009-10	2010-11
NEWNE	0.63	0.60	0.68	0.81	0.86
South	0.70	0.71	0.82	0.76	0.73
India	0.65	0.63	0.71	0.80	0.83

Build Margin (tCO2/MWh) (not adjusted for imports)

	2006-07	2007-08	2008-09	2009-10	2010-11
NEWNE	0.63	0.60	0.68	0.81	0.86
South	0.70	0.71	0.82	0.76	0.73
India	0.65	0.63	0.71	0.80	0.83

Combined Margin (tCO2/MWh) (excl. Imports) (1)

	2006-07	2007-08	2008-09	2009-10	2010-11
NEWNE	0.82	0.81	0.85	0.90	0.92
South	0.85	0.85	0.89	0.85	0.84
India	0.83	0.82	0.86	0.89	0.90

(1) Operating margin is based on the data for the same year. This corresponds to the *ex post option* given in "Tool to Calculate the Emission Factor for an Electricity System", Ver. 2.2.1 (p.6)

Combined Margin in tCO2/MWh (incl. Imports) (1) (2)

	2006-07	2007-08	2008-09	2009-10	2010-11
NEWNE	0.82	0.80	0.84	0.90	0.91
South	0.85	0.85	0.90	0.85	0.84
India	0.83	0.81	0.85	0.88	0.90

(1) Operating margin is based on the data for the same year. This corresponds to the *ex post option* given in "Tool to Calculate the Emission Factor for an Electricity System", Ver. 2.2.1 (p.6)

(2) Adjustments for imports from other Indian grids are based on operating margin of exporting grid. For imports from other countries, an emission factor of zero is used.
See "Tool to Calculate the Emission Factor for an Electricity System", Ver. 2.2.1 (p.4), option b

GENERATION DATA

Gross Generation Total (GWh)

	2006-07	2007-08	2008-09	2009-10	2010-11
NEWNE	499,380	531,539	548,956	586,311	622,447
South	161,897	167,379	167,587	180,638	185,257
India	661,277	698,918	716,543	766,950	807,704

Net Generation Total (GWh)

	2006-07	2007-08	2008-09	2009-10	2010-11
NEWNE	465,361	496,119	510,693	544,915	579,181
South	152,206	157,247	157,336	169,765	173,925
India	617,567	653,366	668,029	714,680	753,106

Share of Must-Run (Hydro/Nuclear) (% of Net Generation)

	2006-07	2007-08	2008-09	2009-10	2010-11
NEWNE	18.5%	19.0%	17.4%	15.9%	17.6%
South	28.3%	27.1%	22.8%	20.6%	21.0%
India	20.9%	21.0%	18.7%	17.1%	18.4%

Net Generation in Operating Margin (GWh)

	2006-07	2007-08	2008-09	2009-10	2010-11
NEWNE	379,471	401,642	421,803	458,043	476,987
South	109,116	114,634	121,471	134,717	137,387
India	488,587	516,275	543,274	592,760	614,374

20% of Net Generation (GWh)

	2006-07	2007-08	2008-09	2009-10	2010-11
NEWNE	93,072	99,224	102,139	108,983	115,836
South	30,441	31,449	31,467	33,953	34,785
India	123,513	130,673	133,606	142,936	150,621

Net Generation in Build Margin (GWh)

	2006-07	2007-08	2008-09	2009-10	2010-11
NEWNE	93,524	100,707	102,589	109,064	117,779
South	30,442	31,613	31,606	36,100	35,268
India	123,965	132,320	134,195	145,164	153,047

EMISSION DATA

Absolute Emissions Total (tCO2)

	2006-07	2007-08	2008-09	2009-10	2010-11
NEWNE	385,692,794	406,861,785	430,502,442	453,067,520	468,438,871
South	109,020,456	113,586,133	117,880,640	126,786,215	129,093,636
India	494,713,250	520,447,919	548,383,082	579,853,735	597,532,507

Absolute Emissions OM (tCO2)

	2006-07	2007-08	2008-09	2009-10	2010-11
NEWNE	385,692,794	406,861,785	430,502,442	453,067,520	468,438,871
South	109,020,456	113,586,133	117,880,640	126,786,215	129,093,636
India	494,713,250	520,447,919	548,383,082	579,853,735	597,532,507

Absolute Emissions BM (tCO2)

	2006-07	2007-08	2008-09	2009-10	2010-11
NEWNE	59,042,467	60,193,616	69,297,387	88,593,337	101,146,601
South	21,348,182	22,550,310	25,851,338	27,558,555	25,882,886
India	80,390,649	82,743,926	95,148,726	116,151,892	127,029,488

IMPORT DATA

Net Imports (GWh) - Net exporting grids are set to zero

	2006-07	2007-08	2008-09	2009-10	2010-11
NEWNE	5,126	8,193	0	4,284	0
South	0	0	6,326	1,057	7,689

Share of Net Imports (% of Net Generation)

	2006-07	2007-08	2008-09	2009-10	2010-11
NEWNE	1.1%	1.7%	0.0%	0.8%	0.0%
South	0.0%	0.0%	4.0%	0.6%	4.4%

Annex 4

MONITORING INFORMATION

The Operation & Maintenance of the project will be done by Suzlon Energy Limited. As per the monitoring plan, the electricity exported to the grid through the project activity and the electricity imported from the JVVNL grid will be monitored.

Measurement of Energy and Metering:

- Since there are power producers other that the project proponent injecting electricity produced by them using the common evacuation / injection system and through the common metering equipment, Suzlon Energy Limited has been identified `as the common agency responsible for joint metering.

- The joint meter reading taken at the common evacuation / injection system is supported by controller readings of individual power producers using the common evacuation / injection system.

- WTG controller meter does not require calibration due to the following reason: "The Controller is a micro processor based intelligent device which has been specially designed for the control of wind turbines. It uses a Woodward Multi function Reply that has three current inputs from CT and three direct voltage inputs (690 Volts). The analog values of current /voltage are converted to digital signal internally using AD convertors at very high sampling rates. A software program reads these values and displays instantaneous parameters such as voltage, current, power factor, kVAh, kVArh and kWh. These instantaneous values are then time integrated and displayed/stored. Woodward rely does not have a display and needs special protocol to view energy readings as this rely communicates digital signal through special communication protocol hence; it is not possible to calibrate. Moreover, turbine cannot run without this relay hence it cannot be removed for calibration during operation"

- Based on this breakup, limited to the total energy injection, net electricity exported by the project proponent is calculated as mentioned below.

$$\boldsymbol{EJ_{PJ,y} = (Export - Import)\ X\ (1 + \%\ transmission\ loss)}$$

Where,

$$\boldsymbol{Export = \left(\frac{E_{Exp,feeder,i}}{E_{Gen,feeder,i}}\ X\ E_{WTG,i}\right) - \left(\left(\left(\sum E_{Exp,feeder,i}\right) - E_{Exp,sub-station}\right) \div \sum E_{Gen,feeder,i}\right) \times E_{WTG,i}}$$

$$\boldsymbol{Import} = \left(\frac{\boldsymbol{E_{Imp,feeder,i}}}{\boldsymbol{E_{Gen,feeder,i}}}\ \boldsymbol{X}\ \boldsymbol{E_{WTG,i}}\right) - \left(\left(\left(\sum \boldsymbol{E_{Imp,feeder,i}}\right) - \boldsymbol{E_{Imp,sub-station}}\right) \div \sum \boldsymbol{E_{Gen,feeder,i}}\right) \times \boldsymbol{E_{WTG,i}}$$

Transmission losses are a standard value provided in the Annex B of the PPA and is directly used during the monthly invoicing.
As per the clause 6.2(ii) of PPA, The Cluster Meters are calibrated once a year.

A schematic diagram indicating the metering system is provided below:

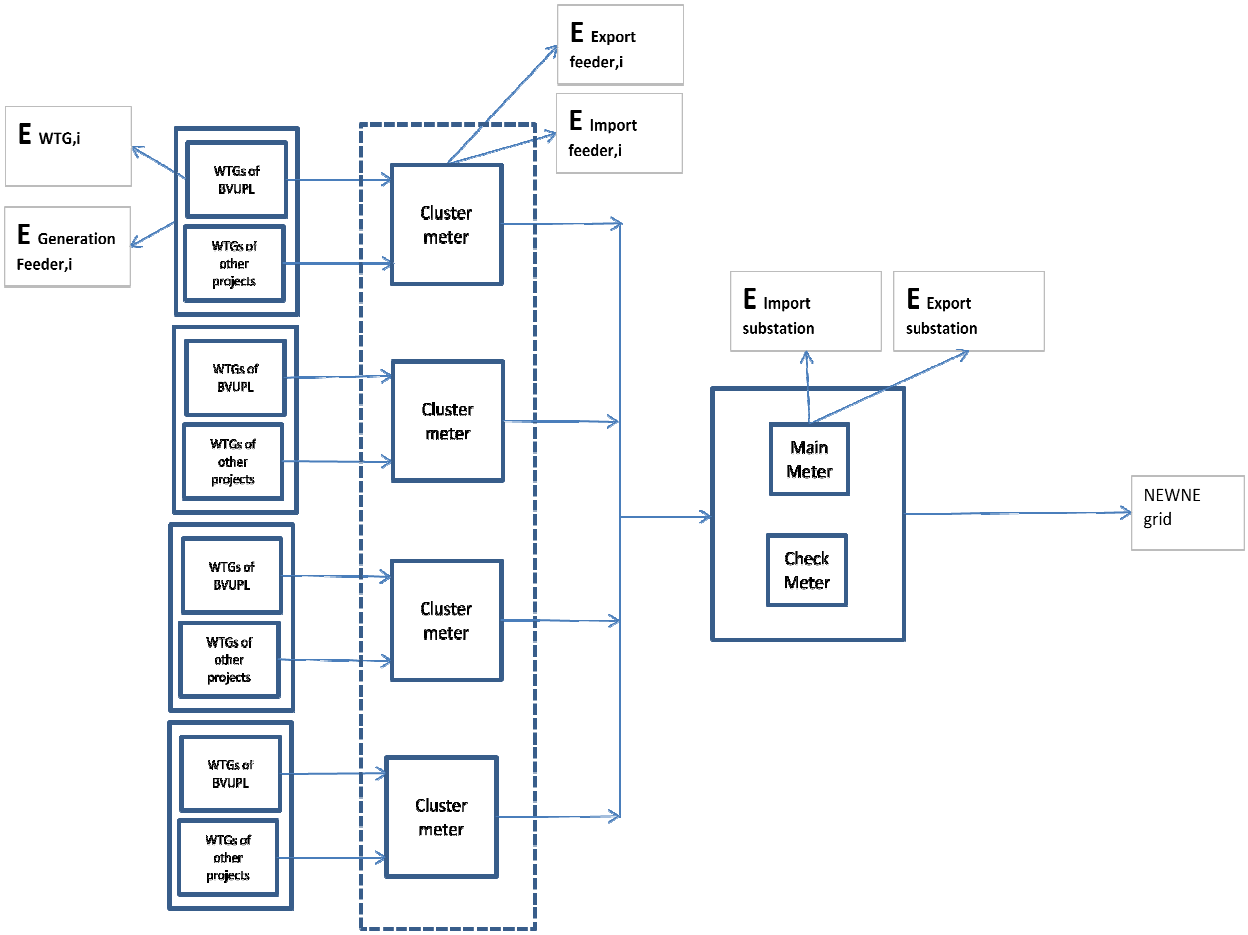

Monitoring plan for 2% CER revenues:
The project proponent will contribute 2% of net revenue realised from sale of CERs towards sustainable development initiatives. The details of such expenditure made would be included in the monitoring report for the period following the transaction and the format is as follows:

Action Plan for expenditure incurred through 2% of CER revenues									
Financial Year (A)	**Activity (B)**	**Issued CERs (C)**	**CER Price (D)**	**Total CDM Amount (E=CxD)**	**Expenditure in Current year (F)**	**Expenditure Carried forward (G)**	**Net Expenditure for Current Year (H = F+G)**	**Expenditure as % of CDM amount for current year (I = H/E)**	**Reference Documentation (J)**
Indicates the year for which the assessment is being provided	*Provides details of the social/ community activities on which the expenditure has been incurred*	*Quantity of CERs issued for the assessment year*	*CER price at which the transaction has happened*	*Total amount CDM amount received*	*Expenditure made on the social/ community development activity in the current assessment year*	*Additional expenditure incurred on capital goods in the previous assessment years being carried forward to the current assessment yea*	*Net Expenditure on social/ community development activity for the current year*	*Indicates the % of the total CDM amount spent on social/community development activity*	*Indicates the documentation to be provided to the DOE during the verification to evidence the amount spent on social/community development activity*

- - - -