URI II HYDROELECTRIC PROJECT

Document Prepared By: NHPC Limited

Project Title	**Uri II Hydroelectric Project**
Version	4.0
Date of Issue	15-Jul-2015
Prepared By	NHPC Limited
Contact	**NHPC Limited** **Registered Office Address :** N.H.P.C Office Complex, Sector-33, Faridabad – 121003, Haryana, India **NHPC Website :** http://www.nhpcindia.com **E-Mail :** webmaster@nhpc.nic.in **FAX :** 0129-2271405, **EPABX NO :** 0129-2278421

Table of Contents

1 Project Details 3
1.1 Summary Description of the Project 3
1.2 Sectoral Scope and Project Type 3
1.3 Project Proponent 3
1.4 Other Entities Involved in the Project 4
1.5 Project Start Date 4
1.6 Project Crediting Period 4
1.7 Project Scale and Estimated GHG Emission Reductions or Removals 4
1.8 Description of the Project Activity 5
1.9 Project Location 10
1.10 Conditions Prior to Project Initiation 11
1.11 Compliance with Laws, Statutes and Other Regulatory Frameworks 11
1.12 Ownership and Other Programs 12
1.12.1 Right of Use 12
1.12.2 Emissions Trading Programs and Other Binding Limits 12
1.12.3 Other Forms of Environmental Credit 12
1.12.4 Participation under Other GHG Programs 12
1.12.5 Projects Rejected by Other GHG Programs 12
1.13 Additional Information Relevant to the Project 12
2 Application of Methodology 13
2.1 Title and Reference of Methodology 13
2.2 Applicability of Methodology 14
2.3 Project Boundary 17
2.4 Baseline Scenario 18
2.5 Additionality 18
2.6 Methodology Deviations 25
3 Quantification of GHG Emission Reductions and Removals 26
3.1 Baseline Emissions 26
3.2 Project Emissions 33
3.3 Leakage 34
3.4 Net GHG Emission Reductions and Removals 34
4 Monitoring 35
4.1 Data and Parameters Available at Validation 35
4.2 Data and Parameters Monitored 36
4.3 Monitoring Plan 40
5 Environmental Impact 42
6 Stakeholder Comments 42
APPENDIX X: CO_2 database of CEA 44

1 PROJECT DETAILS

1.1 Summary Description of the Project

The Uri II Hydroelectric Project is Greenfield Hydro Power Project located on river Jhelum near village Uri, district Baramullah of J&K state of India. It is a run of the river scheme with a concrete gravity dam, an underground power house and 8.95 km long water conductor system. A maximum gross head of 130 m is proposed to be utilised to generate 1083.31 MU with installation of 4 Turbines of 60 MW each.

The purpose of the project activity is to generate electrical power using hydel energy, through the operation of run of the river hydro turbines. The hydel energy generated from the hydel power plant is evacuated to the State Grid System which is part of NEWNE Grid.

Generating power through hydel plant is a clean technology as no Carbon intensive fossil fuel is burnt during the process. A hydel turbine produces power by harnessing the available potential energy. Thus, there are no GHG emissions associated with the functioning of the hydro turbines. This in result replaces anthropogenic emissions of greenhouse gases (GHG's) estimated to be approximately 1,048,427 tCO2e per year, thereon displacing 1,083,310 MWh/year amount of electricity from the gird.

In the Pre- project scenario the entire electricity, delivered to the grid by the project activity, would have otherwise been generated by the operation of grid-connected power plants and by the addition of new generation sources.

1.2 Sectoral Scope and Project Type

The project activity falls under the following Sectoral scope and Project Type:

Sectoral Scope : 01 - Energy industries (renewable / non renewable sources)
Project Type : I - Renewable Energy Projects

Methodology:

ACM0002: Grid-connected electricity generation from renewable sources --- Version 16.0

http://cdm.unfccc.int/methodologies/DB/EY2CL7RTEHRC9V6YQHLAR6MJ6VEU83

PP hereby confirms that the project is an individual project and not a grouped project.

1.3 Project Proponent

Organization name	NHPC Limited
Contact person	Mr. R. K. Gupta
Title	Executive Director, R&D Division

Address	NHPC Limited, NHPC Office Complex, Sector 33, Faridabad - 121003, Haryana, India
Telephone	+91-129-2271405
Email	

1.4 Other Entities Involved in the Project

Organization name	EKI Energy Services Limited
Role in the project	VCS Consultant
Contact person	Mr. Manish Dabkara
Title	Director & CEO
Address	325, Block C, Prem Trade Centre, Maharani Road, Indore – 452007, Madhya Pradesh, India
Telephone	+91 731 42 89 086
Email	manish@enkingint.org

1.5 Project Start Date

Project Start Date: 25-Sep-2013;
The project start date is the earliest commissioning date amongst all the Four Hydro Turbine Units which are part of this Large Scale Hydro power project.

Project Name	Unit No.	Turbine Capacity	Location	Commissioning Date
Uri II Hydroelectric Project	I	60 MW	Uri, Baramullah, J&K	25-Sep-13
	II	60 MW	Uri, Baramullah, J&K	25-Nov-13
	III	60 MW	Uri, Baramullah, J&K	27-Sep-13
	IV	60 MW	Uri, Baramullah, J&K	2-Feb-14

1.6 Project Crediting Period

Crediting Period Start date: 25-Sep-2013

- Estimated life time of the project: 35 years

The project activity adopts renewable crediting period with the first crediting period of 10 years and with an option to renew twice, considering the lifetime of the project activity to be more than 35 years.

1.7 Project Scale and Estimated GHG Emission Reductions or Removals

Project Scale	
Project	

Large project	√

Year	Estimated GHG emission reductions or removals (tCO_2e)
Year 1	1,048,427
Year 2	1,048,427
Year 3	1,048,427
Year 4	1,048,427
Year 5	1,048,427
Year 6	1,048,427
Year 7	1,048,427
Year 8	1,048,427
Year 9	1,048,427
Year 10	1,048,427
Total estimated ERs	**10,484,270**
Total number of crediting years	10 years
Average annual ERs	1,048,427

1.8 Description of the Project Activity

Uri-II power station (4 X 60MW) is a run-of-the-river scheme, located in Uri Tehsil of Baramulla District. The nearest railhead is Jammu, which is, connected to the Project site via Srinagar and Baramulla by NH 1A (about 400 Km). The Power station, rests immediately downstream of Uri-I power station picks up its tail water to make use of the gross head of about 130m available in the course of the river between Uri-I tailrace outlet and a place located about 1.25 km downstream of the confluence of Goalta Nallah and Jhelum River, close to the Line of Actual Control (LAC). The power station is designed to generate 1083.31 MUs in a 90% dependable year.

Salient Features:

Table 1. 1. Salient Features of the Uri - II Hydroelectric Power Project.

LOCATION	
STATE	JAMMU & KASHMIR
District	Baramulla
River	Jhelum
Latitude	34° 5' 34" N to 34° 6' 27" N
Longitude	73° 56' 23" E to 74° 1' 52" E
Location of Dam & Power House	Dam -1km U/S of Dachhi Bridge. Power House at Rocky knob near Sadwanian village
Nearest Highway	NH1A
Nearest Rail head	Jammu
Nearest Airport	Srinagar
HYDROLOGY	
Catchment area at diversion site	13,400 km^2
Design Flood (PMF)	4850 m^3/sec
DIVERSION TUNNEL	
No., Diameter & Shape	1 no., 8.8 m, Horse-shoe shaped
Length	340 m
Diversion Discharge	825 m^3 /sec (1 in 25 years non monsoon)
Invert level at entry	EL. 1205.0 m
Invert level at exit	EL. 1202.0 m
Diversion Tunnel Gate	2 No. Vertical lift gate
Size of Gate	3.65 m x 9.2 m
Gate Operating platform level	EL 1228 m
COFFER DAMS	
Type	Rock fill with central clay core
Top of upstream coffer dam	EL 1228.0 m
Top of downstream coffer dam	EL 1212.0 m
DAM	
Type	Concrete gravity Dam
Dam Top	EL. 1242.0 m
FRL	EL 1241.0 m
Deepest Foundation Level	EL 1190.0 m
Maximum Dam height	

(above deepest foundation level)	52 m
Length of Dam at Top	173.2 m

SPILLWAY

Location	Centre
Type	Orifice type with breast wall
Width of spillway	60 m
No. of bays	4
Crest level of spillway	EL 1217.0 m
Width of each bay	9.0 m
Gates (Radial)	4 Nos., 9.0 m x 12 m
Energy Dissipation Arrangement	Ski-jump bucket with plunge pool
Spillway Capacity	4850 m^3/sec

RESERVOIR

Full Reservoir Level (FRL)	EL. 1241.0 m
Gross storage at FRL	634.31 ha-m

HEAD REGULATOR

Number	One
Invert level	EL 1235.0 m
Gates	2 Nos.
Size of each Gate	12.5 m x 6.5 m
Total Width	33.0 m
Trash Rack	Steel Trash Racks with Raking Machine

OPEN CHANNEL

Number	One
Shape & type	Trapezoidal , concrete lined, base width 11 m
Full supply depth	6 m
Design discharge	270.0 m^3 /sec
Length	540m

DESILTING ARRANGEMENT

No., size of desilting basin	1 No., trapezoidal 300m long
Design Discharge	270.0 m^3 /sec

SILT FLUSHING TUNNEL

No. & length	1 No., 133 m
Size & shape	3.0 m x 5.0 m, D-shaped
No. of gates in tunnel (radial gate)	1 set
Size of gates	3.0 m x 5.0 m
Sill elevation	EL. 1219.65 m

INTAKE

Number	One
No. of bay, size	3, 4.0 x 19.0
Invert level	EL. 1222.0 m
Trash Rack	Steel Trash Rack

HEADRACE TUNNEL

Size & type	8.4 m - Horse - shoe shaped, concrete lined
Design discharge	225 m^3/sec
Velocity	3.8 m/sec
Length	4275 m
Bed Slope	0.77%

SURGE SHAFT

No. & type	1 no. open to Surface with Restricted Orifice
Vertical Shaft height	77.6 m
Gate Opening Size	5mx7m
Top Level	EL 1275.0 m
Bottom Level	EL 1197.4 m

PRESSURE SHAFT / PENSTOCK

No. & Type	2 nos. underground circular steel lined
Diameter from surge shaft to branching	5.0 m (internal)
Length from surge shaft to MIV	175.0 m
Manifold diameter, No.	3.5 m, 4 nos.
Length from MIV to PH	27.5 m each

MIV GALLERY

Size	97.0 m x 8.0 m x 13.0 m
Number of valve	4
Size & Type of Valve	3.5 m diameter, Butterfly valve

POWER HOUSE COMPLEX

Type	Underground
Installed capacity	240 MW (4 x 60 MW)
Type of Turbine	Vertical Francis
Turbine Axis Elevation	EL 1095 m
Power House Cavern	132.0 m x 15.0 m x 41.0 m
Transformer Cavern including GIS area	157.5 m x 14.0 m x 13.0 m
Gross Head	130 m
Net Operating Head	118 m
Design Discharge	56.25 m^3/sec
Nos. of Draft Tube	4
Draft Tube Gate	6.5 m x 6.5 m

D/S SURGE ARRANGEMENTS

Surge Shaft	6.5mx 4.7m
Surge Galleries	10m D-Shaped, 616m & 250m long

TAILRACE TUNNEL

Size &type	8.4 m - Horse -shoe shaped, concrete lined
Design discharge	225 m^3/sec
Velocity	3.8 m /sec
Length	3775 m
Normal TWL	EL 1111 m

OUTLET STRUCTURE

Crest level	EL 1107 m
Length of cut & cover	110 m

POTHEAD YARD

Type	outdoor
Size	20m x 60m
Elevation	EL 1200 m

POWER GENERATION

Installed capacity	4 X 60 MW
Annual Energy Generation in 90 % dependable year	1083.3 MU

Estimated life time of the project:	35 years

Layout Plan:

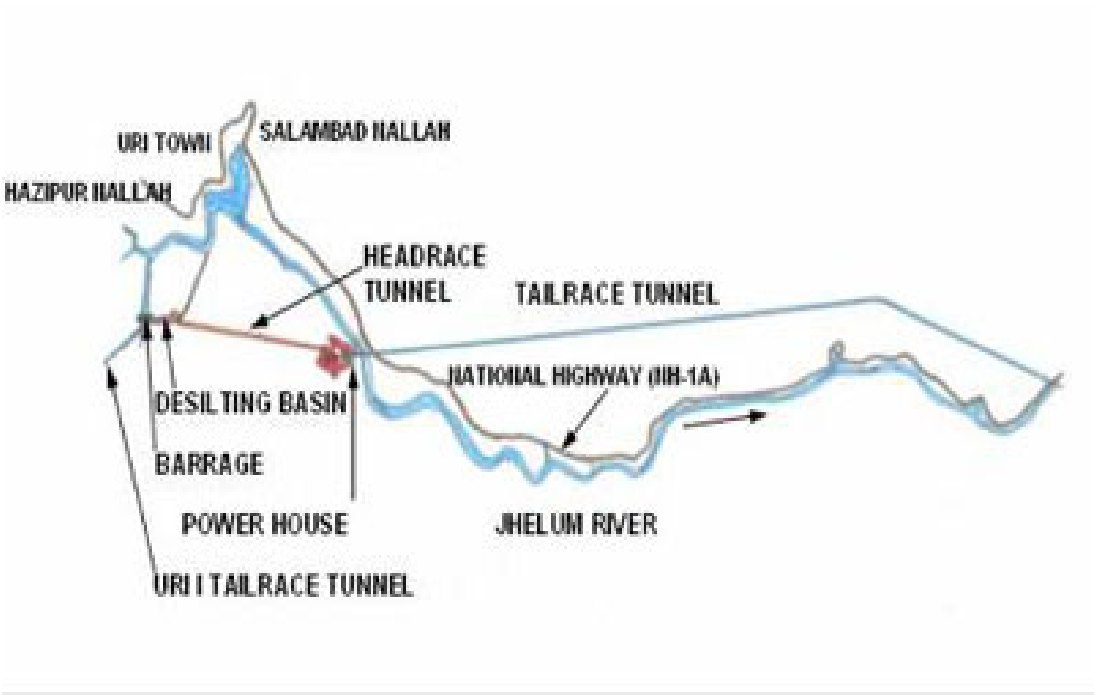

The project shall result in replacing anthropogenic emissions of greenhouse gases (GHG's) estimated to be approximately 1,048,427 tCO2e per year, thereon displacing 1,083,310 MWh/year amount of electricity from the gird.

1.9 Project Location

The Uri-II hydroelectric project is installed across Jhelum River near Uri village in Uri Tehsil of Baramulla district of Jammu and Kashmir. The geographical co-ordinates of the project activity are Latitude: 34° 8' 39.0474", Longitude= 74° 11' 8.6634". The map below shows the exact location of the project activity:

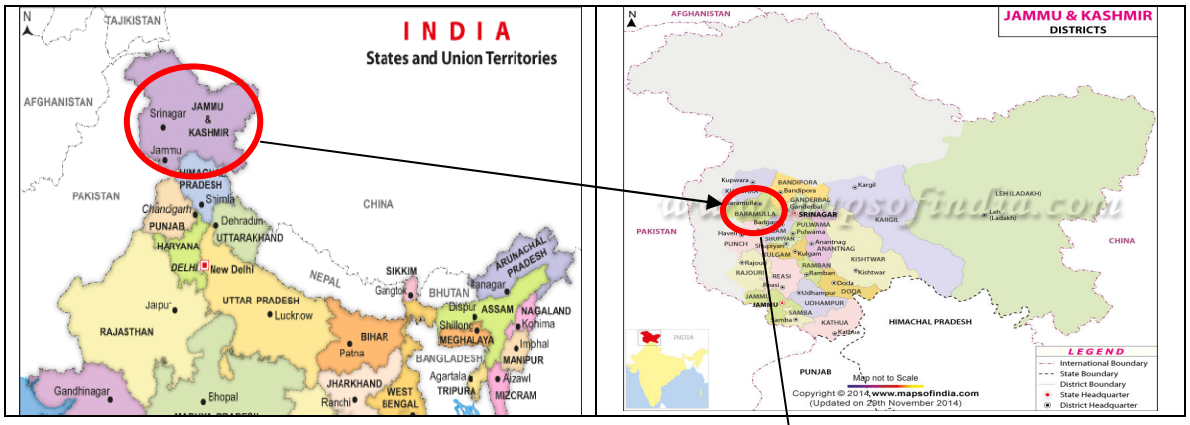

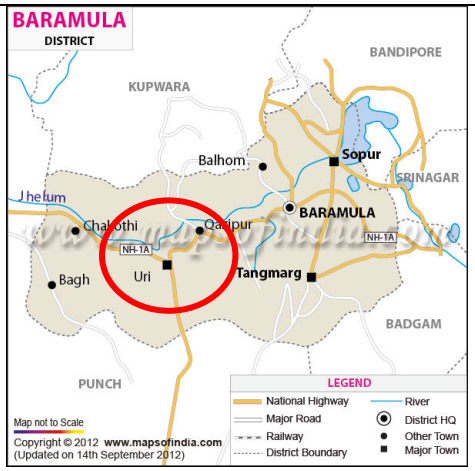

1.10 Conditions Prior to Project Initiation

The pre project scenario is same as baseline scenario. Please refer section 2.4 for the description of baseline scenario.

1.11 Compliance with Laws, Statutes and Other Regulatory Frameworks

Project complies with all relevant local, regional and national laws, statutes and regulatory frameworks; same is evident from various required clearances and/or approvals received for development of the project as given below:

Approval Name	Approval date	Law under which applicable
CCEA Clearance	01-Sep-2005	Electricity (Supply) Act, 1948
Environmental Clearance	13-Aug-2004	Environmental Impact Assessment Notification, 1994
Forest Clearance (in case Forest Land used)	No forest land is required for the project. NOC issued by State Government vide letter dated 29.07.2003	Forest (Conservation) Act, 1980
Pollution Control Board	03-Jul-2014	Water (Prevention & Control of Pollution) Act, 1974 & Air (Prevention & Control of Pollution) Act, 1981

1.12 Ownership and Other Programs

1.12.1 Right of Use

The ownership of the Project and its right to use is completely entrusted to NHPC Limited which can be verified by the following evidences:

- Power Purchase Agreement
- Environmental Clearance

1.12.2 Emissions Trading Programs and Other Binding Limits

Net GHG emission reductions or removals generated by the Project will not be used for compliance with an emissions trading program or to meet binding limits on GHG emissions of NHPC Limited.

1.12.3 Other Forms of Environmental Credit

The Project has no intend to generate any other form of GHG-related environmental credit for GHG emission reductions or removals claimed under the VCS Program.

1.12.4 Participation under Other GHG Programs

The Project has not participated in any other GHG programs.

1.12.5 Projects Rejected by Other GHG Programs

The Project is not rejected by other GHG programs.

1.13 Additional Information Relevant to the Project

Eligibility Criteria

This is not a grouped project activity. Thus, this section is not applicable for this project

Leakage Management

Not applicable to the project activity.

Commercially Sensitive Information

No commercially sensitive information has been excluded from the public version of the project description

Further Information

Legislative:

The project participants obtained all clearances from stakeholders hence no legal risks are anticipated.

Socio-economic well being:

- Project activity has generated direct and indirect employment for skilled and unskilled manpower during construction phase as well as during operational stage and thus helped in controlling migration from the region and alleviation of poverty.
- The project activity's contribution of power supply towards the NEWNE grid is helping in the upliftment of the social life of the people by ensuring a sustainable and reliable source of power for the region.
- The Project activity has improved the infrastructural facilities like water availability, road, and medical facilities etc in the region.

Environmental well being:

- The project activity generates clean and green power thus causing negligible emissions of green house gases. By building and operating the Hydro power project, much pollution is avoided. In the absence of the project activity, equivalent power would have been generated based on the fossil fuels resulting in more Green House Gas emissions into the atmosphere.
- The project activity has reduced the dependence on fossil fuels for power generation thus conserving the natural reserves. The project has lead to green house gas emission reduction and hence contributed in mitigating climate change.

Technological well being:

The project activity has increased awareness and interest among the private players to make investments in similar areas. The technology employed in the project activity is safe and sound.

2 APPLICATION OF METHODOLOGY

2.1 Title and Reference of Methodology

Methodology:
ACM0002: Grid-connected electricity generation from renewable sources --- Version 16.0, Sectoral Scope: 01, EB 81, Annex 9

https://cdm.unfccc.int/methodologies/DB/EY2CL7RTEHRC9V6YQHLAR6MJ6VEU83

The project activity also takes reference from following Tools from the tools prescribed by applied methodology:

1. Tool for the demonstration and assessment of additionality --- Version 07.0.0, EB 70, Annex 8
https://cdm.unfccc.int/methodologies/PAmethodologies/tools/am-tool-01-v7.0.0.pdf

2. Tool to calculate the emission factor for an electricity system --- Version 04.0, EB 75, Annex 15
https://cdm.unfccc.int/methodologies/PAmethodologies/tools/am-tool-07-v4.0.pdf

2.2 Applicability of Methodology

The following steps will show the applicability of the project under this methodology.

Applicability Criterion (with Para number reference)	Project Case
1. This methodology is applicable to grid-connected renewable energy power generation project activities that: a. Install a Greenfield power plant; b. Involve a capacity addition to (an) existing plant(s); c. Involve a retrofit of (an) existing operating plants/units; d. Involve a rehabilitation of (an) existing plant(s)/unit(s);or e. (e) Involve a replacement of (an) existing plant(s)/unit(s).	The Project activity is Greenfield Hydro Power Project. Hence the project activity satisfies this applicability criterion of the methodology
2. The methodology is applicable under the following conditions: a. The project activity may include renewable energy power plant/unit of one of the following types: hydro power plant/unit with or without reservoir, wind power plant/unit, geothermal power plant/unit, solar power plant/unit, wave power plant/unit or tidal power plant/unit; b. In the case of capacity additions, retrofits, rehabilitations or replacements (except for wind, solar, wave or tidal power capacity addition projects the existing plant/unit started commercial operation prior to the start of a minimum historical reference period of five years, used for the calculation of baseline emissions and defined in the baseline emission section, and no capacity expansion, retrofit, or rehabilitation of the plant/unit has been	The Project activity is generation of electricity through Hydro Power Plant which is renewable energy power plant. Hence the project activity satisfies this applicability criterion of the methodology

undertaken between the start of this minimum historical reference period and the implementation of the project activity.	
3. In case of hydro power plants, one of the following conditions shall apply: a. The project activity is implemented in existing single or multiple reservoirs, with no change in the volume of any of the reservoirs; or b. The project activity is implemented in existing single or multiple reservoirs, where the volume of the reservoir(s) is increased and the power density calculated using equation (3), is greater than 4 W/m2; or c. The project activity results in new single or multiple reservoirs and the power density, calculated using equation (3), is greater than 4 W/m2; or d. The project activity is an integrated hydro power project involving multiple reservoirs, where the power density for any of the reservoirs, calculated using equation (3),is lower than or equal to 4 W/m2, all of the following conditions shall apply: (i) The power density calculated using the total installed capacity of the integrated project, as per equation (4),is greater than 4 W/m2; (ii) Water flow between reservoirs is not used by any other hydropower unit which is not a part of the project activity; (iii) Installed capacity of the power plant(s) with power density lower than or equal to 4 W/m2 shall be: a. Lower than or equal to 15 MW; and b. Less than 10 per cent of the total installed capacity of integrated hydro power project.	The project activity is constructed as a run-of-the-river hydropower project with limited pondage and the power density calculated using equation (3), is greater than 4 W/m2 Hence, point 3. c. is applicable for the project case. i.e. The project activity results in new single or multiple reservoirs and the power density, calculated using equation (3), is greater than 4 W/m2 Area of Reservoir = 6343100 m² Installed Capacity of Hydro Power Project = 240000000 W **Power Density = 37.84 W/m2**
4. In the case of integrated hydro power projects, project proponent shall: • Demonstrate that water flow from upstream power plants/units spill directly to the downstream reservoir and that collectively constitute to the generation capacity of the integrated hydro power project; or • Provide an analysis of the water balance covering the water fed to power units, with all possible combinations of reservoirs and without the construction of reservoirs. The purpose of water balance is to demonstrate the requirement of specific combination of reservoirs constructed under CDM project activity for the optimization of power	The project activity is constructed as a run-of-the-river hydropower project with limited pondage. Therefore, the said criteria is not applicable

output. This demonstration has to be carried out in the specific scenario of water availability in different seasons to optimize the water flow at the inlet of power units. Therefore this water balance will take into account seasonal flows from river, tributaries (if any), and rainfall for minimum five years prior to implementation of CDM project activity.	
5. The methodology is not applicable to: • Project activities that involve switching from fossil fuels to renewable energy sources at the site of the project activity, since in this case the baseline may be the continued use of fossil fuels at the site; • Biomass fired power plants/units.	The proposed project activity is the installation of a Hydro power plant. Therefore, the said criteria is not applicable
6. In the case of retrofits, rehabilitations, replacements, or capacity additions, this methodology is only applicable if the most plausible baseline scenario, as a result of the identification of baseline scenario, is "the continuation of the current situation, that is to use the power generation equipment that was already in use prior to the implementation of the project activity and undertaking business as usual maintenance".	The proposed project activity is a Greenfield project, thus this criteria is not applicable.
7. In addition, the applicability conditions included in the tools referred to below apply.	The project applies the following tools and is in compliance to the same; • "Tool to calculate the emission factor for an electricity system"; • "Tool for the demonstration and assessment of additionality";

Applicability conditions of "Tool to calculate the emission factor for an electricity system"	
Applicability Criterion	**Project Case**
This tool may be applied to estimate the OM, BM and/or CM when calculating baseline emissions for a project activity that substitutes grid electricity that is where a project activity supplies electricity to a grid or a project activity that results in savings of electricity that would have been provided by the grid (e.g. demand-side energy efficiency projects).	This condition is applicable. OM, BM and CM are estimated using the tool under section 3.1 for calculating baseline emissions.
Under this tool, the emission factor for the project electricity system can be calculated either for grid power plants only or, as an option, can include off-grid power plants. In the latter case, the conditions specified in "Appendix 2: Procedures related to off-grid power generation" should be met. Namely, the total capacity of off-grid power plants (in MW) should be at least 10 per cent of the total capacity of grid power plants in the electricity system; or the total electricity generation by off-grid power plants (in MWh) should be at least 10 per cent of the total electricity generation by grid power plants in the electricity system; and that factors which negatively affect the reliability and stability of the grid are primarily due to constraints in	Since the project activity is grid connected, this condition is applicable and the emission factor has been calculated accordingly.

generation and not to other aspects such as transmission capacity.	
In case of CDM projects the tool is not applicable if the project electricity system is located partially or totally in an Annex I country.	The project activity is located in India, a non-Annex I country. Therefore, this criterion is not applicable for the project activity.
Under this tool, the value applied to the CO2 emission factor of biofuels is zero.	The project activity is a grid connected hydro power plant. Therefore, this criterion is not applicable for the project activity.

2.3 Project Boundary

As per ACM0002 version 16, for hydroelectric projects, the project boundary includes the physical site of the hydro power plant and all power plants connected physically to the electricity system that the project power plant is connected to. The project boundary consists of turbines, generators, transformers, transmission lines, metering equipment, connected grid sub-stations and NEWNE Grid.

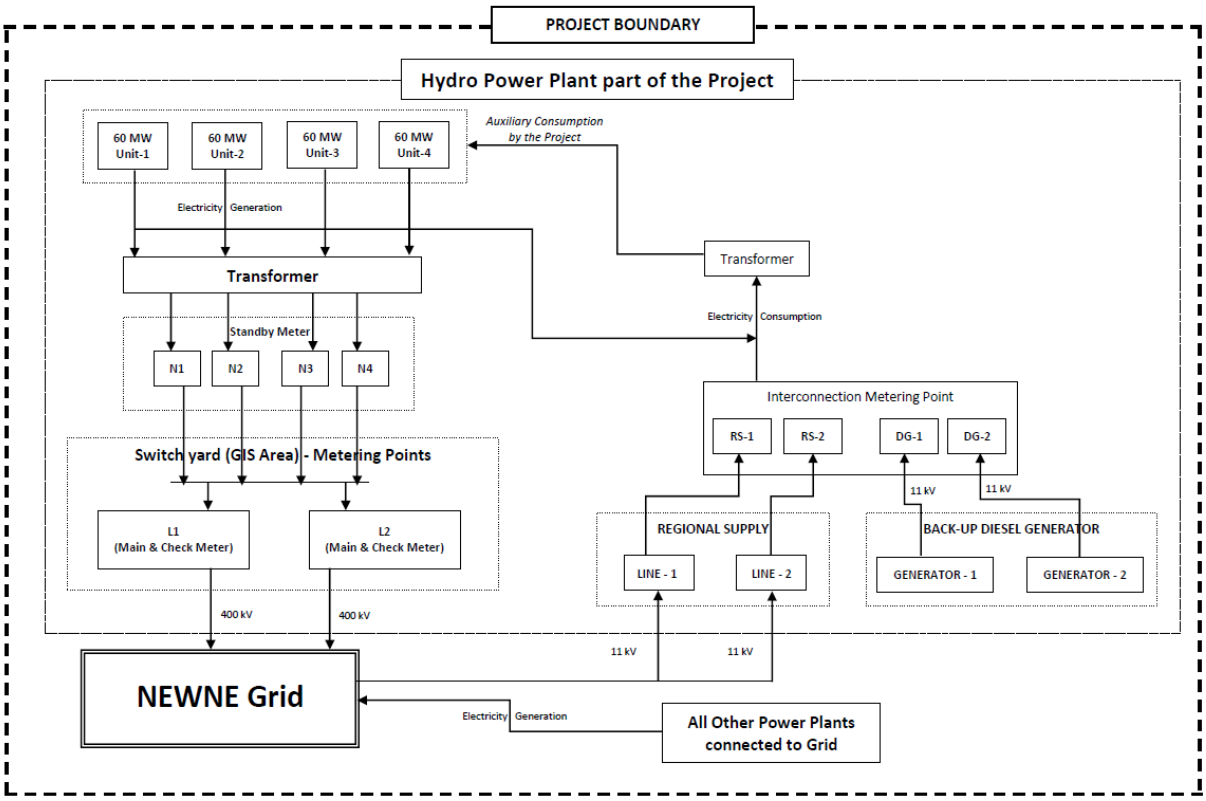

Source	Gas	Included	Justification/Explanation

Source		Gas	Included	Justification/Explanation
Baseline	CO_2 emissions from electricity generation in fossil fuel fired power plants that are displaced due to the project activity	CO_2	Yes	Major emission source
		CH_4	No	Minor emission source
		N_2O	No	Minor emission source
Project	For hydro power plants, emissions of CH_4 from the reservoir	CO_2	No	Minor emission source
		CH_4	No	The project activity is a run-of-river hydro power with limited pondage and hence no emissions
		N_2O	No	Minor emission source

2.4 Baseline Scenario

Since, the project activity is a Greenfield power plant and meets all the applicability criteria for the ACM0002 Version 16,

As per para 23 of ACM0002 version 16.0; If the project activity is the installation of a Greenfield power plant

"the baseline scenario is electricity delivered to the grid by the project activity would have otherwise been generated by the operation of grid-connected power plants and by the addition of new generation sources, as reflected in the combined margin (CM) calculations described in the "Tool to calculate the emission factor for an electricity system".

2.5 Additionality

In line with VCS Standard version 3.4, the additionality of the Project activity is ascertained in line with the applicable guidance from the UNFCCC. The demonstration of additionality for the proposed Project activity is being carried out in accordance with the additionality tool provided by the UNFCCC i.e. "Tool for demonstration and assessment of Additionality" Version 07.0.0,. The tool provides a step-wise approach to demonstrate additionality which is displayed below:

Step 0: Demonstration whether the proposed project activity is the first-of-its-kind

The proposed project activity is not the first-of-its-kind. Hence not applicable.

Step 1: Identification of alternatives to the project activity consistent with current laws and regulations

Sub-step 1a: Define alternatives to the project activity:
Identify realistic and credible alternative(s) available to the project participants or similar project developers that provide outputs or services comparable with the proposed VCS project activity.

The purpose of the project activity is to generate electrical power using hydel energy, through the operation of 4 x 60 MW hydro turbines and feed the electricity generated to the grid. Hence, the following alternatives are considered:

Alternative 1: The proposed project activity not undertaken as a VCS project activity.
The PP could proceed with the implementation of the project without Carbon credit benefits. The electricity produced from the renewable energy project would have been sold to the grid. This is in compliance with all applicable legal and regulatory requirements and can be a part of the baseline. However, the Project activity is not feasible without revenues from sale of Carbon Credits. This argument has been discussed in step 2 of the Additionality section.

Alternative 2: No proposed project activity and equivalent amount of energy would have been produced by the grid electricity system through its currently running power plants and by new capacity addition to the grid i.e. Continuation of the present situation.

The PP would have continued without investment in Project activity with usual business activities. The grid would continue with the fossil fuel based power projects and this would result in GHG emissions. Hence, the new capacity add-on from a fossil fuel based power plant is appropriate, realistic & credible baseline alternative for the project activity.

Outcome of Sub-step 1a: All the realistic alternatives for the project activity have been enlisted above.

Sub-step 1b: Consistency with mandatory laws and regulations:
The alternative(s) shall be in compliance with all applicable legal and regulatory requirements, even if these laws and regulations have objectives other than GHG reductions, e.g. to mitigate local air pollution. (This sub-step does not consider national and local policies that do not have legally-binding status.).

The relevant national laws and regulations pertaining to generation of energy in India are:

- Electricity Act 2003
- National Electricity Policy 2005
- Tariff Policy 2006

The Project activity conforms to all the applicable laws and regulations in India:

- Power generation using hydro energy is not a legal requirement or a mandatory option.

- There are state and sectoral policies, framed primarily to encourage hydro power projects. These policies have also been drafted realizing the extent of risks involved in the projects and to attract private investments.
- The Indian Electricity Act, 2003 (May 2007 Amendment) does not influence the choice of fuel used for power generation.
- There is no legal requirement on the choice of a particular technology for power generation.

Outcome of Sub-step 1b: Hence, both the alternatives enlisted above are found to comply with the mandatory laws and regulations taking into account the enforcement of the legislations in the region or country and EB decisions on national and/or sectoral policies and regulations. However, Alternative 2 has been selected as the appropriate baseline alternative for this project activity.

Step 2: Investment analysis

Determine whether the proposed project activity is economically or financially less attractive than at least one other alternative, identified in step 1, without the revenue from the sale of emission reductions credits. To conduct the investment analysis, use the following sub-steps:

Sub-step 2a: Determine appropriate analysis method

As per Tool for demonstration and assessment of Additionality; Sub-step 2a, Paragraph (1), as the project activity is selling the generated electricity & getting financial benefits other than CDM benefits hence, Option- I (Apply simple cost analysis) is not applicable under this situation. Also as per EB-62, Annex 05, clause no.19 "If the alternative to the project activity is the supply of electricity from a grid this is not to be considered an investment and a benchmark approach is considered appropriate". Hence Option-II (Apply investment comparison analysis) is also not applicable under this situation. So the project promoter has chosen Option- III or benchmark analysis as an appropriate analysis method to demonstrate the investment barrier.

This method determines the attractiveness of the project activity for the investors, as well as provides a measure of the viability of the investment to generate revenues during its operation, as compared with other avenues and investment options. Hence, the Benchmark analysis method is to be employed for analysis of the said project.

Sub-step 2b (Option III): Apply benchmark analysis

The investment analysis using Benchmark analysis approach (Option III) has been chosen. Further, this method illustrates the evaluation of the Project by the PP before the decision to undertake the project was taken and management approval granted.

Choice of Financial Indicator:

According to the "Tool for demonstration and assessment of Additionality", *the financial indicator can be based either on (1) project IRR or (2) equity IRR. There is no general preference between the approaches (1) or (2). The benchmark chosen for analysis shall be fully consistent with the choice of approach.* Therefore in accordance with the guidance, the relevant financial indicator for project activity has been chosen as Project IRR.

Choice of Benchmark:

As per para 12 of Guidelines on the assessment of the investment analysis (Annex 05, EB 62),

In cases where a benchmark approach is used the applied benchmark shall be appropriate to the type of IRR calculated. ***Local commercial lending rates*** *or weighted average costs of capital (WACC) are appropriate benchmarks for a project IRR.*

In the project activity, PP has considered the local lending rate as the benchmark for the project. These lending rates are available on the Reserve Bank of India (RBI) website and relate to the prime lending rates (PLR) of five major banks in the country.

The PLR as on 27-Aug-2005[1] is considered as the Benchmark for the project i.e. 10.50%.

[1] http://rbidocs.rbi.org.in/rdocs/Wss/PDFs/65634.pdf

Sub-step 2c: Calculation and comparison of financial indicators

The Project IRR is evaluated for the entire lifetime of the project activity, i.e. 35 years. It is calculated based on the cash outflows from and cash inflows into the project activity.

Key Assumptions supporting financial projections:

Input values are based on publicly available data sources which can be clearly validated by the DOE, thus it complies with guidance 13 of EB 62, Annex 5.

Details of the Project		Source
Generation and Sale of Electricity		
Annual Energy Generation (Mn. MWh)	1,083.31	As per DPR
Auxiliary Consumption	0.70%	As per DPR
Transformer Loss	0.50%	As per DPR
Free Power to Home State	12.00%	As per DPR
Sale price at Bus Bar for first year (INR/kWh)	4.02	As per DPR
Estimated Life of the plant (Yrs.)	35	As per DPR
Operation & Maintenance cost and Insurance		
O & M Expenses (INR Mn.)	291.91	As per DPR
Escalation in the operational expenses (%)	6.00%	As per DPR
O & M free for (Yr.)	-	As per DPR
Financial Parameters		
TOTAL COST (INR Mn.)	1,9460.93	As per DPR
Debt-Equity Ratio	70:30	As per DPR
Term Loan		
Loan Amount (INR Mn.)	1,3622.65	Calculated Value
Interest rate (%)	10.00%	As per DPR
Loan Tenure (Half Year)	24	As per DPR
Working Capital Loan		
Working Capital will cover:		
O & M expenses for 1 month		As per DPR
Billing equivalent to 2 months average		As per DPR
Interest rate (%)	9.75%	As per DPR
Book Depreciation (SLM Method)		
Salvage Value (%)	10.00%	CERC (Terms and Conditions of Tariff) Regulations 2004, Pg. 42 http://cercind.gov.in/13042007 /Terms_and_conditions_of_tariff.pdf
Land Cost (INR Mn.)	454.19	As per DPR
Book Depreciation (INR Mn.)	488.74	Calculated Value

IT Depreciation (WDV Method)		
Civil Works	3.40%	As per Income Tax Act http://www.incometaxindia.gov.in /charts%20%20tables/depreciation %20rates.htm
Electro - Mechanical Works	3.40%	
Tax rates		
Income tax rate (%)	33.66%	Calculated Value
MAT (%)	8.42%	Calculated Value
Service Tax (%)	10.20%	Calculated Value

Based on the above assumptions, the Project IRR works out to 7.60 %

The result of the analysis is as follows:

Project IRR	Benchmark
7.60%	10.50%

This substantiates that the investment is not financially attractive (Project IRR for the project activity is less than the Benchmark). Thus it can be easily concluded that project activity is additional & is not business as usual scenario.

Sub-step 2d: Sensitivity Analysis:

As per Guidance 20 and 21 of EB 62 Annex 5, the sensitivity analysis of the project parameters which may substantially influence the Project IRR is carried out to assess the robustness of the conclusion. The results of the sensitivity analysis are presented below:

Factor	% Change	Project IRR	Remarks
Generation	+10%	6.20%	This is lower than Benchmark
	-10%	8.87%	This is lower than Benchmark
	Variation required to reach benchmark	24.02%	As per the DPR prepared by third party the Generation is 1083.31 and an increase in the Generation by 31.71% over a period of 35 years consistently is highly unrealistic. Further, Generation values are a result of changes in water availability which is beyond the control of PP and/or changes in equipment availability. Moreover the actual values would be available when Actual project is in operation.
O&M cost	+10%	7.87%	This is lower than Benchmark

	-10%	7.31%	This is lower than Benchmark
	Variation required to reach benchmark	-136.01%	Highly unrealistic scenario as O&M Cost can never negative
Tariff Rate	+10%	6.20%	This is lower than Benchmark
	-10%	8.87%	This is lower than Benchmark
	Variation required to reach benchmark	24.02%	The Tariff Rate is calculated on a cost-plus approach and depends on the CERC Tariff Regulations.
Project Cost	+10%	9.01%	This is lower than Benchmark
	-10%	6.33%	This is lower than Benchmark
	Variation required to reach benchmark	-19.37%	It is quite unlikely that the project cost will decrease from the approved cost, as completion cost of the project increases due to cost over-run & time over-run over the development phase of the project. Hence, increase in project cost would only lead to decrease in returns from the project to PP.

It can be observed from above table that in various scenarios wherein there are changes in tariff, O&M cost, Electricity Generation and project's capital cost, the Project IRR does not cross the benchmark. Thus, it can be concluded that revenue from sale of VERs is important to alleviate this gap and hence the project has been considered to be additional.

Step 3: Barrier analysis

Barrier analysis has not been used.

Step 4: Common practice Analysis

Sub-step 4a: Analyze other activities similar to the proposed Project activity:

The common practice analysis is carried out step by step as per "Methodological tool: Common Practice, version 03.1" para 5. Stepwise approach for common practice are as follows:

Step (1): *calculate applicable capacity or output range as +/-50% of the total design capacity or output of the proposed project activity.*

Range	Capacity	Unit
+50%	360	MW
Capacity of the proposed project activity	240	MW
-50%	120	MW

Step (2): *identify similar projects (both CDM and non-CDM) which fulfil all of the following conditions:*

(a) *The projects are located in the applicable geographical area;*
(b) *The projects apply the same measure as the proposed project activity;*

(c) The projects use the same energy source/fuel and feedstock as the proposed project activity, if a technology switch measure is implemented by the proposed project activity;

(d) The plants in which the projects are implemented produce goods or services with comparable quality, properties and applications areas (e.g. clinker) as the proposed project plant;

(e) The capacity or output of the projects is within the applicable capacity or output range calculated in Step 1;

(f) The projects started commercial operation before the project design document (CDM-PDD) is published for global stakeholder consultation or before the start date of proposed project activity, whichever is earlier for the proposed project activity.

Identification of the similar projects (CDM and non-CDM) is carried out as per sub-steps of Step (2) as follows:

a. Project is located in host country - India. Therefore, Project is located India have been chosen for analysis.
b. The project activity is a green-field hydro power project and uses measure (b) *"Switch of technology with or without change of energy source including energy efficiency improvement as well as use of renewable energies"*.
   Therefore, all projects applying same measure (b) as the proposed project activity are candidates for similar projects.
c. The energy source used by the project activity is hydro. Hence, only hydro energy projects have been considered for analysis.
d. The project activity produces electricity; therefore, all power plants that produce electricity are candidates for similar projects.
e. The capacity range of the projects is within the applicable capacity range from 120 MW to 360 MW.
f. The start date of the project activity is 25/09/2013. As Kyoto Protocol was ratified by India on 26/08/2002[2], therefore projects, which had started commercial operation between 26/08/2002 to 25/09/2013, have been identified.

Numbers of Similar projects (CDM and non-CDM) indentified, which fulfil above-mentioned conditioned are:

Particulars	No. of Projects	Source
N_{Hydro}	14	Central Electricity Authority: CO_2 Baseline Database version 10.0

Sources: CENTRAL ELECTRICITY AUTHORITY: CO2 BASELINE DATABASE Version 10

Refer Common Practice Analysis Excel Sheet for Project Details & Analysis

[2] http://unfccc.int/kyoto_protocol/status_of_ratification/items/2613.php

Step (3): *within the projects identified in Step 2, identify those that are neither registered CDM project activities, project activities submitted for registration, nor project activities undergoing validation. Note their number N_{all}.*

All the projects identified in step-2 are neither registered nor project activities submitted for registration, or project activities undergoing validation.

Thus N_{all} = 12

Step (4): *within similar projects identified in Step 3, identify those that apply technologies that are different to the technology applied in the proposed project activity. Note their number N_{diff}.*

From the projects identified above, those projects which employ "**different technologies**" have been excluded and the number of such projects has been identified as N_{diff}.

With reference to Methodological tool: Common Practice, version 03.1 para 12 (d) (iv); Investment climate has been considered for identifying Different technologies, as each state in India has different set of policies and legal regulations. The project activity is located in the state of J&K of India and the policies and legal regulations applicable for the project is regulated by J&K Government. Therefore, it can be assumed that the policies and legal regulations are different in different states and hence projects installed in other states have been considered in Ndiff.

From the identified projects in Nall (step 3) located in states other than Jammu & Kashmir come under different investment climate and have been considered under Ndiff.

As N_{all} = 12; thus N_{diff} = 11

Step (5): *calculate factor $F=1-N_{diff}/N_{all}$ representing the share of similar projects (penetration rate of the measure/technology) using a measure/technology similar to the measure/technology used in the proposed project activity that deliver the same output or capacity as the proposed project activity.*

Calculate $F=1-N_{diff}/N_{all}$

As N_{all} =12 thus, N_{all}-N_{diff} = 1; is less than 3

Outcome of Step 5:

As,

i. F = 0.083; is less than 0.2
ii. N_{all}-N_{diff} = 1; is less than 3

Thus, the proposed project activity is not a "common practice" within a sector in the applicable geographical area.

2.6 Methodology Deviations

There is no methodology deviation

3 QUANTIFICATION OF GHG EMISSION REDUCTIONS AND REMOVALS

3.1 Baseline Emissions

Baseline emissions include only CO2 emissions from electricity generation in fossil fuel fired power plants that are displaced due to the project activity. The methodology assumes that all project electricity generation above baseline levels would have been generated by existing grid-connected power plants and the addition of new grid-connected power plants. The baseline emissions are to be calculated as follows:

$$BE_y = EG_{PJ,y} \times EF_{grid,CM,y}$$

Where:

BE_y	=	Baseline emissions in year *y* (t CO_2/yr)
$EG_{PJ,y}$	=	Quantity of net electricity generation that is produced and fed into the grid as a result of the implementation of the CDM project activity in year *y* (MWh/yr)
$EF_{grid,CM,y}$	=	Combined margin CO_2 emission factor for grid connected power generation in year *y* calculated using the latest version of the "Tool to calculate the emission factor for an electricity system" (t CO_2/MWh)

I. Calculation of $EG_{PJ,y}$

If the project activity is the installation of a Greenfield power plant, then:

$$EG_{PJ,y} = EG_{facility,y}$$

Where:

$EG_{PJ,y}$	=	Quantity of net electricity generation that is produced and fed into the grid as a result of the implementation of the CDM project activity in year *y* (MWh/yr)
$EG_{facility,y}$	=	Quantity of net electricity generation supplied by the project plant/unit to the grid in year *y* (MWh/yr)

$$EG_{PJ,y} = EG_{facility,y}$$

Net electricity generation supplied by the project plant/unit to the grid:

Net electricity generation supplied by the project plant/unit to the grid is a calculated value & will be calculated as the difference of the measured values of "Electricity exported by the project to the grid at project site switch yard" and "Electricity imported by the Project from the grid at the interconnection point of the Regional Supply"

Net electricity generated and supplied by the project plant/unit to the grid

= Electricity exported by the project to the grid at project site switch yard – Electricity imported by the project from the grid at interconnection point of the Regional Supply

Electricity exported by the project to the grid at project site switch yard :

Electricity exported by the project to the grid at project site switch yard is the Net Transmitted Units recorded and monitored by the metering system installed at the project site switch yard.

The metering system comprises of four individual special energy meters (SEMs) (acts as standby meters) installed at the power station, for each generating units. These are connected via two transmission lines of 400 kV, each having its own SEM meter (main meter and check meter). In case, anyone transmission line in not in service than complete load will be shifted to other transmission line which is in operation.

The energy meters are tri-vector meter which are installed and sealed by the Power Grid Corporation Limited in the presence of the representatives of the power producer. The energy meters have capacity of recording both import & export; however net transmitted units are recorded & monitored.

The monthly reading of electricity transmitted from the meters installed at the project site switch yard is jointly taken by the representative of the power producer and SEB official and this data is used for billing purposes.

The check meter shall be used during the period the main metering system is not in service. Further in case of failure of both main meter and check meter, sum of the net electricity generation recorded by four individual special energy meters (SEMs) and individual auxiliary meters shall be used for accounting and billing purpose.

All the SEM meters will be calibrated atleast once in 5[3] years. The accuracy class of the energy meters is 0.2 s.

The monthly Joint Meter Reading (JMR) or SEM statement report is used for the calculation of Electricity exported by the project to the grid at project site switch yard. The data would be archived electronically and maintained for the entire crediting period plus two years.

Hence,
Electricity exported by the project to the grid at project site switch yard = "Net Transmitted Units recorded by $L1_{Main\ Meter}$*" + "Net Transmitted Units recorded by* $L2_{Main\ Meter}$*"*

Where,
Net Transmitted Units recorded by $L1_{Main\ Meter}$ *= Export recorded* $L1_{Main\ Meter}$ *– Import recorded* $L1_{Main\ Meter}$
Net Transmitted Units recorded by $L2_{Main\ Meter}$ *= Export recorded* $L2_{Main\ Meter}$ *– Import recorded* $L2_{Main\ Meter}$

[3] CEA metering regulation clause 18 on page 12 of the regulation

http://www.powermin.nic.in/whats_new/pdf/Metering_Regulations.pdf

Auxiliary Consumption:

During the plant operation the electricity for auxiliary use would be internally sourced. During start-up and shut down cases there is a provision of Two Electricity Supply line from State Electricity Boards through which electricity would be imported from the grid. Further Two Backup Diesel Generator Sets are provide as a backup source in case of Grid failure or any emergency

As per para 37 of ACM0002 version 16,

"For all renewable energy power generation project activities, emissions due to the use of fossil fuels for the backup generator can be neglected"

Therefore, Electricity imported by the project from the grid at interconnection point of the Regional Supply is considered for calculation of Net electricity generated and supplied by the project plant/unit to the grid.

Electricity imported by the project from the grid at interconnection point of the Regional Supply:

The Project activity has provision for two 11kV Electricity Supply line from State Electricity Boards system however only single line is connected which is used to import electricity during the lean period. The Electricity imported during start-up, shutdown and the lean period would also be recorded and monitored. Especially, in winter season when the project is partially or totally unable to operate, the project may draw energy required for start up and maintenance of the project from the State Electricity Boards system, which shall be metered at the interconnection point of the regional supply.

All the Energy meters will be calibrated atleast once in 5[4] years. The accuracy class of the energy meters is 0.5 s. The meter will be calibrated and maintained by State Electricity Board.

The data will be recorded by duly tested and sealed meter installed by State Electricity Board. The meter will be calibrated and maintained by State Electricity Board. Records of monthly electricity sales bills raised by State Electricity Board will be used as evidence for power imported from the State Electricity Grid.

Hence,
Electricity imported by the project from the grid at interconnection point of the Regional Supply = "Electricity Consumption from Regional Supply – 1" + "Electricity Consumption from Regional Supply – 2"

Therefore,

[4] CEA metering regulation clause 18 on page 12 of the regulation

http://www.powermin.nic.in/whats_new/pdf/Metering_Regulations.pdf

$EG_{PJ,y}$ **= 1,083,310 MWh**

II. Calculation of $EF_{grid,CM,y}$

The methodology ACM0002 (Version 16.0) requires that the combined margin for the grid be calculated in accordance with the procedure provided in the *"Tool to calculate the emission factor for an electricity system".*
As per "Tool to calculate the emission factor for an electricity system, Version 4.0.0";
The baseline emission factor ($EF_{grid,y}$) is calculated as a combined margin (CM), consisting of the combination of operating margin (OM) and build margin (BM) factors.

The methodology provides following approaches for emission factor calculations:

(a) *Combined margin (CM), consisting of the combination of operating margin (OM) and build margin (BM) according to the procedures prescribed in the approved methodology "Tool to calculate the emission factor for an electricity system".*

OR

(b) *The weighted average emissions (in t CO_2/MWh) of the current generation mix. The data of the year in which project generation occurs must be used.*

Option (a) has been considered to calculate the grid emission factor as per the 'Tool to calculate the emission factor for an electricity system' since data is available from an official source i.e.

CO_2 Baseline Database for the Indian Power Sector, Version 10, December 2014[5], published by Central Electricity Authority (CEA), Government of India has been used for the calculation of emission reduction.

As per the "Tool to calculate the emission factor for an electricity system" Version 04.0, EB 75, Annex 15, the following steps have been followed.

STEP 1: Identify the relevant electricity systems;
STEP 2: Choose whether to include off-grid power plants in the project electricity system (optional);
STEP 3: Select a method to determine the operating margin (OM);
STEP 4: Calculate the operating margin emission factor according to the selected method;
STEP 5: Calculate the build margin (BM) emission factor;
STEP 6: Calculate the combined margin (CM) emission factor.

STEP 1: Identify the relevant electricity power systems

The tool defines that "*for determining the electricity emission factors, identify the relevant electricity system. Similarly, identify any connected electricity systems".* It also states that *"If the*

[5] http://www.cea.nic.in/reports/planning/cdm_co2/user_guide_ver10.pdf

DNA of the host country has published a delineation of the project electricity system and connected electricity systems, these delineations should be used". Keeping this into consideration, the Central Electricity Authority (CEA), Government of India has divided the Indian Power Sector into five regional grids viz. Northern, Eastern, Western, North-eastern and Southern.

However since 2007-08 as the four regional grids except the Southern grid has been synchronized, they are now being considered as one and named as NEWNE grid. Since the project supplies electricity to the NEWNE and Southern grids, emissions generated due to the electricity generated by both the grids as per CM calculations will serve as the baseline for this project.

Table: Grid Classification

NEWNE				Southern
Northern	Eastern	Western	North-Eastern	
Chandigarh	Bihar	Chhattisgarh	Arunachal Pradesh	Kerala
Delhi	Jharkhand	Gujarat	Assam	Karnataka
Haryana	Orissa	Daman & Diu	Manipur	Tamil Nadu
Himachal Pradesh	West Bengal	Dadar & Nagar Haveli	Meghalaya	Andhra Pradesh
Jammu & Kashmir	Sikkim	Madhya Pradesh	Mizoram	
Punjab	Andaman & Nicobar	Maharashtra	Nagaland	
Rajasthan		Goa	Tripura	
Uttar Pradesh				
Uttarakhand				

STEP 2: Choose whether to include off-grid power plants in the project electricity system (optional)

Project participants have the option of choosing between the following two options to calculate the operating margin and build margin emission factor:

Option I: Only grid power plants are included in the calculation.
Option II: Both grid power plants and off-grid power plants are included in the calculation.

The Project Participant has chosen only grid power plants in the calculation.

STEP 3: Select a method to determine the operating margin (OM) method

The calculation of the operating margin emission factor ($EF_{grid,OM,y}$) is based on one of the following methods, which are described under Step 4:

(a) Simple OM, or
(b) Simple adjusted OM, or
(c) Dispatch data analysis OM, or
(d) Average OM.

The data required to calculate simple adjusted OM or Dispatch data analysis is not possible due to lack of availability of this activity data to the project developers. The choice of other two options for calculating the operating margin emission factor depends on the generation of electricity from low cost/must run sources. In the context of the methodology low cost/must run resources typically include hydro, geothermal, wind, low cost biomass, nuclear and solar generation.

Share of Must-Run (Hydro/Nuclear) (% of Net Generation)

	2009-10	2010-11	2011-12	2012-13	2013-14
NEWNE	15.9%	17.6%	19.0%	17.2%	18.0%
South	20.6%	20.9%	21.5%	15.8%	21.0%
India	17.1%	18.4%	19.6%	16.9%	18.6%

Data Source: Central Electricity Authority (CEA) database Version 10, Dec'2014

The above data clearly shows that the percentage of total grid generation by low cost/must run plants (on the basis of average of three most recent years) for the NEWNE and Southern grids is less than 50 % of the total generation. Thus the average emission rate method cannot be applied, as low cost/must run resources constitute less than 50% of total grid generation.

The "Simple operating margin" has been calculated as per the weighted average emissions (in tCO_2/MWh) of all generating sources serving the system, excluding hydro, geo-thermal, wind, low-cost biomass, nuclear and solar generation;

For the simple OM, the simple adjusted OM and the average OM, the emissions factor can be calculated using either of the two following data vintages:

- **Ex ante option:** If the ex ante option is chosen, the emission factor is determined once at the validation stage, thus no monitoring and recalculation of the emissions factor during the crediting period is required. **Or**

- **Ex post option:** If the ex post option is chosen, the emission factor is determined for the year in which the project activity displaces grid electricity, requiring the emissions factor to be updated annually during monitoring.

PP has chosen ex ante option for the calculation of OM with 3 years generation weighted average of the most recent years available at the time of submission of CDM-PDD to the DOE for validation.

OM determined at validation stage will be the same throughout the crediting period. There will be no requirement to monitor & recalculate the emission factor during the crediting period.

STEP 4: Calculate the operating margin emission factor ($EF_{grid,OM,y}$) according to the selected method

The operating margin emission factor has been calculated using a 3 year data vintage:

Net Generation in Operating Margin (MWh) (incl. Imports)

	2011-12	2012-13	2013-14
NEWNE	508,004,381	546,941,372	569,215,756

Simple Operating Margin (tCO_2/MWh) (incl. Imports)			
	2011-12	2012-13	2013-14
NEWNE	0.9699	0.9919	0.9953

Weighted Generation Operating Margin	
NEWNE	**0.9862**

STEP 5: Calculate the build margin emission factor ($EF_{grid,BM,y}$)

Option 1 as described above is chosen to calculate the build margin emission factor for the project activity. BM is calculated ex-ante based on the most recent information available at the time of submission of PDD and is fixed for the entire crediting period.

Build Margin (tCO_2/MWh) (not adjusted for imports)	
	2013-14
NEWNE	**0.9495**

(With sample group constituting most recent capacity additions to the grid comprising 20% of the system generation)

STEP 6: Calculate the combined margin (CM) emissions factor

Combined Margin – The combined margin is the weighted average of the simple operating Margin and the build margin. In reference to para 81 (b) of the Tool to calculate the emission factor for an electricity system, Version 04.0.0, EB 75, Annex 15, all projects other than wind and solar photovoltaic :
w_{OM} = 0.5 and w_{BM} = 0.5 for the first crediting period, and
w_{OM} = 0.25 and w_{BM} = 0.75 for the second and third crediting period,
unless otherwise specified in the approved methodology which refers to this tool.
The baseline emission factor is calculated using the combined margin approach as described in the following steps:

Calculation of Baseline Emission Factor ($EF_{grid,y}$)

The baseline emission factor $EF_{grid,y}$ is calculated as the weighted average of the Operating Margin emission factor **($EF_{grid,OM,y}$)** and the Build Margin emission factor **($EF_{grid,BM,y}$)**:

$$EF_{grid,y} = w_{OM} * EF_{grid,OM,y} + w_{BM} * EF_{grid,BM,y}$$

Where,

w_{OM}	50% weight of operating margin emissions factor (%)
w_{BM}	50% weight of operating margin emissions factor (%)
$EF_{grid,OM,y}$	Build margin CO_2 emission factor of a particular grid in year y; calculated as described in

	Steps 3&4 above (tCO_2/MWh)
$EF_{grid,BM,y}$	Build margin CO_2 emission factor of a particular grid in year y; calculated as described in Steps 5 above (tCO_2/MWh)

Baseline Emission factor (NEWNE Grid)

$$EF_{NEWNE,CM,y} = 0.50*0.9862 + 0.50*0.9495$$
$$= 0.9678\ tCO_2/MW$$

Therefore, Baseline Emissions:

$$BE_y = EG_{PJ,y} \times EF_{grid,CM,y}$$

BE_y = **1,083,310 x 0.9678 = 1,048,427tCO_2**

3.2 Project Emissions

The project emission calculation as per para 35 of ACM0002 version 16,

$$PE_y = PE_{FF,y} + PE_{GP,y} + PE_{HP,y}$$

Where:

PE_y	=	Project emissions in year *y* (t CO_2e/yr)
$PE_{FF,y}$	=	Project emissions from fossil fuel consumption in year *y* (t CO_2/yr)
$PE_{GP,y}$	=	Project emissions from the operation of geothermal power plants due to the release of non-condensable gases in year *y* (t CO_2e/yr)
$PE_{HP,y}$	=	Project emissions from water reservoirs of hydro power plants in year *y* (t CO_2e/yr)

$$PE_{FF,y} = 0$$

As per para 37 of ACM0002 version 16,

"For all renewable energy power generation project activities, emissions due to the use of fossil fuels for the backup generator can be neglected"

$$PE_{GP,y} = 0$$

Not applicable for the hydro power projects

$$PE_{HP,y} = 0$$

Since, the project is run of river, the project activity does not involve the installation of a new reservoir; it does not result in CH_4 emission from the reservoir.

Therefore, PE_y=0

3.3 Leakage

As per para 60 of ACM0002 version 16, No leakage emissions need to considered for the project activity.

3.4 Net GHG Emission Reductions and Removals

As per para 61 of ACM0002 version16; Emission Reductions are calculated as follows:

$$ER_y = BE_y - PE_y$$

Where:

ER_y	=	Emission reductions in year *y* (t CO_2e/yr)
BE_y	=	Baseline emissions in year *y* (t CO_2/yr)
PE_y	=	Project emissions in year *y* (t CO_2e/yr)

Therefore, Net GHG Emission Reductions and Removals are calculated as follows:

$$ER_y = BE_y - PE_y$$

ER_y**= 1,048,427– 0 = 1,048,427tCO_2**

Year	Estimated baseline emissions or removals (tCO_2e)	Estimated project emissions or removals (tCO_2e)	Estimated leakage emissions (tCO_2e)	Estimated net GHG emission reductions or removals (tCO_2e)
Year 1	1,048,427	0	0	1,048,427
Year 2	1,048,427	0	0	1,048,427
Year 3	1,048,427	0	0	1,048,427
Year 4	1,048,427	0	0	1,048,427
Year 5	1,048,427	0	0	1,048,427
Year 6	1,048,427	0	0	1,048,427
Year 7	1,048,427	0	0	1,048,427

Year 8	1,048,427	0	0	1,048,427
Year 9	1,048,427	0	0	1,048,427
Year 10	1,048,427	0	0	1,048,427
Total	**10,484,270**	**0**	**0**	**10,484,270**

4 MONITORING

4.1 Data and Parameters Available at Validation

Data / Parameter	$EF_{grid,OM,y}$
Data unit	tCO_2/MWh
Description	Operating Margin CO_2 emission factor in year y
Source of data	Calculated from CEA database, Version 10, December 2014[6]
Value applied:	0.9862 (NEWNE Grid)
Justification of choice of data or description of measurement methods and procedures applied	Calculated as per "Tool to calculate the emission factor for an electricity system, version 04.0.0" as 3-year generation weighted average using data for the years 2011-2012, 2012-2013 & 2013-2014. The data are obtained from "CO_2 Baseline Database for Indian Power Sector" version 10.0, published by the Central Electricity Authority, Ministry of Power, Government of India.
Purpose of Data	For the calculation of the Baseline Emission
Comments	This parameter is fixed ex-ante for the entire crediting period.

Data / Parameter	$EF_{grid,BM,y}$
Data unit	tCO_2/MWh
Description	Build Margin CO_2 emission factor in year y
Source of data	Calculated from CEA database, Version 10, December 2014
Value applied:	0.9495 (NEWNE Grid)
Justification of choice of data or description of measurement methods and procedures applied	Calculated as per "Tool to calculate the emission factor for an electricity system, version 04.0.0" for the year 2013-2014. The data is obtained from "CO_2 Baseline Database for Indian Power Sector" version 10.0, published by the Central Electricity Authority, Ministry of Power, Government of India.
Purpose of Data	For the calculation of the Baseline Emission
Comments	This parameter is fixed ex-ante for the entire crediting period.

[6] http://www.cea.nic.in/reports/planning/cdm_co2/user_guide_ver10.pdf

Data / Parameter	$EF_{grid,CM,y}$
Data unit	tCO_2/MWh
Description	Combined Margin CO_2 emission factor in year y
Source of data	Calculated from CEA database, Version 10, December 2014
Value applied:	0.9678 (NEWNE Grid)
Justification of choice of data or description of measurement methods and procedures applied	The combined margin emissions factor is calculated as follows: $EF_{grid,CM,y} = EF_{grid,OM,y} * W_{OM} + EF_{grid,BM,y} * W_{BM}$ Where: $EF_{grid,BM,y}$ = Build margin CO_2 emission factor in year *y* (tCO_2/MWh) $EF_{grid,OM,y}$ = Operating margin CO_2 emission factor in year *y* (tCO_2/MWh) W_{OM} = Weighting of operating margin emissions factor (%) = 50% W_{BM}= Weighting of build margin emissions factor (%) = 50%
Purpose of Data	For the calculation of the Baseline Emission
Comments	This parameter is fixed ex-ante for the entire crediting period.

4.2 Data and Parameters Monitored

Data / Parameter	$EG_{PJ,y}$
Data unit	MWh
Description	Quantity of net electricity generation supplied by the project plant/unit to the grid in year y
Source of data	It is a calculated based on $EG_{Export,y}$, $EG_{Import,y}$
Description of measurement methods and procedures to be applied	Net electricity supplied to grid will be calculated as *Net electricity generated and supplied by the project plant/unit to the grid = Electricity exported by the project to the grid at project site switch yard – Electricity imported by the project from the grid at interconnection point of the Regional Supply* $EG_{PJ,y} = EG_{Export,y} – EG_{Import,y}$
Frequency of monitoring/recording	Monthly recording
Value applied:	**1,083,310 MWh**
Monitoring equipment	Not Applicable as it is a calculated value
QA/QC procedures to be	Net electricity supplied to grid is a calculated value. Therefore

applied	QA/QC is provided for individual parameters $EG_{Export,y}$, $EG_{Import,y}$: • $EG_{Export,y}$ can be cross checked from the invoice raised by the PP to the DISCOM • $EG_{Import,y}$ is sourced from the electricity sales bills raised by State Electricity Board, which is a government organization responsible for monitoring the electricity, thus the values are authentic and credible. Further, this data may be cross checked with the Log books available at project activity site which monitors and record monthly data. However, the data recorded in the log book may not the same as the time of recording the data would be different between the plant log book and actual reading by the electricity board
Purpose of data	Calculation of Baseline emissions
Calculation method	$EG_{PJ,y} = EG_{Export,y} – EG_{Import,y}$
Comments	-

Data / Parameter	$EG_{Export,y}$
Data unit	MWh
Description	Quantity of Electricity exported by the project to the grid at project site switch yard in year y
Source of data	Joint Meter Reading (JMR) / Monthly Special Energy Meter statement (SEM) from the energy meters
Description of measurement methods and procedures to be applied	Electricity exported by the project to the grid at project site switch yard is the Net Transmitted Units recorded and monitored by the metering system installed at the project site switch yard. The metering system comprises of four individual special energy meters (SEMs) (acts as standby meters) installed at the power station, for each generating units. These are connected via two transmission lines of 400 kV, each having its own SEM meter (main meter and check meter). In case, anyone transmission line in not in service than complete load will be shifted to other transmission line which is in operation. The energy meters are tri-vector meter which are installed and sealed by the Power Grid Corporation Limited in the presence of the representatives of the power producer. The energy meters have capacity of recording both import & export; however net transmitted units are recorded & monitored. The monthly reading of electricity transmitted from the meters installed at the project site switch yard is jointly taken by the

	representative of the power producer and SEB official and this data is used for billing purposes. The check meter shall be used during the period the main metering system is not in service. Further in case of failure of both main meter and check meter, sum of the net electricity generation recorded by four individual special energy meters (SEMs) and individual auxiliary meters shall be used for accounting and billing purpose. Records of monthly Joint Meter Reading (JMR) or SEM statement report is used for the calculation of Electricity exported by the project to the grid at project site switch yard. Electricity exported by the project to the grid at project site switch yard will be calculated as *Electricity exported by the project to the grid at project site switch yard = "Net Transmitted Units recorded by* $L1_{Main\ Meter}$*" + "Net Transmitted Units recorded by* $L2_{Main\ Meter}$*"*
Frequency of monitoring/recording	Continuous measurement and monthly recording
Value applied:	Value will be measured and calculated ex-post
Monitoring equipment	Tri-Vector Energy Meters of 0.2s accuracy class
QA/QC procedures to be applied	Energy meters will be calibrated once in a five year and faulty meters will be duly replaced immediately. $EG_{Export,y}$ can be cross checked from the invoice raised by the PP to the DISCOM
Purpose of data	Calculation of Baseline emissions
Calculation method	*"Net Transmitted Units recorded by* $L1_{Main\ Meter}$*" + "Net Transmitted Units recorded by* $L2_{Main\ Meter}$*"*
Comments	The data would be archived electronically and maintained for the entire crediting period plus two years.

Data / Parameter	$EG_{Import,y}$
Data unit	MWh
Description	Quantity of Electricity imported by the project from the grid at interconnection point of the Regional Supply in year y
Source of data	Monthly electricity sales bills raised by State Electricity Board
Description of measurement methods and procedures to be	The Project activity has provision for two 11kV Electricity Supply line from State Electricity Boards system however only single line is connected which is used to import electricity during start-up, shutdown and the lean period.

applied	The Electricity imported during start-up, shutdown and the lean period would also be recorded and monitored. Especially, in winter season when the project is partially or totally unable to operate, the project may draw energy required for start up and maintenance of the project from the State Electricity Boards system, which shall be metered at the interconnection point of the regional supply. The data will be recorded by duly tested and sealed meter installed by State Electricity Board. The meter will be calibrated and maintained by State Electricity Board. Records of monthly electricity sales bills raised by State Electricity Board will be used as evidence for power imported from the State Electricity Grid. Electricity imported by the project from the grid at interconnection point of the Regional Supply will be calculated as *Electricity imported by the project from the grid at interconnection point of the Regional Supply = "Electricity Consumption from Regional Supply – 1" + "Electricity Consumption from Regional Supply – 2"*
Frequency of monitoring/recording	Continuous measurement and monthly recording
Value applied:	Value will be measured and calculated ex-post
Monitoring equipment	Energy Meters of 0.5s accuracy class
QA/QC procedures to be applied	Energy meters will be calibrated once in a five year and faulty meters will be duly replaced immediately. The meter will be calibrated and maintained by State Electricity Board. $EG_{Import,y}$ is sourced from the electricity sales bills raised by State Electricity Board, which is a government organization responsible for monitoring the electricity, thus the values are authentic and credible. Further, this data may be cross checked with the Log books available at project activity site which monitors and record monthly data. However, the data recorded in the log book may not be the same as the time of recording the data would be different between the plant log book and actual reading by the electricity board
Purpose of data	Calculation of Baseline emissions
Calculation method	*"Electricity Consumption from Regional Supply – 1" + "Electricity Consumption from Regional Supply – 2"*

Comments	The data would be archived electronically and maintained for the entire crediting period plus two years.

4.3 Monitoring Plan

The project proponents at the power station have a procedure to ensure proper monitoring of the VCS project activity. The project activity has installed monitoring and control equipment that measure, record, report, monitor and control various key parameters.

The methodology requires monitoring of the net electricity supplied from the project activity.

The proponent shall maintain complete and accurate records and all other data required for the purpose of proper administration and operation of the hydro power plant. The data will be kept for at least 2 years after the end of the crediting period.

1. Purpose - The purpose of monitoring the project is to assess the annual emission reductions in tonnes of CO2 that the project activity has achieved.

2. Data to be reported - EG_{export} & EG_{import} in MWh and periodical calibrations of monitoring equipments

3. Origin of data and monitoring including estimation approach- Net electricity generated and supplied to grid is a calculated value whereas EG_{export} is sourced from Monthly Joint Meter Reading (JMR) / Monthly Special Energy Meter statement (SEM) and EG_{import} is sourced from Monthly electricity sales bills raised by State Electricity Board

4. Meter Details:

   - Details of MAIN & CHECK METER for LINE-1

MAIN METER for LINE-1		CHECK METER for LINE-1	
Meter Serial No.	NP-7035-A	Meter Serial No.	NP-7074-A
Model	ER300P	Model	ER300P
Make	L&T	Make	L&T
Accuracy Class	0.2S	Accuracy Class	0.2S

   - Details of MAIN & CHECK METER for LINE-2

MAIN METER for LINE-2		CHECK METER for LINE-2	
Meter Serial No.	NP-7067-A	Meter Serial No.	NP-7007-A
Model	ER300P	Model	ER300P
Make	L&T	Make	L&T
Accuracy Class	0.2S	Accuracy Class	0.2S

Details of METER installed at interconnection point of Regional Supply Line – 1 (RS-1)

METER for RS-1

Meter Serial No.	JKB01864
Model	E3M055
Make	SECURE
Accuracy Class	0.5S

Regional Supply Line – 2 (RS-2) is not connected to state feeder as of now.

5. Monitoring times and periods - The data will be monitored on a continuous basis but will be recorded on a monthly basis with the energy meters installed at the site.

6. Data Accuracy - As per clause 4.0, Metering Arrangement of the Power Purchase Agreement (PPA) the metering arrangement including its installation, testing, maintenance and collection transportation and processing of data required for energy exchange shall be governed as per the notification/ directives issued/or to be issued by Central Electricity Regulatory Commission and as per relevant provisions contained in IEGC as amended from time to time. The Central Electricity Authority (CEA) notification regarding Installation and Operation of meters regulations, 2006, says that meters are required to be tested once in 5 years (refer clause 18 of the guideline) [7]. Thus, the meters recording the electricity exported will be calibrated at least once 5 years.

7. Emission Reduction Calculation Approach - The emission reductions are calculated as a product of the net electricity generated from the project activity and the combined margin emission factor. The calculation approach is explained in detail under section 3 of this document.

8. Monitoring roles and responsibilities: A project team would be constituted for the monitoring of the project. This team will be responsible for data collection and archiving. The team will meet periodically to review the data collected as per section 4.2. In case of any irregularity observed by any of the team members, it will be informed to the concerned person for necessary actions to be taken. The following be will the team structure for project monitoring:

    a. Unit Head: Overall responsibility of compliance with the monitoring plan.
    b. Power Plant In-charge: Responsibility for completeness of data, reliability of data (calibration of meters), and monthly report generation
    c. *Shift In-charge:* Responsibility of daily report generation from the SCADA system/ log-books

9. Managing Data Quality: The Power plant In-charge would prepare the report pertaining to the recorded values of the monitored parameters as by the shift-in- charge. The day to day records would be verified by Unit Head, compiled and documented. The company will introduce a safe storage of data. NHPC is an ISO – 9000, and ISO – 14000 certified company having an integrated management system. It will ensure also requirements are met for the project also.

[7] CEA metering regulation clause 18 on page 12 of the regulation

http://www.powermin.nic.in/whats_new/pdf/Metering_Regulations.pdf

5 ENVIRONMENTAL IMPACT

Centre of Research for Development, The University of Kashmir, Srinagar was entrusted with the task by NHPC to assess the impacts of project activity through Environmental Impact Assessment and preparation of Environmental Management Plan. It was done in the planning stage of the activity.

Summary of EIA Report: NHPC has established an Environment Management Group under the Planning Division of Corporation, which looks after monitoring and implementation of environmental safeguards at project and corporate level. Also with respect to the latest guidelines issued by the MoEF, Govt. of India, an Environmental Management Cell is proposed for the planning and implementation of Environmental Management Plan. Under the rehabilitation and resettlement[8], affected families are provided with a compensatory package. Also there are plans for development of green belt around the project area and a compensatory afforestation plan is to started to cover a land area along with the development of Catchment Area and Treatment (CAT) plan for the overall conservation of surrounding ecosystem.

6 STAKEHOLDER COMMENTS

A detailed stakeholder consultation process has been conducted by NHPC. This task was accomplished by the J&K State Pollution Control Board. The Member Secretary has issued notice for environmental public hearing on 07th April, 2004 & 09th May, 2004. An Environmental public hearing was conducted successfully on 15th May, 2004 at office of the Chief Engineer NHPC Rajarwani, Teshil Uri, District Baramulla.

The stakeholders identified for the project activity are as follows:

1. Government Officials
2. Local Citizens
3. Representatives of affected people including women residing in the project area.
4. Representatives of Panchayats of villages
5. NGO representatives

The discussions mainly aimed at–

- The basic protection of the biodiversity and environment affected due to the project
- Social issues like rehabilitation, compensation and employment
- Issues of water availability and natural calamities were also discussed
- Significant impacts in the region due to the project
- Possible impacts in the long run
- To understand various stakeholder perceptions
- Stakeholder awareness of project related issues

The comments of various stakeholders are reviewed below:

[8] http://www.nhpcindia.com/r-and-r-initiative.htm

- The entire project region is a relatively fragile ecosystem, which is likely to be affected by any construction activity. But, this project has taken up proper mitigation measures through a well implemented Environmental Management Plan (EMP).
- To generate employment and prevent the influx of population in form of unskilled labourers, NHPC will only employ local labourers, and only in case of non availability will it hire from outside.
- The project has caused displacement of local families, but proper compensation is provided to them and any grievances have been solved.
- The project development has lead to the anticipation of further developmental opportunities that will come up.
- For the project area proper earthquake parameters have been considered for the designing structures to prevent any calamity.
- That there are no apparent trends to indicate that the project has resulted in adversely affecting the livelihood, health, availability of water and other necessities of life in the region.

No major issue which would affect the life of the local community or raise any environment related problems in the region by the implementation of the project activity were identified during the discussion with stakeholders. All the minor issues were addressed and also the concerned departments are keeping a tight vigil for assessing any changes likely that may take place.

After completion of the public hearing, the final EIA & EMP reports and executive summary, Detailed Project Report (DPR) and proceedings of Public Hearing were submitted to MoEF for appraisal by the Expert Appraisal Committee (EAC) of MoEF. After recommendation of EAC, Environmental clearance was issued to the project on Date 13-Aug-2004

APPENDIX X: CO_2 DATABASE OF CEA

From CO2 database of CEA, Version 10 published by Government of India, Ministry of Power Central Electricity Authority, Government of India

CENTRAL ELECTRICITY AUTHORITY: CO_2 BASELINE DATABASE	
VERSION	10
DATE	6-Dec-14
BASELINE METHODOLOGY	ACM0002 / Ver 16.0 and "Tool to Calculate the Emission Factor for an Electricity System", Version 4.0

Net Generation in Operating Margin (MWh) (incl. Imports)			
	2011-12	**2012-13**	**2013-14**
NEWNE	508,004,381	546,941,372	569,215,756

Simple Operating Margin (tCO_2/MWh) (incl. Imports) (1) (2)			
	2011-12	**2012-13**	**2013-14**
NEWNE	0.9699	0.9919	0.9953

Weighted Generation Operating Margin	
NEWNE	0.9862

Build Margin (tCO_2/MWh) (not adjusted for imports)			
	2011-12	**2012-13**	**2013-14**
NEWNE	0.9331	0.9813	0.9495

Combined Margin Emission Factor	
NEWNE	**0.9678**