SOUBRE HYDROPOWER PROJECT MONITORING REPORT

Document Prepared by AERA GROUP

on behalf of CI-ENERGIES

Project Title	Soubré hydropower project
Version	1.3
Report ID	MR4
Date of Issue	15- February-2024
Project ID	1522
Monitoring Period	01-July-2022 to 30-June-2023
Prepared By	AERA Group
Contact	28 Cours Albert 1er, 75008 Paris, France Ph +33 1 42 18 02 02 I Fax +33 1 43 25 80 06 contact@aera-group.fr, www.aera-group.fr

CONTENTS

1 PROJECT DETAILS 3

1.1 Summary Description of the Implementation Status of the Project 3

1.2 Sectoral Scope and Project Type 5

1.3 Project Proponent 5

1.4 Other Entities Involved in the Project 5

1.5 Project Start Date 5

1.6 Project Crediting Period 6

1.7 Project Location 6

1.8 Title and Reference of Methodology 6

1.9 Participation under other GHG Programs 6

1.10 Other Forms of Credit and Supply Chain (Scope 3) Emissions 7

1.11 Sustainable Development Contributions 7

2 SAFEGUARDS 11

2.1 No Net Harm 11

2.2 Local Stakeholder Consultation 13

2.3 AFOLU-Specific Safeguards 23

3 IMPLEMENTATION STATUS 23

3.1 Implementation Status of the Project Activity 23

3.2 Deviations 24

3.3 Grouped Projects 25

4 DATA AND PARAMETERS 25

4.1 Data and Parameters Available at Validation 25

4.2 Data and Parameters Monitored 26

4.3 Monitoring Plan 29

5 QUANTIFICATION OF GHG EMISSION REDUCTIONS AND REMOVALS 29

5.1 Baseline Emissions 32

5.2 Project Emissions 34

5.3 Leakage 35

5.4 Net GHG Emission Reductions and Removals 36

1 PROJECT DETAILS

1.1 Summary Description of the Implementation Status of the Project

Soubré Hydropower Project(hereafter referred to as “Soubré HPP”) is a greenfield project located on the Sassandra river about 5 km from Soubré village, Côte d’Ivoire. Soubré HPP is composed of a run-of-river hydropower plant with a capacity of 270 MW and a micro-hydro power plant of 5.354 MW for a total of 275.354 MW generating capacity with a total estimated average gross electricity generation of 1,170 GWh per year, fed by a 17.3 km² reservoir. The plant is connected via three 225 kV transmission lines to the national grid: the transmission line Soubré-Buyo, Soubré-San Pedro and Soubré-Taabo.

The key technical indicators of the power plant are shown below:

Specifications of the power plant:				
Turbines	**Manufacturer**	**Type**	**Rated Power**	**Rated flow**
3	Alstom	Francis HLF250-LJ	93.93 MW	238 m^3/s
Generator	**Manufacturer**	**Type**	**Rated Power**	**Rated speed**
3	Alstom	SF90-56	90 MW / 105.88 MVA	107.14 r/min
Specifications of the micro-hydro power plant:				
Turbines	**Manufacturer**	**Type**	**Rated Power**	**Rated flow**
1	Alstom	Bulb GZ4B068-WP	5.51 MW	50 m^3/s
Generator	**Manufacturer**	**Type**	**Rated Power**	**Rated voltage**
1	Alstom	SFWG5360-28	6.7 MVA	6.6 kV

The relevant implementation dates:

Milestones	Dates
Approval of the environmental impact assessment by the Direction of Environment	February 2015
Approval of the environmental impact assessment by the ANDE decree n°0078	21-August-2015

Commissioning of G1	25-May-2017
Commissioning of G2	23-August-2017
Commissioning of G3	25-October-2017
Commissioning of G4	28-November-2017

The project facilities include a 1,730 ha reservoir delimited by a 4.5 km dam with a maximal height of 19.5 m along Sassandra river, in the vicinity of the Nawa falls. It makes full use of the total 42 m denivelation of the natural falls, and also benefits from the regulated inflows from Buyo existing reservoir, built in 1978 and located 90km upstream. The expected operational lifetime of the project equipment is 30 years.

To date, electricity in Côte d'Ivoire is mainly generated from fossil fuels (natural gas and fuel oil) which leads to considerable greenhouse gas emissions. The project activity therefore substitutes fossil-fuel intensive grid-electricity and cuts down corresponding GHG emissions. During the fourthperiod from 1st July 2022 to 30 June 2023 the project reduced 912,224 tCO2e for a total amount since commissioning of 4,967,399 tCO2e.

Audit Type	**Period**	**Program**	**VVB Name**	**Number of years**
Validation (crediting period)	25-May-2017 – 24-May-2027	VCS	Tuev Nord Cert GmbH (Tuev Nord)	10 years
Verification (monitoring period 1)	25-May-2017 – 30-June-2020	VCS	4KEARTHSCIENCE	3.1 years
Verification (monitoring period 2)	01-July-2020 – 30-June-2021	VCS	4KEARTHSCIENCE	1 year
Verification (monitoring period 3)	01-July-2021 – 30-June-2022	VCS	CARBON CHECK (INDIA) PRIVATE LIMITED	1 year
Verification (monitoring period 4)	01-July-2022 – 30-June-2023	VCS	4K Earth Science	1 year
Total	-			6.1

1.2 Sectoral Scope and Project Type

The Project belongs to sectoral scope 1: Energy (renewable/non-renewable), as it consists in Grid connected electricity generation from renewable sources. It is not a grouped project.

1.3 Project Proponent

Organization name	CI-ENERGIES
Contact person	M. Noumory SIDIBE
Title	General Manager
Address	01 BP 1345, Abidjan, 1345 Côte d'Ivoire
Telephone	+225 20 20 62 01
Email	secretariatdg@cinergies.ci

1.4 Other Entities Involved in the Project

Organization name	AERA Group
Role in the Project	Carbon consultant and trader
Contact person	Alexandre Dunod
Title	COO
Address	28 cours Albert 1er, 75008 Paris
Telephone	+33 6 42 96 09 78
Email	a.dunod@aera-group.fr

1.5 Project Start Date

The starting date of the project activity is 25-May-2017 when the renewable electricity production to the grid started, with the commissioning of the first generator.

While 01-January-2017 was the initially expected and registered start date as per VCS-PD, actual commissioning (as evidenced) only occurred on 25-May-2017 following implementation uncertainties/delays hence the start date revision.

1.6 Project Crediting Period

The Project crediting period lasts 10 years, from 25-May-2017 to 24-May-2027

1.7 Project Location

The project is located about 5 km from Soubré village on the river Sassandra, San Pedro Province, Bas Sassandra region, Côte d'Ivoire. The geographical coordinates of the project extension limits are 5°48'33" W, 6°39'28" S (Northernmost point of the dam) and 5°46'56" W, 6°36'55" S (Easternmost point). The physical location of the project is shown in Figure 1.

Figure 1 – The project location.

1.8 Title and Reference of Methodology

The approved baseline and monitoring methodology that is applied to the proposed Project is ACM0002 (version 16.0, EB 81, Annex 9) Large Scale Consolidated Methodology "Grid-connected electricity generation from renewable sources".

In line with the application of the ACM0002 methodology, the project refers to the following tools:

- "Tool to calculate the emission factor for an electricity system" (version 05.0, EB 87, Annex 9),
- "Tool for the demonstration and assessment of additionality" (version 07.0.0, EB 70, Annex 8),
- "Tool to calculate project or leakage CO_2 emissions from fossil fuel combustion" (version 02, EB 41, Annex 11).

In addition, the following methodological tools/tools were also employed:

- "Investment analysis" (version 06.0, EB 85, Annex 12)
- "Common practice" (version 03.1, EB 84, Annex 7)
- "Guidelines for the reporting and validation of plant load factors" (version 01, EB 48, Annex 11).

1.9 Participation under other GHG Programs

The project is simultaneously registered as a CDM Project activity under the UNFCCC (Project 10326)[1] ; however it either claims emission reduction under the VCS program or under the CDM, never both.

1.10 Other Forms of Credit and Supply Chain (Scope 3) Emissions

The project's GHG emission reductions activity is not included in an emissions trading program or any other mechanism that includes GHG allowance trading.

The project has not sought or received any other form of GHG-related environmental credit, as confirmed by written declaration of the Project Proponent.

The project activity involves the distribution of electricity thanks to a hydro power plant. The boundary of the emission reductions is limited to the decrease in fuel consumption for energy generation, hence there are no indirect upstream or downstream GHG emissions to the organization's supply chain.

1.11 Sustainable Development Contributions

Economically speaking, Côte d'Ivoire is among the Developing Countries. It ranks 171 of 199 countries on the Human Development Index (UNDP, 2014)[2]. The World Bank has estimated that 42.7% of Ivoirians live under national poverty line (World Bank, 2014)[3]. Reliability and coverage of electricity is one of the challenges to be faced by the country. It has increased over the past years, however the national coverage rate is still very low with only 33% of Ivorian locations connected (Ministry of Mining, Oil and Energy, 2012)[4] and only 26% of households have access to electricity in December 2011 (Agence Ecofin, 2014)[5].

In 2005, the decision to establish a Renewable Energy Directorate has set a distinctive hallmark in the official Renewable Energy development policy. The Electricity Code adopted by the Assembly in March 2014 should promote, among other, the development of the Renewable Energy sub-sector in Côte d'Ivoire; the set target being 15% by 2020.

The project helps the country meet its increasing demand for power reliably in a cost-effective and environment-friendly manner. The implementation of the project activity contributes to sustainable development in Côte d'Ivoire. In particular, the project:

[1] https://cdm.unfccc.int/Projects/DB/RWTUV1476171677.04/view

[2] Human Development Report

[3] World Development Indicators. Retrieved from World bank website: data, Côte d'Ivoire. www.worldbank.org/

[4] National seminar on Energy, November 2012 (in French: « Séminaire national sur l'énergie 2012 »). Ministry of Mining, Oil and Energy

[5] Agence Ecofin, May 21st 2014, Retrieved from Agence Ecofin website: http://www.agenceecofin.com/ , Article: "Côte d'Ivoire: only 26% of houselholds are duly connected to the grid"

- diversifies sources for electricity generation and decreases dependence on imported energy sources, above all natural gas and fuel oil.
- supports the Ivorian's government to achieve the goal of accessible and adequate energy supply at competitive costs.
- increases employment opportunities to local people (more than 1,500 direct jobs (20% SINOHYDRO, 80% local) and 2,500 indirect expected during construction, and 50 permanent positions during operation of the project),
- improves the regional facilities through the implementation of new schools, health center and housing, in addition to the creation of a fishing are in the area where the project is located, opening a new revenue stream for local populations, and the development of agriculture and tourism (with the promotion of Nawa falls).
- includes state-of-the-art socio-environmental mitigation measures for an estimated cost of 50 billion F CFA (15% of total investment).

Table 1: Sustainable Development Contributions

Row number	SDG Target	SDG Indicator	Net Impact on SDG Indicator	Current Project Contributions	Contributions Over Project Lifetime
1	6.1	6.1.1 Proportion of population using safely managed drinking water services	Implemented activities to increase	During this monitoring period, there was no increase in the population likely to have access to water per locality, as all of the connections had been done during previous MP.	In total, there are 182,512 people likely to have access to clean water. But an increase of 112% in subscribers' volume between 2015 and 2023.
2	7.1	7.1.1 Proportion of population with access to electricity	Implemented activities to increase	During this monitoring period, no new localities have been electrified/connected to the grid	During overall project lifetime, there have 8localities electrified.
3	7.2	7.2.1 Renewable energy share in the total final energy consumption	Implemented activities to increase	**1,509,806** MWh delivered to the grid during the monitoring period	In total, **8,221,488** MWh were delivered to the grid over the project lifetime : MP4: 1,509,806 MWh MP3: 1,166,281 MWh MP2: 1,298,363.6 MWh MP1: 4,247,036.9 MWh
4	13.0	Tonnes of greenhouse gas emissions avoided or removed	Implemented activities to increase	The project contributed to Emission Reductions amounting to **912,224** tCO_2e for this monitoring period	Total emission reductions for this project amount to **4,967,399** tCO_2e to date: MP4: 912,224 MP3: 704,667 MP2: 784,467

					MP1: 2,566,041

2 SAFEGUARDS

2.1 No Net Harm

Impacts on the natural resources and protected areas

- Land impacts: Flooded areas represent about 2,070 ha of land for agricultural use, 840 ha of water area of 60 ha and Sassandra classified forest Mountains Kourabahi.

- Protected areas: The encroachment on protected forest has been minimized. The 60 ha at stake are essentially riparian forest formations, south of the Kourabahi forest, in areas that the satellite image indicated as relatively dense at the time. Faced with widespread degradation of forest resources (estimated at 70% for the forest mountains Kourabahi), partial unclassification could be decided, offsetted by the reclassification of the southern area of the forest that would be isolated by the reservoir and a Sassandra affluent. Management of the classified forest could be backed by a contribution to the implementation of SODEFOR management plan and the enhancement of forest resources.

- Water resources: the impacts associated with water regime of the reservoir are essentially a maximum rise of water during annual flood and water level fluctuations at short intervals. The reserved flow at the spillway is designed to avoid various potential negative impacts, especially the preservation of the Nawa Falls. The decomposition of organic matter in the grip of the reservoir will affect water quality during filling. Deforestation of the reservoir area will mitigate this effect. The proven presence of invasive aquatic plants, especially water hyacinth, should be taken into consideration. Successful experiments on biological control of other reservoirs in Ivory Coast may be utilized on Sassandra, including Buyo dam.

Resettlement

The main objective of the choice of the 152 m level was to minimize displacement and resettlement needs. Assessments led to the estimation of 4,130 persons, or 516 households involved.

Land resettlement consists in the following:

- Development of village platforms, opening up and building of acceptable improved housing;

- Transfer of people and goods;

- Preparation of agricultural land, of accesses, support for cultivation according to improved crop management practises;

- Provision of food and/or compensation in lieu of crop losses;

- Construction of social infrastructure at national standards (education, health, water) and places of worship with initial support for the operation, replacement of other public or private facilities;

- Maintaining of socio-economic support means and monitoring and evaluation (10 years a priori) to regain economic conditions at least equivalent to those previously prevailing.

Non-land resettlement, which seems to be a priority for some groups, will take different forms:

- Urban and peri-urban resettlement. Kpéhiri village, which is adapted according to the needs of the project, is a possible site, near the town of Soubré;

- Conversion to fishing activities in the reservoir, for young people (provided that spontaneous immigration of foreign fishermen is managed);

- Conversion towards non-agricultural activities.

Other mitigation measures

- Contribution to the expansion of public drinking water along the river, water treatment plant feeding directly from reservoir rather than by pumping in the water surface;

- Appropriate information measures to prevent spontaneous immigration linked with project announcement.

- Road access improvements, like (i) replacement of the right bank road under construction, (ii) completion of a peripheral road between left bank and reservoir, and (iii) improvement of secondary roads from villages to main roads.

The detailed environmental impact assessment was submitted to the Direction of Environment in February 2015 and approved by ANDE decree n°0078 of August 21st, 2015.

As of the latest update of the project's Environmental and Social Management Plan (PGES,December 2022), its overall progress has reached 95% completion, detailed as follows:

- Creation of a biodiversity zone: 100%
- Tai National Park Protection: 100%
- Enhanced monitoring of natural habitats near Soubré: 100%
- Capture of animals on the islets before launching: 100%
- Fisheries development plan in the Soubré sector : 100%
- Kpéhiri – Amaragui road restoration: 100%
- Improvement of the collective infrastructure of the village of Gnamagui: 100%
- Support for village economic development and crop productivity improvement: 100%
- Setting up an alert system: 20%. It was planned to put in place a system of warning of the riparian populations on the manoeuvres to the spillway of floods. The features of the beacon have been approved and orders are in progress to allow its installation in late 2023.
- Rural electrification and extension of the electricity grid: 100%

- Adaptation of the SODECI pumping station: 100%
- Sassandra water quality monitoring: 100%
- Monitoring of the health conditions of the villages around the detention: 100%
- Securing hydroelectric works: 100%

The Resettlement Action Plan (PAR) has achieved its objectives with the restoration of impacted people's livelihoods. The construction of the resettlement sites with all the amenities of the urban areas and population displacements ended in 2018. Purge compensations of customary rights and destruction of agricultural crops have been carried out for all areas impacted by the dam.

2.2 Local Stakeholder Consultation

Stakeholder's consultations have been organized following the regulatory Ivorian laws regarding public consultation in the framework of Environmental Impact Assessment. A special care has been considered regarding the information, consultation and participation of stakeholders along the process. A Stakeholder consultation plan has been elaborated and its implementation has been done conjointly by project proponent, Tractebel Engineering France (a consultant company providing technical services to the project proponent) and the National Office for Technical Study and Development (BNETD).

A representative of Designated National Authority of Côte d'Ivoire, Mr Sylvain Amalaman, Environmental Impact Assessment study office chief has been designated to follow closely the implementation of the consultation process and has delivered an environmental license based on the conclusion that consultation requirements have been fulfilled.

Objectives of consultation's process have been defined into the consultation plan as follows[6]:

- Inform and communicate about social and environmental impacts of the project;
- Provide with information useful and easily understandable by people impacted by the project;
- Provide the opportunity to local stakeholders impacted by the project to provide with their opinion and to participate to the resettlement of communities displaced;
- Take into account the opinion expressed;

Stakeholders consulted are all physical or moral person impacted directly or indirectly by the project (the power plant and associated equipment's including the transmission line), positively and/or negatively located within the study zone defined in the environmental impact assessment plan.

The study zone from which people have been consulted includes all territory where a project impact, direct or indirect is expected. It includes:

- The power plant of Soubré, the electricity production site, the dikes, the water canals;
- The reservoir area;

[6] Consultation plan is provided to VVB.

- The others construction zone for the needs of the site;
- Extension of the current electricity station, new transmission line and substations;

The study zone includes:

- The periphery of the tank;
- The downstream and upstream watershed;
- The urban commune of Soubré;
- The resettlement zone of displaced populations.

Characteristics and identification of stakeholders consulted for the project are as follows:

- Populations and groups of population in the cities, villages and camps impacted by the project i.e.:
    - Villages and camps located within the area of the study zone defined above;
    - Villages and camps located close to the transmission line corridors;
    - People who own land and property on which the project will have impacts;
    - People that use agricultural and or natural resources;
    - Migrants attracted by the project that expect to get a job;
    - Local populations that have special links and rights with the land;
    - Neighbouring villagers that can provide local workforce;
- National and local administration authorities:
    - Mr prefect of Nawa region, prefect of Soubré's department;
    - Sub-prefect of sub-prefecture of Soubré and Oupoyo;
    - Soubré's municipality's chief;
    - Environmental Authorities from the government including DNA;
    - Traditional representatives including villages' chiefs, religious chiefs and tribes' chiefs;
- Institutions:
    - Cooperatives, local organisations, NGOs and other groups;
    - Commercial and industrial enterprises;
    - Media;
    - National Park of Taï (PNT);

The chronology of Soubré HPP stakeholders' consultation process included:

- Preliminary consultations conducted as early as August 2-16, 2010, with regional and national stakeholders in Abidjan and Soubré, as well as local orientation meetings in Kopéragui and Nyapoyo villages.
- Further interviews held in April 2011 with:
    - A number of neighbor villages from both banks of the river, selected based on 3 main criteria: historical significance (Kopéragui, Kpéhiri), role in foreign communities' implantation (Gnamangui, Nyapoyo, Obrouayo) and geopolitical situation (Gueyo, Mayo-Soubouo),
    - Local representatives of public technical services such as ANADER, SODEFOR, the Water & Forests committee, Soubré health district
    - Resource persons from agriculture cooperatives, women groups, youth associations, fisheries and foreign communities.
- An official public meeting in Soubré with local authorities and local stakeholders on January 30th 2013 to launch the final consultation process.

- First series of consultations within all villages that will be impacted by the project, organized conjointly by national institutions (development agencies, TEF-BNETD and environmental ministry representative) and the project proponent (CI-ENERGIES) from 13th to 18th of March 2013, with the following objectives:
    - Inform stakeholders regarding the project and its project proponent;
    - Inform stakeholders regarding studies/surveys that will be conducted before the project's construction;
    - To create and maintain contact between local authorities, traditional chiefs and the project proponent;
    - To collect views and opinions regarding project design and implementation.
- Second series of consultations organized from 15th to 21st of May 2014, based on provisional study results including:
    - Modalities proposed for resettlement of displaced population for the project;
    - Description of project's impacts and mitigation planned to reduce and compensate social and environmental impacts;

Procedure followed to invite stakeholder comments at the final consultation process launch meeting

The launch meeting of overall consultation process consisted of a public meeting held on 30/01/2013 at Soubré's cultural center, Côte d'Ivoire with the following identified stakeholders[7]. In order to make sure each locality was represented, every locality was assigned a representative.

Local stakeholders were invited through mailing addressed to:

- CI-ENERGIES TEF
- ANDE & DNA representatives
- BNETD
- Local committees
- Neighbour institutions and industries
- Media
- NGOs
- Housewives
- University's professors and students
- Energy experts
- Priests Christian church and Muslim communities representatives
- Small and Medium Enterprise representatives (restaurants…)
- Communities' representatives (schools)

At the meeting, information leaflets have been distributed to participants. During the whole week before the consultation, a broad communication has been done including invitations sent to main stakeholders (sub-prefect of the region (Soubré, Okrouyo, Grand Zatry, Gueyo, Dabouyo, Buyo, Méagui and Oupoyo), to central administration directors and service's chiefs as well as traditional local chief through formal invitations. Moreover, communication banners have been posted on the ceremony's location to invite people to participate (please see picture below). Eventually, people

[7] List of attendees has been provided to VVB.

have been hired to publicly announce the organization of the consultation in Soubré and its neighbouring villages.

To illustrate the massive participation, please see pictures and the list of attendance. For the meeting organization, project proponent rent height transportation vehicles and 500 chairs. Transportation from neighbouring villages has been organized by project participant and helped to reach massive participation. 410 participants have been recorded on the attendance lists. Below table provide with estimation of people per category:

Table 1 – Breakdown of public consultation meeting attendance

Type	Number	Percentage (%)
Public administration	48	12
Private administration	26	6
Elected people	7	2
Traditional Authorities	28	7
Population	298	72
NGO	3	1
Total	410	100

Program of the public meetings

Venue	**Cultural Center, Soubré**
Date	30/01/2013
Attendance	410 people
	(original attendance sheets available to theVVB)
Language	French
Meeting Objectives	- To present project's history and implementation steps
	- To locate the hydro power plant project
	- To present expected environmental and social impacts of the project
	- Present with environmental impact assessment study plan
	- To collect with questions and comments
Meeting procedure	- Introduction by Prefect of Nawa's region
	- Presentation of project proponent and consultants
	- Presentation of environmental impact assessment process and consultation process by ANDE (National Authority for the Environment and DNA)
	- Presentation of technical study and implementation plan
	- Questions and answers from participants
	- Conclusion

Figure 2: Picture of the participation table with municipality chief, experts and Prefect

Figure 3: Picture of sub-prefects and local authorities

Figure 4: Picture of traditional authorities

Figure 5: Picture of local population outside the meeting room under the big top installed

Last series of consultations

The second series of consultations was based on the first study's results and elaborated resettlement plan as well as mitigation plan. Various options were presented to be discussed with local stakeholders in order to take into account comments and opinions of local stakeholders.

Sub-prefecture	Locality	Date (year 2014)	Time	Location	Targeted stakeholders
SOUBRE OUPOYO	Local Authorities, Technical services (Agriculture, Water and Forests, Health, Education, Urbanism, etc.)	Thursday 15 May	9h-12h	Sub-prefecture of Soubré	Administration, local authorities, technical services…
OUPOYO	GNAMAGUI ILE DE GNAMAGUI	Friday 16th May	8h30-11h30	GNAMAGUI	Local Population and Traditional chief
	AMARAGUI BAFLATCHETOU	Friday 16th May	12h30-15h	AMARAGUI	
	PETIT-TIEME				
SOUBRE	KOPERAGUI	Saturday 17th May	9h-12h	KOPERAGUI	
	KOUAMEKRO	Saturday 17th May	13h-16h	KOUAMEKRO	
	KPEHIRI	Monday 19th May	9h-12h	KPEHIRI	
	GALEA 1	Monday 19th May	13h-16h	GALEA 1	
	GALEA 2				
	MAYO	Tuesday 20th May	9h-12h	MAYO	
	GUEYO	Tuesday 20th May	13h-16h	GUEYO	

	SAYO KONANKRO ADINKRO	Wednesday 21st May	9h-12h	SAYO	
	DIOULABOUGOU /SOKOURA/MAYO	Wednesday 21st May	13h-16h	DIOULABOUGOU	

Last but not least, a public survey has been conducted with National Authority for the Environment (ANDE), especially for fulfilling with regulatory requirements to present final results of this consultation process.

Several questions were raised after the presentation and answered by project participants. All questions were made in French apart one in local language Malinké.

Figure 6: Participants asking questions

Questions were mainly related to the below topics:

- Measures to protect the classified forests and mitigate the impacts of the project;
- Identification of people potentially impacted by the project;
- Compensation modalities of goods impacted (real estate, cultures, lands, economic activities…);
- Compensation period;
- Potential relocation sites for villages and camps that will be displaced;
- Project benefits for the local population, including electrification of neighbouring villages, construction of schools and infrastructure and health center;
- Situation of lands where owners were not identified;
- Protection measures of the Kourabahi Mount.

Answers and suggestions are provided below:

Soubré - Compilation of the Comments Received	
Local stakeholder hearing held on January 30th 2013 in Soubré	
Questions asked	**Answers provided**
Mme Kone Fatouma (NGO Femuna)	**Mr Pigeon**

Soubré - Compilation of the Comments Received	
Local stakeholder hearing held on January 30th 2013 in Soubré	
Questions asked	**Answers provided**
She would like to know measures taken to avoid classified forests during the project's implementation.	He reassures populations that measures for forests protection and conservation will be implemented.
Mr Gnahore Simplice He would like to know the compensation method that will be used.	**Mr Sabenin** He informs stakeholders that more information will be provided directly to people concerned.
Mr Aloure He would like to know the economic benefits of the power plants on the Soubré's city.	**Mr Kassi** He informs stakeholders that Soubré's electrification measures are part of the mitigation plan suggested by consultant.
Mr Kouadio Gildas He would like to know recruitment modalities of local workforce.	**Mr Kassi** He indicated that in collaboration with local authorities, SINOHYDRO, enterprise in charge of project implementation will proceed to hiring campaign destinated to youngers.
Mr Ghede Bada He wants to know more about the terms "assigns" and "operators" for land tenure.	**Mme Tagro and Mr Pigeon** They precised that epidemiological studies will be conducted.
Mr Zinon Gbi Jean He would like to know compensation period of planters.	**Mr Kassi** He indicated that studies over aquatic will be conducted and an hospital will be constructed at the workforce city level.
Mr Assiey Kouamé Evariste He would like to know if owners of economic activities will be taken into account in the compensation plan.	**Mr Kassi** He precised all type of people will be taken into account from all category.
Mr Sangare Lacina He would like to know the location of resettlement of plantors.	**Mr Pigeon** Only the study that will be realised will help determined the location of planters resettlement.
Doctor Kpaho Bernard He worries about the regional hospital that miss equipments	**Mr Kassi** He reassures participants that measures will be taken to rehabilitate the CHR. Mr Kassi affirmed that everything will be done in order to secure the dam.
M Lokoi Jean-Paul He would like to know what are the measures taken to mitigate future impacts of the project.	**Mr Bocquet** He reassures population that no change regarding the flow of the river despite the project implementation.
Mr Kouamala Amara He would like to know how project proponent will deal with people that were	**Mr Sabenin** He indicated that land tenure situation will be updated. **Mr Bocquet**

Soubré - Compilation of the Comments Received	
Local stakeholder hearing held on January 30th 2013 in Soubré	
Questions asked	**Answers provided**
not identified at the previous land tenure census. **Mr Kone Mamadou** He would like to know if a monitoring committee has been set up. **Mr Djikpa Sébastion** He would like to know the projects's benefits regarding the sale of energy including over the local population of Soubré. **Mr Esmel Akpa** He would like to know more about compensation modalities for culture. **Mr Gokui Emmanuel** He would like to know to who will be surrender the workforce city.	He affirmed that no committee have been put in place yet and Mr Amalaman indicated will take engagements regarding monitoring of mitigation measures decided. **Mr Kassi** He indicated that electricity price in Soubré will be the same as price of other city despite the power plant due to the fact that it is the state of Côte d'Ivoire that determines the electricity consumption cost. **Mr Kassi** He precised that compensation will be based on surface area and type of culture. **Mr Kassi** He affirmed that only the workforce city will be part of the heritage of Soubré's city.
Suggestion of the population	
Participants	**Project proponent**
Mr Koffi Kouamé Bernard He suggested to think about the streets of the city including the repavement of the main streets **Mr Yao Léla Modeste** He recommends to strengthen the school infrastructures. **Mr Dissia Mathurin** He suggested to take into consideration the village of Galéa located close to the city of managers of the project. **Mr Vaka Kplékpeule Noël** He provided a document listing the demands of the population to the project proponent's team. **Deputy Nedro** He encourages the population to provide all information to the project's team in the framework of data collection regarding land tenure. **Mr Zobre** He suggested to strengthen the security process for the power plant construction	On a general manner, regarding suggestion proposed by the population, Mr Kassi precised that: ✓ Streets of the city and schools infrastructures will be reinforced and new one will be constructed. It is already foreseen in the project implementation plan. ✓ Impacted population will provide with their requests directly to the project proponent experts.

Soubré - Compilation of the Comments Received	
Local stakeholder hearing held on January 30th 2013 in Soubré	
Questions asked	**Answers provided**
with the construction of a police station and public lighting of the city. **Mr Konate Yaya** He recommends to associate if possible the agricultural agents for delimitation of lands.	

The stakeholders welcomed the Soubré HPP project development and mentioned that it would definitely improve the socio-economic situation of the affected local communities such as job creation, development of the region, promotion of social activities such as rehabilitation of existing infrastructure (routes, schools, medical centre, water irrigation etc.), social welfare and increasing living standard etc.

The stakeholders raised precised concerns regarding modalities of compensations, scarcity of land that raise the problem of availability of land for cultivation, use of local workforce for the project construction, construction and reinforcement of current infrastructure, risk for health and security at the construction site.

As response to the concerns raised by the local population in-depth study has been conducted and results have been presented during the second series of consultation including 11 consultations at the Soubré's prefecture and 10 consultations within the neighboring cities between 15 and 22 May 2014. All concerns are taken into consideration into final environmental impact assessment report and presented in details in the environmental impact assessment report.

Regarding security at the construction site, the project developer implemented the following measures:

- Training of employees for security at work
- Implementation of national and international security norms
- Provision of medical assistance.

Neither negative comments nor opposition opinions were received from the consulted public and the personal interviews. Besides, the project initiative was widely praised during the questions & answers closing the public consultations, both for its innovative socio-environmental characteristics and for its local employment potential.

As guaranteed to all participants, all recommendations were humbly and responsibly taken into account and included in their Project development and monitoring plan including full information availability.

Mechanisms for ongoing communication

Continuous inputs & grievance expression are welcome through several methods, including:

- Reaching out to the project proponents (as per section 1.3 contact details, in writing, calling or physical meeting)
- Conveying comments or claims through the local authorities and the national environmental body (ANDE) only when they are directly concerned by the claims and project proponent cannot give an adequate response

There is a register of all the incoming mails which are classified according to their type, as follows: Request for visit, Request for help, Complaints, Request for visit, Invitation, Study visit, Information. Each type is color coded to make it easier to find them in the Excel file, for each year.During this monitoring period, project proponent received several mails but none of it was a complaint. Mails received during this monitoring period concerned : work request, help request, visit request, request for information, Invitations, and study visits. Although the register also records complaints received via telephone calls and face-to-face complaints, no such complaints were received.

2.3 AFOLU-Specific Safeguards

N/A

3 IMPLEMENTATION STATUS

3.1 Implementation Status of the Project Activity

The construction works, which lasted 4 years, allowed a dam to be built – a barrage 19 m high and 4.5 km long leading in the south to a 275.354 MW power plant (three Francis groups of 90 MW each), which enables an annual generating capacity of more than 1,170 GWh. The development also includes a spillway (5,500 m^3/s), a mini-hydropower plant (5.35 MW) driving turbines with the instream flow (50 m^3/s), a water intake linked to three penstocks of 8 metres in diameter, an outlet canal of 2.5 km, a motorway bridge, the switchyard and 380 km of 225 HT power line linking the cities of Soubré and Abidjan.

Soubré hydropower project had a planned execution time of 56 months and was completed ahead of schedule by Sinohydro International EPC contractor, in May 2017 as per following progressive commissioning by turbo-generator group:

- ***G1*** *: 25 may 2017*
- ***G2*** *: 23 august 2017*
- ***G3*** *: 25 october 2017*
- ***G4*** *: (mini-plant) : 28 november 2017*

It is as of today the biggest hydropower plant of its kind in Côte d'Ivoire. It allows the country to increase its electric power by 10%. At the time of project launch, Ivory Coast currently had an electrification level of 50% and aimed to move from a capacity of 2,000 MW to 4,000 MW by 2020. This energy mix is aimed at reducing the share of thermal energy by 50% and to lighten the gas bill while highlighting the strong commitment by Côte d'Ivoire to combat global warming. Soubré project costed €500 million with 85% financed by EXIMBANK, 15% funding by the Ivorian State.

No particular failure or breakdowns have occurred during the fourth monitoring period,

3.2 Deviations

3.2.1 Methodology Deviations

Not Applicable, as there is no methodology deviation for this monitoring period.

3.2.2 Project Description Deviations

[already formalized and approved at previous verification]

Actual project capacity has been updated based on installed groups power capacity converted in mega-watts, i.e. 3*105.88 MVA *0.85 + 6.7 MVA * 0.8 = 270 + 5.354 = 275.354 MW instead of 270 + 5.5 MW as previously stated.

Related power density has been updated consequently to 19.98 W/m². The deviation does not impact neither the applicability of the methodology, additionality nor the appropriateness of the baseline scenario.

[identified in the current verification – although pre-existent]

Ex-ante emissions reductions were calculated based on an estimated 'sold electricity' average of 1,170 GWh/y * 0.9 (applying such 0.9 discount factor to conservatively account for auxiliary consumptions and losses from net power generation assumption of 1,170 GWh/y) at time of (CDM)PDD registration, which lowered expected emission reductions by 10%. However, such losses between gross power plant generation and delivery sub-station exports are actually less than 1%, and irrelevant to the emission reductions since already accounted in the net metered energy at substation anyway.

As per *CDM Guidelines on assessment of different types of changes from the project activity*, the deviation does not impact neither:

- The applicability of the methodology is still applicable – as the project remain a large-scale project activity thus methodology ACM0002 v16.0.
- Additionality: the deviation does not impact the additionality of the project activity since a 9% increase in annual power generation remains within the +/-10% sensitivity analysis range (which breaking point for power revenues stood at +34.2% in energy generation) thus project remains additional[8].

[8] (1+9%)*(1+10%)= 1,19 i.e. +19.9% < 34%

- The appropriateness of the baseline scenario: The deviation does not impact continuation of practice for power generation in Côte d'Ivoire, which is fossil fuel-based consumption.

3.3 Grouped Projects

Not applicable.

4 DATA AND PARAMETERS

4.1 Data and Parameters Available at Validation

Data / Parameter	$EF_{grid,CM,y}$
Data unit	t CO_2/MWh
Description	Combined margin CO_2 emission factor for grid connected power generation in year y
Source of data	Calculated using the latest version of the "Tool to calculate the emission factor for an electricity system"
Value applied	0.6042
Justification of choice of data or description of measurement methods and procedures applied	As per the "Tool to calculate the emission factor for an electricity system" step-by-step method described in B.6.1 above. The weighted average CM method (Option a) is used: w_{OM} = 0.5 and w_{BM} = 0.5 Côte d'Ivoire national grid is the project boundary of the project.
Purpose of Data	Calculation of baseline emissions
Comments	-

Data / Parameter	Cap_{BL}
Data unit	W
Description	Installed capacity of the hydro power plant before the implementation of the project activity.
Source of data	Project site
Value applied	0
Justification of choice of data or description of	For new hydro power plants, this value is zero.

measurement methods and procedures applied	
Purpose of Data	Calculation of project emissions
Comments	This parameter is used to calculate the power density. However calculation of power density is not required for this proposed project activity (no reservoir).

Data / Parameter	A_{BL}
Data unit	m^2
Description	Area of the single or multiple reservoirs measured in the surface of the water, before the implementation of the project activity, when the reservoir is full (m^2).
Source of data	Project site
Value applied	0
Justification of choice of data or description of measurement methods and procedures applied	For new hydro power plants, this value is zero.
Purpose of Data	Calculation of project emissions
Comments	This parameter is used to calculate the power density.

4.2 Data and Parameters Monitored

Data / Parameter	$EG_{facility,y}$
Data unit	MWh/yr
Description	Quantity of net electricity generation supplied by the project plant/unit to the grid in year *y*
Source of data	Electricity meter(s)
Description of measurement methods and procedures to be applied	This parameter should be calculated as difference between (a) the quantity of electricity supplied by the project plant/unit to the grid, and (b) the quantity of electricity delivered to the project plant/unit from the grid. In case it is calculated then the following parameters shall be measured: (a) The quantity of electricity supplied by the project plant/unit to the grid; and (b) The quantity of electricity delivered to the project plant/unit from the grid

	Meters will be installed at the substation of the hydro power plant to measure directly and continuously the electricity supply to (and, if any, import from) the grid. The metering instruments will be calibrated annually in accordance with manufacturers specifications. Accuracy class of the meters is 0.2
Frequency of monitoring/recording	Continuous measurement and at least monthly recording
Value monitored	

Year	2022	2023	Total
$EG_{facility,y}$	767,555	744,251	1,509,806

Monitoring equipment	Electricity meter calibrated as per manufacturer's requirements.
QA/QC procedures to be applied	Cross check measurement results with records for sold electricity
Purpose of the data	Calculation of baseline emissions
Calculation method	-

Comments	The information is provided monthly by CI-ENERGIES, and contradictorily reconciled with CIE off-taker at invoicing stage. The electricity generated and delivered by Soubré to the grid is monitored both at the hydropower plant departure and at the substation delivery points, through metering equipments with a respective accuracy of 0.2% all, and invoiced monthly to CIE based on the reconciled, signed joint readings of delivered net electricity (after transmission losses). The meters have been verified by the central direction of energy transport and telecommunications sub-direction maintenance / control department of CI-Energie on 18 February 2021. The next calibration has been done from 15/12/2022 to 20/12/2022 valid until 14/12/2023 for G1, 15/12/2023 for G3 and 19/12/2023 for G2 & G4. The error identified in the delayed calibration test is beyond the maximum permissible error of the measuring equipment. Thus, paragraph 366 (b) of CDM validation and verification standard for project activities version 03.0 is applied. Therefore, the applicable error of 0.204% was conservatively deducted for the period going from 01/07/2022 to 31/12/2022. Calibration certificate number: DCET/SAT-MES 12 2022. All meters have been calibrated at installation and are annually tested by CI-Energie.

Data / Parameter	CAP_{PJ}
Data unit	W
Description	Installed capacity of the hydro power plant after the implementation of the project activity
Source of data	Project site
Description of measurement methods and procedures to be applied	Determine the installed capacity based on manufacturer's specifications or commissioning data or recognized standards
Frequency of monitoring/recording	Once at the beginning of each crediting period
Value monitored	275,354,000
Monitoring equipment	-

QA/QC procedures to be applied	-
Purpose of the data	Calculation of project emissions
Calculation method	-
Comments	This parameter is used to calculate the power density.

Data / Parameter	A_{PJ}
Data unit	m^2
Description	Area of the single or multiple reservoirs measured in the surface of the water, after the implementation of the project activity, when the reservoir is full
Source of data	Project site
Description of measurement methods and procedures to be applied	Measured from topographical surveys, maps, satellite pictures, etc.
Frequency of monitoring/recording	Once at the beginning of each crediting period
Value monitored	13,778,000
Monitoring equipment	-
QA/QC procedures to be applied	-
Purpose of the data	Calculation of project emissions
Calculation method	-
Comments	This parameter is used to calculate the power density.

4.3 Monitoring Plan

Monitoring of net electricity supplied by the project to the grid

The proposed project activity is connected via a transformer and a 33/225 kV transmission line to the national grid. The data to be monitored is the net electricity supplied to the grid.

The electricity delivered from Soubré HPP to the national grid is continuously monitored through metering equipment installed on the project site. The monitoring is based on real-time transmission

of the generation data by means of a fully automatic data acquisition system (SCADA, reading gross energy metered at powerhouse units).

Staff watches the operation status of metering equipments daily on site. Furthermore, designated staff collects the daily indexes (net energy metered at point of delivery) and compiles the totals of measured electricity monthly and completes the corresponding record. These records are checked by the company administrator or supervisor and reconciled in CIE off-taker presence before signed consensual invoicing.

Monitoring Organisation

The project operator CI-ENERGIES takes the responsibility of the monitoring plan implementation, supervision of the monitoring process, the data measuring, collection and recording, QA/QC, audit and reporting.

The staff from technical and financial departments undertakes the monitoring tasks including watching metering equipments periodically, collecting electricity data and completing records, checking and analyzing the data, archiving relevant records, reporting to the CDM manager.

Metering equipment

One meter per group has been installed in the power house as well as at the delivery substation, totalling 8 devices.

Power meters at groups departure [power house]

	G1	G2	G3	G4
Make	Itron, Inc.			
ID n°	67008922	67008923	67008929	67008924
Model	SL764A081 / 2014			
Voltage	3X57,7/100V			
Current	1(2)A			
Frequency	50Hz			
Accuracy class	active 0.2S reactive 1			
Operating span	48-240V DC / 57-415V AC			

Power meters at groups feeders [delivery station]

	G1	G2	G3	G4
Make	Yantai Dongfang Wistom électric CO, ltd		WASION GROUP LIMITED	Yantai Dongfang Wistom électric CO, ltd
ID n°	201512000007	201512000008	1708417095000001	201512000002

Model	DTZ178, Triphasé 4 fils	DTSD341-9	DTZ178, Triphasé 4 fils
Voltage	3x220 (380)V; 3x57.7 (100)V; 3x100V	3x220 (380)V; 3x57.7 (100)V; 3x100V	3x220 (380)V; 3x57.7 (100)V; 3x100V
Current	1.5 (6)A; 5(10)A	1.5 (6)A; 1(2)A; 5(10)A; 0.3(1.2)A; 5(6)A	1.5 (6)A; 5(10)A
Frequency	50Hz	50 +/- 2.5Hz	50Hz
Accuracy class	active 0,2S reactive 1	active 0.2S réactive 1-2	active 0,2S reactive 1
Operating span	0.9Un-1.1Un	0.7Un-1.3Un	0.9Un-1.1Un

Testing/calibration

All meters have been calibrated at installation and are annually tested by CI-Energie.

Quality assurance and quality control

The electricity delivered by Soubré HPP to the national grid is monitored trough metering equipment at the project site. The data is cross-checked against records from the grid for quality control.

All relevant data records obtained from the monitoring will be kept by the project owner during the crediting period and for at least two years after for VVB's verification.

Internal auditing Internal auditing procedures are conducted by a dedicated team in charge of recording and reporting of the relevant data. All the data regarding energy production and consumption is then consolidated through signed energy reading sheets.

Line diagram

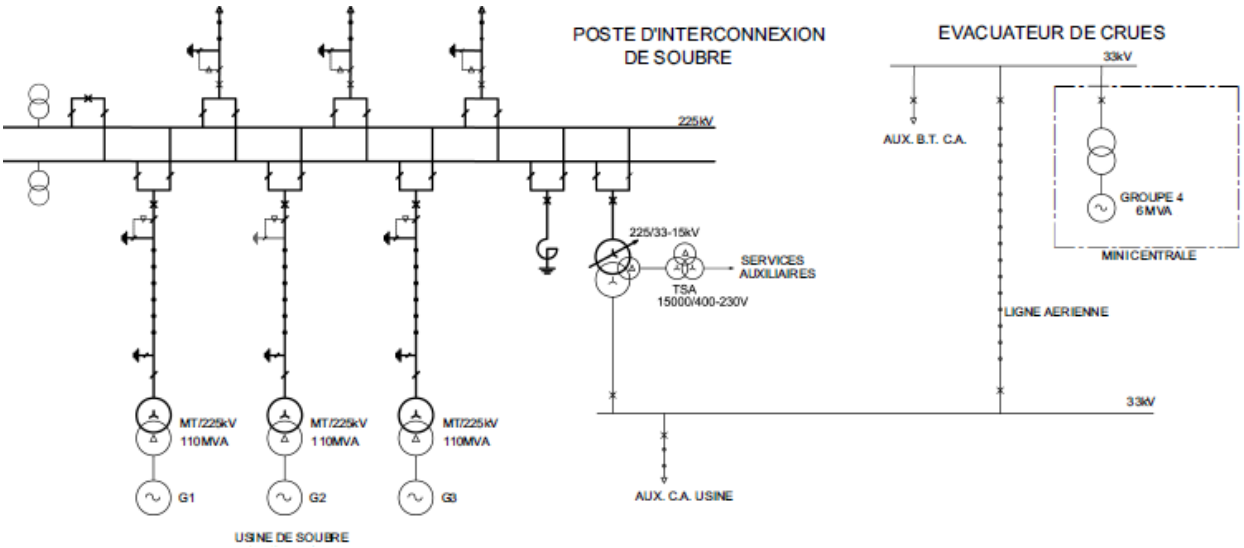

5 QUANTIFICATION OF GHG EMISSION REDUCTIONS AND REMOVALS

5.1 Baseline Emissions

Baseline emissions include only CO_2 emissions from electricity generation in fossil fuel fired power plants that are displaced due to the project activity. The methodology assumes that all project electricity generation above baseline levels would have been generated by existing grid-connected power plants and the addition of new grid-connected power plants. The baseline emissions are to be calculated as follows:

$$BE_y = EG_{pj,y} \times EF_{grid,CM,y}$$

Where:

BE_y = Baseline emissions in year y (tCO_2/yr)

$EG_{PJ,y}$ = Quantity of net electricity generation that is produced and fed into the grid as a result of the implementation of the CDM project activity in year *y* (MWh/yr)

$EF_{grid,CM,y}$ = Combined margin CO_2 emission factor for grid connected power generation in year *y* calculated using the latest version of the "*Tool to calculate the emission factor for an electricity system*" (tCO_2/MWh).

<u>Calculation of $EG_{PJ,y}$</u>

Since the project activity is "*the installation of a new grid-connected renewable power plant at a site where no renewable power plant was operated prior to the implementation of the project activity"*, it verifies the case of a Greenfield renewable energy power plant of the ACM0002 methodology Version 16.0 whereby:

$$EG_{PJ,y} = EG_{facility,y} \quad \textbf{(4)}$$

Where:

$EG_{PJ,y}$ = Quantity of net electricity generation that is produced and fed into the grid as a result of the implementation of the CDM project activity in year *y* (MWh/yr)

$EG_{facility,y}$ = Quantity of net electricity generation supplied by the project plant/unit to the grid in year *y* (MWh/yr)

$EG_{facility,y}$ is therefore the quantity of net electricity supplied by the project plant to the Ivorian electricity grid . It is determined as a difference between (i) quantity of electricity supplied by the project plant to the grid and (ii) quantity of electricity delivered to the project plant from the grid (please refer to section B.7 for monitoring details). The methodology ACM0002 Version 16.0 assumes that all project electricity generation above baseline levels would have otherwise been generated by the operation of grid-connected power plants and by the addition of new generation sources, as reflected in $EF_{grid,CM,y}$.

Calculation of $EF_{grid,CM,y}$

According to the "*Tool to calculate the emission factor for an electricity system*" Version 05.0, the combined margin (CM) emission factor shall be calculated by applying the following six steps:

STEP 1: Identify the relevant electricity systems;

STEP 2: Choose whether to include off-grid power plants in the project electricity system (optional);

STEP 3: Select a method to determine the operating margin (OM);

STEP 4: Calculate the operating margin emission factor according to the selected method;

STEP 5: Calculate the build margin (BM) emission factor;

STEP 6: Calculate the combined margin (CM) emission factor:

$$EF_{grid,CM,y} = EF_{grid,OM,y} \times \omega_{OM} + EF_{grid,BM,y} \times \omega_{BM}$$

Where:

W_{OM} is the weighting of operating margin emissions factor (%)

W_{BM} is the weighting of the build margin emissions factor (%)

$EF_{grid,BM,y}$ is the Build margin CO_2 emission factor in year y (tCO_2/MWh)

$EF_{grid,OM,y}$ is the Operating margin CO_2 emission factor in year y (tCO_2/MWh)

Where the weights W_{OM} and W_{BM}, by default, are 50 % (i.e. wOM = wBM = 0.5) as mentioned in the "Tool to calculate the emission factor for an electricity system" (version 04.0.0) for the first crediting period, and wOM = 0.25 and wBM = 0.75 for the second and third crediting period unless otherwise specified in the approved methodology which refers to this tool.

$EF_{grid,CM,y}$ = 0.6042 tCO_2/MWh

As the project don't lead to any emissions, the emission reductions of the project equal to baseline emissions for year y, thus $ERy = BE_y = EG_{pj,y} \times EF_{grid,CM,y}$

	$EG_{PJ,y}$	$EF_{grid,CM,y}$	BE_y
	MWh	**(tCO_2e/MWh)**	**tCO_2**
From 01/07/2022 to 31/12/2022	765,555	0.6042	462,548
From 01/01/2023 to 30/06/2023	744,251	0.6042	449,676
Total	**1,509,806**	**-**	**912,224**

5.2 Project Emissions

Project emissions shall be accounted by using the following equation:

$$PE_y = PE_{FF,y} + PE_{GP,y} + PE_{HP,y} \quad \textbf{(2)}$$

Where:

PE_y = Project emissions in year *y* (tCO_2e/yr)

$PE_{FF,y}$ = Project emissions from fossil fuel consumption in year y (tCO_2/yr)

$PE_{GP,y}$ = Project emission from the operation of geothermal power plants due to the release of non-condensable gases in year y (tCO_2/yr)

$PE_{HP,y}$ = Project emission from water reservoirs of hydro power plants in year y (tCO_2/yr)

<u>Project emissions from fossil fuel consumption ($PE_{FF,y}$)</u>

No project emissions are expected as the project activity only involves renewable electricity generation from the run-of-river hydroelectricity power plant without fossil fuel consumption, and according to para 31 of ACM0002 "for all renewable energy power generation activities, emissions due to the use of fossil fuels for the backup generator can be neglected, hence $PE_{FF,y}$ = 0.

<u>Project emission from the operation of geothermal power plants due to the release of non-condensable gases ($PE_{GP,y}$)</u>

Project is hydro power plant hence inapplicable and $PE_{GP,y}$ = 0.

Emissions from water reservoirs of hydro power plants ($PE_{HP,y}$)

The power density (PD) is calculated as follows:

$$PD = \frac{Cap_{PJ} - Cap_{BL}}{A_{PJ} - A_{BL}}$$

Where:

PD	= Power density of the project activity (W/m^2)
Cap_{PJ}	= Installed capacity of the hydro power plant after the implementation of the project activity (W)
Cap_{EL}	= Installed capacity of the hydro power plant before the implementation of the project activity (W). For new hydro power plants, this value is zero
A_{PJ}	= Area of the single or multiple reservoirs measured in the surface of the water, after the implementation of the project activity, when the reservoir is full (m^2)
A_{BL}	= Area of the single or multiple reservoirs measured in the surface of the water, before the implementation of the project activity, when the reservoir is full (m^2). For new reservoirs, this value is zero.

Installed capacity is 275,354,000 W and expected reservoir area, net of the original river bed, is 17,300,000 – 3,522,000 = 13,778,000 m^2 (BNETD topographical analysis, 2014). Therefore the resulting power density is:

PD = 275,354,000 / 13,778,000 = 19.98 W/m^2 > 4 W/m^2

For hydro power project activities that result in new single or multiple reservoirs and hydro power project activities that result in the increase of single or multiple existing reservoirs, project proponents shall account for CH_4 and CO_2 emissions from the reservoirs, estimated as follows:

According to para 39: “if the power density of the project activity is greater than 10 W/m^2, $PE_{HP,y}$ = 0”.

Consequently $PE_{HP,y}$ is not monitored.

5.3 Leakage

According to ACM0002 version 16.0, no leakage emissions are considered. The emissions potentially due to activity such as power plant construction and upstream emissions from fossil fuel use (e.g. extraction, processing, transport etc.) are neglected.

5.4 Net GHG Emission Reductions and Removals

Emission reductions were calculated with the following formula:

ERy = BEy – PEy

Year	Baseline emissions or removals (tCO_2e)	Project emissions or removals (tCO_2e)	Leakage emissions (tCO_2e)	Net GHG emission reductions or removals (tCO_2e)
From 01/07/2022 to 31/12/2022	462,548	0	0	462,548
From 01/01/2023 to 30/06/2023	449,676	0	0	449,676
Total	912,224	0	0	912,224

Ex-ante emissions reductions/removals		Achieved emissions reductions/removals		Percent difference	Justification for the difference
From 01/07/2022 to 31/12/2022	353,457	From 01/07/2022 to 31/12/2022	462,548	+31%	This is due to (i) equipments availability (thanks to good maintenance), (ii) increasing power demand from the grid, and (iii) upstream water releases from Buyo dam (due to inoperational group). The difference does not impact the project additionality as the
From 01/01/2023 to 30/06/2023	353,457	From 01/01/2023 to 30/06/2023	449,676	+27%	
Total	**706,914**	**Total**	**912,224**	+29%	

			breaking point for power revenues stood at +34.2% in energy generation.