NANCHANG ZHONGLAN HUANNENG TECHNICAL SERVICE CO. LTD. MAIYUAN LFG POWER GENERATION PROJECT

Document Prepared by Climate Bridge (Shanghai) Ltd.

Tel: +86 21 6246 2036; Fax: +86 21 2301 9950

Project Title	Nanchang Zhonglan Huanneng Technical Service Co. Ltd. Maiyuan LFG Power Generation Project
Version	1.1
Date of Issue	11-November-2020
Prepared By	Ms. Chen Genrong, Climate Bridge (Shanghai) Ltd.
Contact	Physical address: Block B, Level 24, Jiangong Mansion, 33 Fushan Road, Pudong New Area, Shanghai, China 200120 Telephone: +86 21 6246 2036; Email: chen.genrong@climatebridge.com http://www.climatebridge.com

CONTENTS

1 PROJECT DETAILS 4

1.1 Summary Description of the Project 4
1.2 Sectoral Scope and Project Type 5
1.3 Project Eligibility 5
1.4 Project Design 5
1.5 Project Proponent 5
1.6 Other Entities Involved in the Project 6
1.7 Ownership 6
1.8 Project Start Date 6
1.9 Project Crediting Period 6
1.10 Project Scale and Estimated GHG Emission Reductions or Removals 6
1.11 Description of the Project Activity 7
1.12 Project Location 9
1.13 Conditions Prior to Project Initiation 9
1.14 Compliance with Laws, Statutes and Other Regulatory Frameworks 10
1.15 Participation under Other GHG Programs 10
1.16 Other Forms of Credit 10
1.17 Additional Information Relevant to the Project 11

2 SAFEGUARDS 11

2.1 No Net Harm 11
2.2 Local Stakeholder Consultation 12
2.3 Environmental Impact 15
2.4 Public Comments 17
2.5 AFOLU-Specific Safeguards 17

3 APPLICATION OF METHODOLOGY 17

3.1 Title and Reference of Methodology 17
3.2 Applicability of Methodology 17
3.3 Project Boundary 17
3.4 Baseline Scenario 26
3.5 Additionality 27

3.6 Methodology Deviations 30

4 QUANTIFICATION OF GHG EMISSION REDUCTIONS AND REMOVALS 30

4.1 Baseline Emissions 30

4.2 Project Emissions 30

4.3 Leakage 44

4.4 Net GHG Emission Reductions and Removals 46

5 MONITORING 46

5.1 Data and Parameters Available at Validation 51

5.2 Data and Parameters Monitored 51

5.3 Monitoring Plan 58

1 PROJECT DETAILS

1.1 Summary Description of the Project

Nanchang Zhonglan Huanneng Technical Service Co. Ltd. Maiyuan LFG Power Generation Project (hereinafter referred to as the Project) is located at the Nanchang Maiyuan landfill in Shuangling village, Jiaoqiao town, Nanchang Economic and Technological Development Zone, Nanchang city, Jiangxi province, P.R China. The project is owned and implemented by Nanchang Zhonglan Huanneng Technical Service Co. Ltd.

Nanchang Maiyuan landfill owned by local City Management Bureau, the first phase began operation in 1997 and second phase operated in 2002, with an aggregate designed capacity of 17,930,000m^3 and an operational lifespan of 31.5 years. It handles an average of 1000 tonnes MSW per day which is mainly from the Nanchang City. The area used for waste disposal covers 655,000 m^2 and the average depth is 20~30m.

Before the implementation of the project activity, there was an existing landfill gas (LFG) power generation project named "Nanchang Maiyuan Landfill Gas Recovery and Utilisation Project" (hereinafter refers to as the existing LFG project) with the installed capacity of 3MW, which has been registered as a CDM project (reference number 1745). With the increasing amount of waste in landfills about 2800 tonnes/day, the landfill gas in the landfill was greatly exceed the amount of the existing project demands. In this condition, the proposed VCS project is designed and constructed by the project owner to capture and utilized the landfill gas that the existing LFG project has not captured and emitted into the atmosphere directly for power generation. The electricity generated by the project is supplied to Central China Power Grid (CCPG). The new and independent gas extraction and utilization systems will be installed by the project. Before the implementation of the project activity, the landfill gas that captured and utilized by the project was emitted into the atmosphere directly. The electricity is provided by Central China Power Grid (CCPG) which is dominated by coal-fired power stations. This is the scenario that existed prior to the implementation of the project activity and is also the baseline scenario.

In absence of the project, equivalent amount of electricity exported to the grid by the project would have otherwise been supplied by Central China Power Grid (CCPG). Greenhouse gas (GHG) emissions will be reduced by avoiding CO_2 emissions from those fossil fuel-based power plants connected to the grid and by avoiding GHG emissions from releasing LFG into atmosphere at the landfill site.

The purpose of the project is to utilize landfill gas (LFG), which consists mainly of methane, for electricity generation. It includes LFG collection system, LFG pre-treatment system and electricity generation system. LFG collected will be used for electricity generation with internal combustion generators. The total installed capacity will be 6.402MW. The annual average amount of feed-in

electricity is estimated to be 38,356MWh. The expected average annual emission reductions are 193,972 tCO_2e during the fixed 10 years crediting period.

1.2 Sectoral Scope and Project Type

Sectoral Scope 1: Energy industries (renewable - / non-renewable sources)

Sectoral Scope 13: Waste handling and disposal.

The project is not a grouped project.

1.3 Project Eligibility

The scope of the VCS Program includes:

1) The six Kyoto Protocol greenhouse gases: The emissions reduction of the project comes from two sources: 1) Methane (CH_4) emissions as a result of the previously vented landfill gas that will be captured and destroyed in the project scenario; 2) CO_2 emissions from the production of the equivalent amount of electricity replaced by the Project that would otherwise have been purchased from the fossil fuel fired power plants of Central China Power Grid (CCPG). Thus, the project applicable to this scope.

2) Ozone-depleting substances: NA

3) Project activities supported by a methodology approved under the VCS Program through the methodology approval process: NA

4) Project activities supported by a methodology approved under a VCS approved GHG program, unless explicitly excluded under the terms of Verra approval: The methodology ACM0001 (Version 19.0) of the project utilized is a methodology approved under CDM Program, that is a VCS approved GHG program.

5) Jurisdictional REDD+ programs and nested REDD+ projects as set out in the VCS Program document Jurisdictional and Nested REDD+ (JNR) Requirements: NA

Meanwhile, the project is not belonged to the projects excluded in Table 1 of VCS Standard 4.0.

Thus, the project is eligible under the scope of VCS program

1.4 Project Design

The project has been designed to be a single installation of an activity, not a grouped project.

1.5 Project Proponent

Organization name	Nanchang Zhonglan Huanneng Technical Service Co. Ltd.

Contact person	Lai Xinjiang
Title	Deputy general manager
Address	Room 101, Nanchang Economic and Technological Development Zone Office Building, Nanchang City, Jiangxi Province, China
Telephone	+86 -21 23019950
Email	1169735462@qq.com

1.6 Other Entities Involved in the Project

Organization name	Climate Bridge (Shanghai) Ltd.
Role in the project	VCU buyer
Contact person	Gao Zhiwen
Title	General Manager
Address	Block B, Level 24, Jiangong Mansion, 33 Fushan Road, Pudong New Area, Shanghai, China 200120
Telephone	+86-21 62462036
Email	gao.zhiwen@climatebridge.com

1.7 Ownership

The project owner of the project is Nanchang Zhonglan Huanneng Technical Service Co. Ltd. The approval of Environmental Impact Assessment (EIA), Feasibility Study Report (FSR), and the business license of the project owner are evidences for legislative right. Besides, the purchasing contract of generators, and the purchasing power agreement are the evidences for the ownership of the plant, equipment and power generating.

1.8 Project Start Date

01-January-2019 (operation start date).

1.9 Project Crediting Period

This project adopts fixed crediting periods of 10 years, from 20-Feb-2019 to 19-Feb-2029 (both days included).

1.10 Project Scale and Estimated GHG Emission Reductions or Removals

Project Scale	
Project	✓
Large project	

Year	Estimated GHG emission reductions or removals (tCO_2e)
01-Jan-2019 to 31-Dec-2019	219,118
01-Jan-2020 to 31-Dec-2020	219,118
01-Jan-2021 to 31-Dec-2021	219,118
01-Jan-2022 to 31-Dec-2022	219,118
01-Jan-2023 to 31-Dec-2023	219,118
01-Jan-2024 to 31-Dec-2024	213,096
01-Jan-2025 to 31-Dec-2025	187,512
01-Jan-2026 to 31-Dec-2026	165,666
01-Jan-2027 to 31-Dec-2027	146,959
01-Jan-2028 to 31-Dec-2028	130,894
Total estimated ERs	1,939,717
Total number of crediting years	10
Average annual ERs	193,972

1.11 Description of the Project Activity

The baseline scenario to the project is the situation existing before the implementation of the project. Before the implementation of the project activity, LFG captured and utilized by the project was released directly into the atmosphere. In addition, the quantity of electricity produced using LFG would have been produced by power plants connected to the grid.

By replacing the electricity generated from fossil fuel-fired power plants dominated CCPG and the flare of unused landfill gas, the proposed project activity will achieve considerable greenhouse gas emission reductions by reducing CO_2 and CH_4 emissions. The project activity will install a comprehensive system for LFG recovery and utilization on the existing landfill site independent to the existing LFG project. The system will involve LFG collection, LFG pre-treatment, electricity generation and LFG flaring. The key systems involved in the proposed project are as follows:

- Gas collection system

  The landfill gas collecting system is a gas pipeline network, consisting of gas collecting wells, gas collecting pipelines, and gas collection blower. LFG will be extracted by gas collection blower and transported by pipeline from gas collection wells.

- Gas pre-treatment system

  Before electricity generation and flaring, the LFG will be pre-treated to remove impurities and moisture etc., in order to prevent the corrosion of the electricity generation system. In addition, land fill gas should be continuously in a stable condition before it flows into gas engine or flare. The pre-treatment consists of pre-filtration, dehumidification, dewatering, cooling and fine filtration.

- **Electricity generation system**

  The electricity generated using LFG, except small portion for on-site usage, will be predominantly sold to the CCPG through nearby distribution network. Six electricity generators with each capacity of 1.067MW, internal combustion engine generators, will be installed by the project. The annual average running time is 7200 hours as determined by a certified design institute.

  This is a well-known and high reliable technology for biogas utilization. Furthermore, internal combustion engine generating sets have modular design and are available in many different sizes permitting the installation of power plant step by step as the LFG flow increases. High performance and reliability are guaranteed for the equipment.

  The detailed information about the technology of the project is shown in the table below.

Table 1 Technical parameters of the gas generators[1]

Type	JGS 320GS-L.L
Quantity	6
Rated capacity	1.067 MW
Rated power factor	1
Rated frequency	50HZ
Rated Voltage	400V
Rated current	1540A

[1] Sourced from nameplate of the generator

1.12 Project Location

The Project is located at the Nanchang Maiyuan landfill in Shuangling village, Jiaoqiao town, Nanchang Economic and Technological Development Zone, Nanchang city, Jiangxi province, P.R China. The geographical coordinates for the project site are east longitude 115°46′49″ and north latitude 28°44′6″.

The geographic location of the project is shown in Figure 1-2.

Figure 1-2 Location of the project

1.13 Conditions Prior to Project Initiation

The scenario existing prior to the start of the implementation of the project activity is:

1) LFG captured and utilized by the project was released directly into the atmosphere. In addition; 2) the quantity of electricity produced using LFG would have been produced by power plants connected to the grid (CCPG).

1.14 Compliance with Laws, Statutes and Other Regulatory Frameworks

The project complies with all Chinese relevant laws and regulations. Mainly include:

1. Renewable Energy Law of the People's Republic of China;
2. National Action plan for the collection and Utilization of municipal landfill gas;
3. Catalogue for the Guidance of Industrial Structure Adjustment (2011 version);
4. Jiangxi provincial "13th Five-Year" energy development plan.

The project obtained the project approval and EIA approval from governmental authorities: Ganjiang New District Administrative Examination and Approval Bureau and Nanchang Administrative Approval Bureau. The two approvals well demonstrate that local government permits the construction of the project. Consequently, the project is compliance with laws, status and other regulatory frameworks.

1.15 Participation under Other GHG Programs

1.15.1 Projects Registered (or seeking registration) under Other GHG Program(s)

The project has neither been registered nor seeking registration under any other GHG programs.

The project is seeking registration only in VCS program.

1.15.2 Projects Rejected by Other GHG Programs

NA.

1.16 Other Forms of Credit

1.16.1 Emissions Trading Programs and Other Binding Limits

The project proponent is not part of any emission trading program. The net GHG emission reductions from the project will not be used for compliance with emission trading programs or to meet binding limits on GHG emissions. The project activity has not participated under any other GHG programs.

1.16.2 Other Forms of Environmental Credit

The project hasn't sought or received another form of environmental credits.

1.17 Additional Information Relevant to the Project

Leakage Management

According to the methodology, the leakage of the project is zero, thus the leakage management is not applicable to the project.

Commercially Sensitive Information

No commercially sensitive information has been excluded from the public version of the project description.

Sustainable Development

The Project will contribute to sustainable development in the following ways:

- Reduce air pollution. The project will utilize and destroy landfill gas that would otherwise be released directly into the atmosphere, effectively reducing air pollution and improving the environment around landfills;
- Improve the operational safety of the landfills. The project reduces the potential safety hazards of landfill gas explosion by recycling landfill gas and improves the safety of landfill operations;
- The construction and operation of the project will provide new local jobs and increase tax revenue, which will have a positive effect on the local economy.

Further Information

NA.

2 SAFEGUARDS

2.1 No Net Harm

The Environmental Impact Assessment (EIA) Report for the project was compiled by Jiangxi Nanda Ronghui Environmental Technology Co. Ltd. The EIA Report for the Project has been approved by Nanchang Administrative Approval Bureau on 13-December-2018, with approval No. “Hongxingshenchengzi[2018] No.114”. Every aspect of environmental impact has been considered in the EIA report with corresponding measures during project development, and no net harm has been detected. Meanwhile, the implementation of the project will improve local socio-economic development through creating career opportunities and paying taxes.

2.2 Local Stakeholder Consultation

The Project owner collected comments by local stakeholders on the project activity. Survey questionnaires were distributed to relevant personnel of the landfill site, local villagers and government officials by the Project owner on 20-December-2018. The survey questionnaire was designed to assess the project impacts on the local environment and social economic development. The structure of the survey respondents is listed in Table 2-1 below.

Table 2-1 Structure of stakeholders surveyed

Item \ Distribution		Quantity	Percentage
Amount of stakeholders surveyed	Male	23	57.5%
	Female	17	42.5%
Age	<25	7	17.5%
	25-45	16	40%
	45-55	11	27.5%
	>55	6	15%
Education	Junior high school or below	18	45%
	Senior high school	15	37.5%
	College or above	7	17.5%
Occupation	Worker	14	35%
	Peasant	12	30%
	Management personnel	8	20%
	Civil servant	4	10%
	Unspecified	2	5%

Forty questionnaires were distributed to local stakeholders, and all questionnaires have been recollected. Comments from these questionnaires are summarized in Table 2-2 below:

Table 2-2 Summary of stakeholders' comments

No.	Questions	Attitude or Opinion	Amount	Percentage
1	Do you know about the project activity?	Very much	31	77.5%
		Heard of	9	22.5%
		Nothing	0	0
2	Do you think the project will improve the current situation of landfill?	Yes	37	92.5%
		No	0	0
		Don't know	3	7.5%
3	Do you think the project will promote local economic development?	Yes	36	90%
		No	0	0
		Don't know	4	10%
4	Do you think the project will improve the local employment situation?	Yes	33	82.5%
		No	0	0
		Don't know	7	17.5%
5	What impact do you think will the project bring to your family?	Positive impact	28	70%
		No impact	12	30%
		Negative impact	0	0%
6	What is the most probable environmental impact do you think the project will	None	35	87.5%
		Air pollution	0	0%

	cause after the construction finish? (multiple choice)	Water pollution	0	0
		Noise pollution	0	0%
		Harm to indigenous animals and plants	0	0%
		Don't know	5	12.5%
7	What do you think will be the project's impact on the local community? (multiple choices)?	Promote economic development	28	70%
		Improve electricity supply condition	34	85%
		No great impact	3	7.5%
8	What is your attitude to the project activity?	Support	38	98%
		Against	0	0
		Indifferent	2	5%

In general, local stakeholders are supportive of the project construction. The survey shows that a majority of local stakeholders think the Project will help improve the life of local people and promote local economic development without much adverse environmental impact. The survey shows that almost all of the stakeholders are supportive to the proposed project, believing that the Project will provide more employment opportunities, help local economic development, and increase local power supply. Therefore, the implementation of the Project is regarded as beneficial by most of the local stakeholders.

Local Stakeholder Consultation during the project implementation stage:

Communications with Local stakeholders are being carried out at periodic intervals. Key implementation schedules or changes of the project will be communicated to the local authority, who will inform the neighbourhood committee and the local residents, the comments and suggestions from residents will be collected by the local authority meanwhile. And the local government agencies and competent authorities will conduct spot checks on the implementation of the project from time to time, and give suggestions on the involved rectification problems. There are no negative comments received for the project. In line with VCS requirements all the

processes have been implemented to receive comments from local stakeholders as well as communicate with them at periodic intervals.

2.3 Environmental Impact

The Project owner entrusted a third party, Jiangxi Nanda Ronghui Environmental Technology Co. Ltd. to conduct the Environmental Impact Assessment (EIA) on the project. The EIA report was completed in November 2018 and was approved by Nanchang Administrative Approval Bureau on 13-December-2018. The environmental impacts of the project in construction period and in operation period are summarized as follows.

1. Construction Phase

1.1 Air pollution

Construction dust during the construction and road dust has a certain effect to the surrounding areas of construction site, these adverse effects are accidental, temporary and partial, as long as to take effective measures and strengthen management, the scope of its influence is generally limited to the surrounding area of the construction site, and will disappear along with the end of construction.

1.2 Wastewater

Wastewater during the construction period mainly includes construction wastewater and domestic sewage. Domestic sewage is pre-treated in a temporary septic tank and then discharged into the leachate adjustment tank of the Maiyuan landfill site for treatment and then discharged into the Honggutan Wastewater Treatment Plant for further treatment. Finally, it will be discharged into the north branch of the Ganjiang River; the construction wastewater will be sprayed to suppress dust after precipitation treatment, which can reduce the impact of wastewater on the surrounding environment during the construction period.

1.3 Noise

The noise generated by the project construction has a slight impact on the surrounding sensitive points, and its pollution impact is localized and short-term. After adopting a reasonable construction organization method, its impact on the surrounding area can be reduced to acceptable range.

1.4 Solid waste

During the construction period, a certain amount of construction waste and domestic waste from construction workers will be generated, of which part of the construction waste will be recycled, and the unusable waste will be handed over to the sanitation department for disposal. After the above measures are taken, the solid waste of the project will not cause pollution to the surrounding environment.

2. Operation Phase

2.1 Air pollution

The exhaust gas produced by this project is mainly the exhaust gas of the generators and flare combustion. The exhaust gas from each generator and flare is respectively discharged through 6 exhaust cylinders with 15m high; the NO_x in the exhaust gas meets "Automotive Compression Ignition, Gas Fuel Ignition Engine and Automobile Exhaust Pollutant Emission Limits and Measurement Methods (Phase III, IV, V of China)" (GB17691-2005) air pollutant emission control requirements for China Phase IV (NO_x ≤3.5g/kWh); among them, soot and sulfur dioxide meet the "Boiler Air Pollutant Emission Standard" (GB13271 -2014) Gas-fired boiler standards in the air pollutant emission limits in Table 2 (particulate matter emission concentration <20mg/m^3, sulfur dioxide <50mg/m^3).

2.2 Wastewater

The wastewater is mainly domestic sewage and condensate. The domestic sewage of the project is pretreated in a septic tank and discharged together with the condensate into the leachate adjustment tank of the Maiyuan landfill site, and after being processed in the leachate treatment station, it reaches the standard of "Pollutant Control Standard for Domestic Waste Landfill" (GB16889-2008) in Table 2. After entering the Honggutan Wastewater Treatment Plant for further treatment, and finally it will be transferred to the north branch of Ganjiang River. It has little influence on the receiving water body.

2.3 Noise

According to the prediction results, the acoustic environment quality of the project equipment noise transmitted to the east, south, west and North boundary of Maiyuan landfill site can meet the Class 2 Zone standards of "Environmental Noise Emission Standard of Industrial Enterprise Boundary" (GB12348-2008). The nearest sensitive point around the project is the Shuangling Village Committee, which is 280m away. The noise prediction value of the Shuangling Village Committee can meet the Class 2 standard of "Acoustic Environmental Quality Standard" (GB3096-2008) day and night. Therefore, the noise of this project has little impact on the external environment.

2.4 Solid waste

The solid waste of the project is mainly domestic garbage, filtered dust, waste filter core and waste minerals. The domestic garbage and filtered dust are collected uniformly and then sent to maiyuan landfill site for landfill treatment. The waste filter core shall be recycled by the manufacturer regularly.

Hazardous waste: The waste mineral oil generated by the generator set shall be properly collected and stored in the hazardous waste temporary deposit, and shall be submitted to the relevant qualified units for centralized treatment regularly.

In conclusion, the environmental impact during the project construction will be temporary and not significant, and the environmental impact during the project operation will be minor. The

project activity can reduce greenhouse gas emissions and environmental pollution caused by methane release and coal-fired power generation. The Project owner takes appropriate measures to minimize adverse environmental impacts.

2.4 Public Comments

This project will open for public comment on the verra website.

2.5 AFOLU-Specific Safeguards

NA.

3 APPLICATION OF METHODOLOGY

3.1 Title and Reference of Methodology

The approved consolidated methodology applied in the project activity is ACM0001 –"Flaring or use of landfill gas" (version 19.0).

This methodology also refers to the latest approved version of the following tools:

"Emissions from solid waste disposal sites" (version 08.0);

"Tool to calculate the emission factor for an electricity system" (version 07.0);

"Baseline, project and/or leakage emissions from electricity consumption and monitoring of electricity generation" (version 03.0);

"Tool to determine the mass flow of a greenhouse gas in a gaseous stream" (version 03.0);

"Positive lists of technologies" (version 02.0).

For more detail information about the methodology and tools, please reference to the following link: https://cdm.unfccc.int/methodologies/DB/JPYB4DYQUXQPZLBDVPHA87479EMY9M

3.2 Applicability of Methodology

The project satisfies all the applicability criteria of the methodology ACM0001 (Version 19.0), of which the detailed description is listed in Table 3-1 below:

Table 3-1 Applicability of ACM0008

No.	Applicability conditions in ACM0001	The project

1	The methodology is applicable under the following conditions: (a) Install a new LFG capture system in an existing or new (Greenfield) SWDS where no LFG capture system was or would have been installed prior to the implementation of the project activity; or; (b) Make an investment into an existing LFG capture system to increase the recovery rate or change the use of the captured LFG, provided that: (i) The captured LFG was vented or flared and not used prior to the implementation of the project activity; and (ii) In the case of an existing active LFG capture system for which the amount of LFG cannot be collected separately from the project system after the implementation of the project activity and its efficiency is not impacted on by the project system: historical data on the amount of LFG capture and flared is available; (c) Flare the LFG and/or use the captured LFG in any (combination) of the following ways: (i) Generating electricity; (ii) Generating heat in a boiler, air heater or kiln (brick firing only) or glass melting furnace; and/or (iii) Supplying the LFG to consumers through a natural gas distribution network; (iv) Supplying compressed/liquefied LFG to consumers using trucks; (v) Supplying the LFG to consumers through a dedicated pipeline;	Applicable. Before the implementation of the project activity, there was a LFG project named "Nanchang Maiyuan Landfill Gas Recovery and Utilisation Project" existed in the landfill. The proposed VCS project is designed and constructed by the project owner to capture and utilized the landfill gas that the existing LFG project has not captured and emitted into the atmosphere directly for power generation. The electricity generated by the project is supplied to Central China Power Grid (CCPG). The new and independent gas extraction and utilization systems will be installed by the project. The amount of LFG by the project can be collected separately from the project system. Therefore, the project is applicable to condition of (b)

	(d) Do not reduce the amount of organic waste that would be recycled in the absence of the project activity.	
2	The methodology is only applicable if the application of the procedure to identify the baseline scenario confirms that the most plausible baseline scenario is: (a) Atmospheric release of the LFG or capture of LFG and destruction through flaring to comply with regulations or contractual requirements, to address safety and odour concerns, or for other reasons; and (b) In the case that the LFG is used in the project activity for generating electricity and/or generating heat in a boiler, air heater, glass melting furnace or kiln: (i) For electricity generation: that electricity would be generated in the grid or in captive fossil fuel fired power plants; and/or (ii) For heat generation: that heat would be generated using fossil fuels in equipment located within the project boundary; (c) In the case of LFG supplied to the end-user(s) through natural gas distribution network, trucks or the dedicated pipeline, the baseline scenario is assumed to be displacement of natural gas. (d) In the case of LFG from a Greenfield SWDS, the identified baseline scenario is atmospheric release of the LFG or capture of LFG in a managed SWDS and destruction through flaring to comply with regulations or contractual requirements, to address safety and odour concerns, or for other reasons.	Applicable. Based on the analysis in Section 3.4, the most feasible baseline. scenario of the project is as follows: Atmospheric release of the LFG that not captured and utilized by the existing LFG project; and for electricity generation: that electricity would be generated in the grid.
3	This methodology is not applicable: (a) In combination with other approved methodologies. For instance, ACM0001	NA.

	cannot be used to claim emission reductions for the displacement of fossil fuels in a kiln or glass melting furnace, where the purpose of the CDM project activity is to implement energy efficiency measures at a kiln or glass melting furnace; (b) If the management of the SWDS in the project activity is deliberately changed during the crediting in order to increase methane generation compared to the situation prior to the implementation of the project activity.	Only ACM0001 is applied in the project. The management of the SWDS in the project activity will not be deliberately changed during the crediting in order to increase methane generation compared to the situation prior to the implementation of the project activity.

In addition, the project meets the applicability conditions of the applied tools applied in the PD as follows:

Table 3-2 Applicability of applied tools

Tool	Applicability	The project
Emissions from solid waste disposal sites (version 08.0)	The tool can be used to determine emissions for the following types of applications: (a) Application A: The CDM project activity mitigates methane emissions from a specific existing SWDS. Methane emissions are mitigated by capturing and flaring or combusting the methane (e.g. "ACM0001: Flaring or use of landfill gas"). The methane is generated from waste disposed in the past, including prior to the start of the CDM project activity. In these cases, the tool is only applied for an ex ante estimation of emissions in the project design document (CDM-PDD). The emissions will then be monitored during the crediting period using the applicable approaches in the relevant methodologies (e.g. measuring the amount of	Applicable. The project is the condition of application A, that mitigates methane emissions from a specific existing SWDS by capturing and combusting for power.

	methane captured from the SWDS); (b) Application B: The CDM project activity avoids or involves the disposal of waste at a SWDS. An example of this application of the tool is ACM0022, in which municipal solid waste (MSW) is treated with an alternative option, such as composting or anaerobic digestion, and is then prevented from being disposed of in a SWDS. The methane is generated from waste disposed or avoided from disposal during the crediting period. In these cases, the tool can be applied for both ex ante and ex post estimation of emissions. These project activities may apply the simplified approach detailed in 0 when calculating baseline emissions.	
Tool to calculate the emission factor for an electricity system (version 07.0)	This tool may be applied to estimate the OM, BM and/or CM when calculating baseline emissions for a project activity that substitutes grid electricity that is where a project activity supplies electricity to a grid or a project activity that results in savings of electricity that would have been provided by the grid (e.g. demand-side energy efficiency projects)	Applicable. The project utilizes the LFG for power generation to supply electricity to CCPG that dominated by fossil-fuel plants. Therefore the tool is applied to estimated the OM, BM and /or CM when calculating baseline emissions for the project.
	Under this tool, the emission factor for the project electricity system can be calculated either for grid power plants only or, as an option, can include off-grid power plants. In the latter case, two sub-	In the host country as off-grid power generation is not significant. Therefore, emission factor for the project electricity system is calculated only for the grid

	options under the step 2 of the tool are available to the project participants, i.e. option II a and option II b. If option II a is chosen, the conditions specified in "Appendix 1: Procedures related to off-grid power generation" should be met. Namely, the total capacity of off-grid power plants (in MW) should be at least 10 per cent of the total capacity of grid power plants in the electricity system; or the total electricity generation by off-grid power plants (in MWh) should be at least 10 per cent of the total electricity generation by grid power plants in the electricity system; and that factors which negatively affect the reliability and stability of the grid are primarily due to constraints in generation and not to other aspects such as transmission capacity.	power plants. Thus, this applicability criterion is satisfied.
	In case of CDM projects the tool is not applicable if the project electricity system is located partially or totally in an Annex I country.	Applicable. The project electricity system is located in a non-Annex I country.
	Under this tool, the value applied to the CO_2 emission factor of biofuels is zero.	The project is not involved in biofuels.
Baseline, project and/or leakage emissions from electricity consumption and monitoring of electricity generation (version 03.0)	If emissions are calculated for electricity consumption, the tool is only applicable if one out of the following three scenarios applies to the sources of electricity consumption: (a) Scenario A: Electricity consumption from the grid. The	Applicable. The source of electricity consumption of the project is Scenario A: Electricity consumption from the grid

	electricity is purchased from the grid only, and either no captive power plant(s) is/are installed at the site of electricity consumption or, if any captive power plant exists on site, it is either not operating or it is not physically able to provide electricity to the electricity consumer; (b) Scenario B: Electricity consumption from (an) off-grid fossil fuel fired captive power plant(s). One or more fossil fuel fired captive power plants are installed at the site of the electricity consumer and supply the consumer with electricity. The captive power plant(s) is/are not connected to the electricity grid; or (c) Scenario C: Electricity consumption from the grid and (a) fossil fuel fired captive power plant(s). One or more fossil fuel fired captive power plants operate at the site of the electricity consumer. The captive power plant(s) can provide electricity to the electricity consumer. The captive power plant(s) is/are also connected to the electricity grid. Hence, the electricity consumer can be provided with electricity from the captive power plant(s) and the grid.	
	This tool can be referred to in methodologies to provide procedures to monitor amount of electricity generated in the project scenario, only if one out of the following three project scenarios applies to the recipient of the electricity generated:	Applicable. The electricity generated by the project is supplied to the CCPG (Scenario I).

	(a) Scenario I: Electricity is supplied to the grid; (b) Scenario II: Electricity is supplied to consumers/electricity consuming facilities; or (c) Scenario III: Electricity is supplied to the grid and consumers/electricity consuming facilities.	
	This tool is not applicable in cases where captive renewable power generation technologies are installed to provide electricity in the project activity, in the baseline scenario or to sources of leakage. The tool only accounts for CO_2 emissions.	NA. No captive renewable power generation technologies are installed to provide electricity in the project activity, in the baseline scenario or to sources of leakage.
Tool to determine the mass flow of a greenhouse gas in a gaseous stream" (version 03.0)	Typical applications of this tool are methodologies where the flow and composition of residual or flared gases or exhaust gases are measured for the determination of baseline or project emissions.	Application. The volumetric flow of the gaseous stream and volumetric fraction of greenhouse gas CH_4 will be measured by the project.
	Methodologies where CO_2 is the particular and only gas of interest should continue to adopt material balances as the means of flow determination and may not adopt this tool as material balances are the cost effective way of monitoring flow of CO_2.	NA. For the project, CO_2 is not the particular and only gas. The CH_4 is the main gas in the landfill gas for the project.
	The underlying methodology should specify: (a) The gaseous stream the tool should be applied to; (b) For which greenhouse gases the mass flow should be determined;	Application The methodology has specified (a) to (d).

	(c) In which time intervals the flow of the gaseous stream should be measured; and (d) Situations where the simplification offered for calculating the molecular mass of the gaseous stream (equations (3) or (17)) is not valid (such as the gaseous stream is predominantly composed of a gas other than N_2).	
Positive lists of technologies (version 02.0).	The use of this methodological tool is not mandatory for the project participants of a CDM project activity or CDM PoA for demonstrating their additionality.	Application The project selects to use the tool to demonstrating the additionality.
	This methodological tool shall be applied in conjunction with a small-scale or large-scale methodology which refers to this tool.	Application The methodology ACM0001 (version 19.0) refers to the methodological tool.
	The positive lists as contained in section 5 of this tool are valid up to 28 November 2021. Notwithstanding the provisions on the validity of new, revised and previous versions of methodologies and methodological tools in the "Procedure: Development, revision and clarification of baseline and monitoring methodologies and methodological tools", there will be no grace period for the application of this tool and the validity of the positive list after this date, including in cases	Application Prior to the implementation of the project activities, the landfill gas (LFG) was only vented and/or flared, but not utilized for energy generation, and that under the project activity, the LFG is used to generate electricity in one power plant with a total nameplate capacity of 6.4 02MW.

	where further technologies are added to the positive list through revisions of this tool before this date.	

3.3 Project Boundary

According to the methodology ACM0001, the project boundary is the site of the project activity where the LFG is captured and destroyed/used, Nanchang Maiyuan Landfill site.

Referring to the methodology,

(a) Captive power plant(s) (including emergency diesel generators) or power generation sources connected to the grid, which are supplying electricity to the project activity;

(b)Captive power plant(s) (including emergency diesel generators) or power generation sources connected to the grid, which are supplying electricity in the baseline that is displaced by electricity generated by captured LFG in the project activity;

In the project case, the electricity for the project is sourced from CCPG and electricity generated by the LFG captured would have been generated by power generation sources connected to CCPG. Therefore, the project boundary includes the whole LFG related system (e.g. LFG collection, LFG pre-treatment system, LFG power generation system, etc.) and all grid-connected power plants in CCPG.

According to authoritative documents provided by China DNA, CCPG covers Henan Province, Hubei Province, Hunan Province, Jiangxi Province, Sichuan Province, and Chongqing City. The project boundary is shown in Figure 3 below.

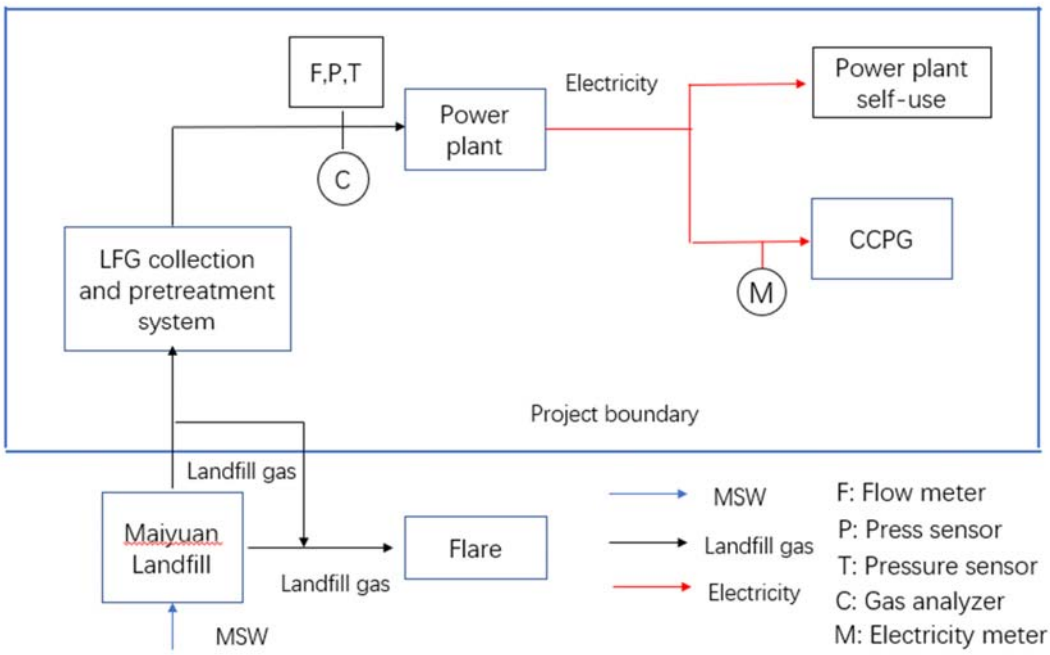

Figure 3-1 Diagram of the project boundary

The main emission sources and gases included in the project boundary are listed in Table 3-3 below:

Table 3-3 Emission sources included in or excluded from the project boundary

Source		Gas	Included?	Justification/Explanation
Baseline scenario	Emissions from decomposition of waste at the SWDS site	CO_2	No	CO_2 emissions from decomposition of organic waste are not accounted since the CO_2 is also released under the project activity
		CH_4	Yes	The major source of emissions in the baseline
		N_2O	No	N_2O emissions are small compared to CH4 emissions from SWDS. This is conservative
	Emissions from electricity generation	CO_2	Yes	Major emission source

		CH_4	No	Excluded for simplification. This is conservative
		N_2O	No	Excluded for simplification. This is conservative
	Emissions from heat generation	CO_2	No	No heat generation is included in the project activity.
		CH_4	No	Excluded for simplification. This is conservative
		N_2O	No	Excluded for simplification. This is conservative
	Emissions from the use of natural gas	CO_2	No	Excluded for simplification. This is conservative
		CH_4	No	No supply of LFG through a natural gas distribution network, dedicated pipeline or using trucks is included in the project activity
		N_2O	No	Excluded for simplification. This is conservative
Project scenario	Emissions from fossil fuel consumption for purposes other than electricity generation or transportation due to the project activity	CO_2	No	Excluded for no fossil fuel is used by the project activity.
		CH_4	No	Excluded for simplification. This emission source is assumed to be very small
		N_2O	No	Excluded for simplification. This emission source is assumed to be very small
	Emissions from electricity consumption due to the project	CO_2	Yes	May be an important emission source
		CH_4	No	Excluded for simplification. This emission source is assumed to be very small

	activity	N_2O	No	Excluded for simplification. This emission source is assumed to be very small.
	Emissions from flaring	CO_2	No	Emissions are considered negligible
		CH_4	Yes	May be an important emission source
		N_2O	No	Emissions are considered negligible
	Emissions from distribution of LFG using trucks and dedicated pipelines	CO_2	No	No distribution of LFG using trucks and dedicated pipelines
		CH_4	No	No distribution of LFG using trucks and dedicated pipelines
		N_2O	No	Emissions are considered negligible

3.4 Baseline Scenario

The simplified procedures in the methodology is applied in the project to select the most plausible baseline scenario and demonstrate additionality. According to the methodology, the baseline scenario for LFG is assumed to be the atmospheric release of the LFG; with all the electricity generated by the project activity is exported to the grid, the baseline scenario for all the electricity exported to the grid is assumed to be electricity generation in existing and/or new grid-connected power plants.

3.5 Additionality

For the simplified procedure to demonstrate additionality, the methodological tool "TOOL32: Positive lists of technologies" (version 02.0) is applied in the project. According to the descriptions above, it is demonstrated that prior to the implementation of the project, the LFG was only vented, and the LFG is used to generate electricity in the project plant with a total

nameplate capacity of 6.402 MW, i.e. below 10 MW, therefore, the project is deemed automatically additional.

3.6 Methodology Deviations

There is no methodology deviations for the project.

4 QUANTIFICATION OF GHG EMISSION REDUCTIONS AND REMOVALS

4.1 Baseline Emissions

According to the methodology ACM0001 (V19.0), baseline emissions are determined according to equation (1) and comprise the following sources:

$$BE_y = BE_{CH4,y} + BE_{EC,y} + BE_{HG,y} + BE_{NG,y} \quad (1)$$

Where:

BE_y	=	Baseline emissions in year *y* (t CO_2e/yr)
$BE_{CH4,y}$	=	Baseline emissions of methane from the SWDS in year *y* (t CO_2e/yr)
$BE_{EC,y}$	=	Baseline emissions associated with electricity generation in year *y* (t CO_2/yr)
$BE_{HG,y}$	=	Baseline emissions associated with heat generation in year *y* (t CO_2/yr)
$BE_{NG,y}$	=	Baseline emissions associated with natural gas use in year *y* (t CO_2/yr)

The project is not involved in heat generation and natural gas use, thus, the baseline emissions is calculated as follows:

$$BE_y = BE_{CH4,y} + BE_{EC,y} \quad (2)$$

Baseline emissions of methane from the SWDS ($BE_{CH4,y}$)

Baseline emissions of methane from the SWDS are determined as follows, based on the amount of methane that is captured under the project activity and the amount that would be captured and destroyed in the baseline (such as due to regulations). In addition, the effect of methane oxidation that is present in the baseline and absent in the project is taken into account:

$$BE_{CH4,y} = \left(\left(1 - OX_{top_layer}\right) \times F_{CH4,PJ,y} - F_{CH,BL,y}\right) \times GWP_{CH4} \quad (3)$$

Where:

$BE_{CH4,y}$	=	Baseline emissions of methane from the SWDS in year *y* (t CO_2e/yr)
OX_{top_layer}	=	Fraction of methane in the LFG that would be oxidized in the top layer of the SWDS in the baseline (dimensionless)
$F_{CH4,PJ,y}$	=	Amount of methane in the LFG which is flared and/or used in the project activity in year *y* (t CH_4/yr)
$F_{CH4,BL,y}$	=	Amount of methane in the LFG that would be flared in the baseline in year *y* (t CH_4/yr)
GWP_{CH4}	=	Global warming potential of CH_4 (t CO_2e/t CH_4)

Ex post determination of $F_{CH4,PJ,y}$

During the crediting period, $F_{CH4,PJ,y}$ is determined as the sum of the quantities of methane flared and used in power plant(s), boiler(s), air heater(s), glass melting furnace(s), kiln(s) and natural gas distribution, as follows:

$$F_{CH4,PJ,y} = F_{CH4,flared,y} + F_{CH4,EL,y} + F_{CH4,HG,y} + F_{CH4,NG,y} \qquad (4)$$

Where:

$F_{CH4,PJ,y}$	=	Amount of methane in the LFG which is flared and/or used in the project activity in year *y* (t CH_4/yr)
$F_{CH4,flared,y}$	=	Amount of methane in the LFG which is destroyed by flaring in year *y* (t CH_4/yr)
$F_{CH4,EL,y}$	=	Amount of methane in the LFG which is used for electricity generation in year *y* (t CH_4/yr)
$F_{CH4,HG,y}$	=	Amount of methane in the LFG which is used for heat generation in year *y* (t CH_4/yr)
$F_{CH4,NG,y}$	=	Amount of methane in the LFG which is sent to the natural gas distribution network and/or dedicated pipeline and/or to the trucks in year *y* (t CH_4/yr)

The project is not involved in heat generation and natural gas use, thus,

$$F_{CH4,PJ,y} = F_{CH4,flared,y} + F_{CH4,EL,y} \qquad (5)$$

$F_{CH4,EL,y}$ is determined using the "Tool to determine the mass flow of a greenhouse gas in a gaseous stream" and monitoring the working hours of the power plant(s), boiler(s), air heater(s), glass melting furnace(s) and kiln(s), so that no emission reduction are claimed for methane destruction during non-working hours. This is taken into account by monitoring the hours that the equipment utilizing the LFG is operating in year *y* ($Op_{j,h,y}$).

The following requirements apply:

(a) As per the gaseous stream tool, if the LFG is used for multiple purposes (e.g. flaring or energy generation), and all methane destruction devices are verified to be operational (e.g. by means of flame detectors records, energy generated), a single flow meter may be used to record the flow into multiple destruction devices. The destruction efficiency of the least

efficient among the destruction devices shall be used as the destruction efficiency for all destruction devices monitored by this flow meter. If there are any periods for which one or more destruction devices are not operational, paragraph 5 (a) and (b) of the Appendix of the "Tool to determine the mass flow of a greenhouse gas in a gaseous stream" tool shall be followed;

(b) CH_4 is the greenhouse gas for which the mass flow should be determined;

(c) The simplification offered for calculating the molecular mass of the gaseous stream is valid (equations (3) or (17) in the tool);

(d) The mass flow should be calculated on an hourly basis for each hour *h* in year *y*;

(e) The mass flow calculated for hour *h* is 0 if the equipment is not working in hour *h* ($Op_{j,h}$=not working), the hourly values are then summed to a yearly unit basis.

Since the flow meter of this project is installed at the back end of pretreatment, the monitored flow rate and methane content of the landfill gas after dehydration treatment and filtration are all in the dry base state, therefore, Option A in the "Tool to determine the mass flow of a greenhouse gas in a gaseous stream" (version 03.0) is applied to determine the parameter of $F_{CH4,EL,y}$.

Option A

Flow measurement on a dry basis is not doable for a wet gaseous stream. In order to determine that the landfill gas is in a dry state, the following way is selected by the project:

(b) Demonstrate that the temperature of the gaseous stream (T_t) is less than 60°C (333.15 K) at the flow measurement point.

For this project, there is only methane as a greenhouse gas in landfill gas. On a dry basis, the calculation formula for methane mass flow is as follows:

$$F_{i,t} = V_{t,db} \times v_{i,t,db} \times \rho_{i,t} \qquad (6)$$

With:

$$\rho_{i,t} = \frac{P_t \times MM_i}{R_u \times T_t} \qquad (7)$$

Where:

$F_{i,t}$	=	Mass flow of greenhouse gas i in the gaseous stream in time interval t (kg gas/h)
$V_{t,db}$	=	Volumetric flow of the gaseous stream in time interval t on a dry basis (m^3 dry gas/h)
$v_{i,t,db}$	=	Volumetric fraction of greenhouse gas i in the gaseous stream in a time interval t on a dry basis (m^3 gas i/m^3 dry gas)

$\rho_{i,t}$	=	Density of greenhouse gas i in the gaseous stream in time interval t (kg gas i/m³ gas i)
P_t	=	Absolute pressure of the gaseous stream in time interval t (Pa)
MM_i	=	Molecular mass of greenhouse gas i (kg/kmol)
R_u	=	Universal ideal gases constant (Pa.m³ /kmol.K)
T_t	=	Temperature of the gaseous stream in time interval t (K)

Amount of methane in the LFG which is destroyed by flaring ($F_{CH4,flared,y}$)

$F_{CH4,flared,y}$ is determined as the difference between the amount of methane supplied to the flare(s) and any methane emissions from the flare(s), as follows:

$$F_{CH4,flared,y} = F_{CH4,sent_flare,y} - \frac{PE_{flare,y}}{GWP_{CH4}} \qquad (8)$$

Where:

$F_{CH4,flared,y}$	=	Amount of methane in the LFG which is destroyed by flaring in year *y* (t CH_4/yr)
$F_{CH4,sent_flare,y}$	=	Amount of methane in the LFG which is sent to the flare in year *y* (t CH_4/yr)
$PE_{flare,y}$	=	Project emissions from flaring of the residual gas stream in year *y* (t CO_2e/yr)
GWP_{CH4}	=	Global warming potential of CH_4 (t CO_2e/t CH_4)

To be conservative, emission reductions sourced from methane destroyed by flaring will not be claimed by the project.

Ex ante estimation of $F_{CH4,PJ,y}$

An ex ante estimate of $F_{CH4,PJ,y}$ is required to estimate baseline emission of methane from the SWDS in order to estimate the emission reductions of the proposed project activity in the VCS-PD. It is determined as follows:

$$F_{CH4,PJ,y} = \eta_{PJ} \times BE_{CH4,SWDS,y}/GWP_{CH4} \qquad (9)$$

Where:

$F_{CH4,PJ,y}$	=	Amount of methane in the LFG which is flared and/or used in the project activity in year y (t CH_4/yr)
$BE_{CH4,SWDS,y}$	=	Amount of methane in the LFG that is generated from the SWDS in the baseline scenario in year y (t CO_2e/yr)

η_{PJ}	=	Efficiency of the LFG capture system that will be installed in the project activity
GWP_{CH4}	=	Global warming potential of CH_4 (t CO_2e/t CH_4)

$BE_{CH4,SWDS,y}$ is determined using the methodological tool "Emissions from solid waste disposal sites" (version 08.0). The following guidance should be taken into account when applying the tool:

(f) f_y in the tool shall be assigned a value of 0 because the amount of LFG that would have been captured and destroyed is already accounted for in equation (2) of this methodology;

(g) In the tool, *x* begins with the year that the SWDS started receiving wastes (e.g. the first year of SWDS operation); and

(h) Sampling to determine the fractions of different waste types is not necessary because the waste composition can be obtained from previous studies.

The $BE_{CH4,SWDS,y}$ is calculated as follows:

$$BE_{CH4,SWDS,y} = \varphi_y \times (1 - f_y) \times GWP_{CH4} \times (1 - OX) \times \frac{16}{12} \times F \times DOC_{f,y} \times MCF_y \times \sum_{x=1}^{y} \sum_{j} \left(W_{j,x} \times DOC_j \times e^{-k_j \cdot (y-x)} \times (1 - e^{-k_j}) \right)$$

(10)

Where:

$BE_{CH4,SWDS,y}$	=	Baseline methane emissions occurring in year y generated from waste disposal at a SWDS during a time period ending in year y (t CO_2e/yr)
x	=	Years in the time period in which waste is disposed at the SWDS, extending from the first year in the time period (x = 1) to year y (x = y)
y	=	Year of the crediting period for which methane emissions are calculated (y is a consecutive period of 12 months)
$DOC_{f,y}$	=	Fraction of degradable organic carbon (DOC) that decomposes under the specific conditions occurring in the SWDS for year y (weight fraction)
$W_{j,x}$	=	Amount of solid waste type j disposed or prevented from disposal in the SWDS in the year x (t)
φ_y	=	Model correction factor to account for model uncertainties for year y
f_y	=	Fraction of methane captured at the SWDS and flared, combusted or used in another manner that prevents the emissions of methane to the atmosphere in year y
GWP_{CH4}	=	Global Warming Potential of methane
OX	=	Oxidation factor (reflecting the amount of methane from SWDS that is oxidized in the soil or other material covering the waste)
F	=	Fraction of methane in the SWDS gas (volume fraction)

MCF_y	=	Methane correction factor for year y
DOC_j	=	Fraction of degradable organic carbon in the waste type j (weight fraction)
k	=	Decay rate for the waste type j (1 / yr)
j	=	Type of residual waste or types of waste in the MSW

Determination of $F_{CH4,BL,y}$

This section provides a procedure to determine the amount of methane that would have been captured and destroyed (by flaring) in the baseline due to regulatory or contractual requirements, to address safety and odour concerns, or for other reasons (collectively referred to as requirement in this section). The four cases in Table 3 are distinguished. The appropriate case should be identified, and the corresponding instructions followed.

Table 4-1 Cases for determining methane captured and destroyed in the baseline

Situation at the start of the project activity	Requirement to destroy methane	Existing LFG capture and destruction system
Case 1	No	No
Case 2	Yes	No
Case 3	No	Yes
Case 4	Yes	Yes

According to the National standards and technical specifications "Domestic garbage Landfill Pollution Control Standards" (GB16889-1997), "Domestic garbage Sanitary Landfill Technical Specifications" (CJJ17-2004), in order to solve the landfill safety and odor problems, methane recovery and utilization is required. But the reality is that most landfill sites do not have landfill gas recovery and utilization devices. Meanwhile, the LFG capture and destruction system of the project will be newly installed, that is independent and separate to the existing LFG capture and destruction system. Therefore, this project is in line with case 2.

In this situation:

$$F_{CH4,BL,y} = F_{CH4,BL,R,y} \qquad (11)$$

$F_{CH4,BL,R,y}$ should be determined based on the information contained in the requirement to destroy methane, as follows:

(a) If the requirement specifies the amount of methane that must be flared then that amount is $F_{CH4,BL,R,y}$;

(b) If the requirement specifies a percentage of the captured LFG that is required to be flared, the amount shall be calculated as follows:

$$F_{CH4,BL,R,y} = \rho_{reg,y} \times F_{CH4,PJ,capt,y} \quad (12)$$

Where:

$F_{CH4,BL,R,y}$	=	Amount of methane in the LFG which is flared in the baseline due to a requirement in year *y* (t CH_4/yr)
$\rho_{reg,y}$	=	Fraction of LFG that is required to be flared due to a requirement in year *y*
$F_{CH4,PJ,capt,y}$	=	Amount of methane in the LFG which is captured in the project activity in year *y* (t CH_4/yr)

According to the methodology ACM0001 (version 19.0), If the requirement does not specify any amount or percentage of LFG that should be destroyed, but requires the installation of a system to capture and flare the LFG, then a typical destruction rate of 20 per cent is assumed

$$F_{CH4,BL,R,y} = 0.2 \times F_{CH4,PJ,capt,y} = 0.2 \times F_{CH4,PJ,y} \quad (13)$$

Baseline emissions associated with electricity generation ($BE_{EC,y}$)

The baseline emissions associated with electricity generation in year y ($BE_{EC,y}$) shall be calculated using the methodological tool "Baseline, project and/or leakage emissions from electricity consumption and monitoring of electricity generation". When applying the tool:

(a) The electricity sources *k* in the tool correspond to the sources of electricity generated identified in the selection of the most plausible baseline scenario; and

(b) $EC_{BL,k,y}$ in the tool is equivalent to the net amount of electricity generated using LFG in year *y* ($EG_{PJ,y}$).

According to methodological tool "Baseline, project and/or leakage emissions from electricity consumption and monitoring of electricity generation" (version 03.0),

$$BE_{EC,y} = \sum_{k} EC_{BL,k,y} \times EF_{EL,k,y} \times (1 + TDL_{k,y}) \quad (14)$$

Where:

$BE_{EC,y}$	=	Baseline emissions from electricity consumption in year y (t CO_2 / yr)
$EC_{BL,k,y}$	=	Quantity of electricity that would be consumed by the baseline electricity consumer k in year y (MWh/yr)
$EF_{EL,k,y}$	=	Emission factor for electricity generation for source k in year y (t CO_2/MWh)
$TDL_{k,y}$	=	Average technical transmission and distribution losses for providing electricity to source k in year y
k	=	Sources of electricity consumption in the baseline

According to the tool "Baseline, project and/or leakage emissions from electricity consumption and monitoring of electricity generation"(version 03.0), the project belongs to the case of Scenario A, use as default values of 3% for baseline emission, i.e , $TDL_{k,y}$ =3%.

Determination of the emission factor for electricity generation ($EF_{EL,k,y}$)
According to the tool "Baseline, project and/or leakage emissions from electricity consumption and monitoring of electricity generation"(version 03.0),for the project is in the case of Scenario A: Electricity consumption from the grid, the project participants choose Option A1: Calculate the combined margin emission factor of the applicable electricity system, using the procedures in the latest approved version of the "Tool to calculate the emission factor for an electricity system" (version 07.0) ($EF_{EL,k,y} = EF_{grid,CM,y}$).

According to "Tool to calculate the emission factor for an electricity system" (version 07.0). The following six steps are applied to determine OM, BM, and CM used for calculating the project baseline emissions:

Step 1. Identify the relevant electricity systems

According to the Tool to calculate the emission factor for an electricity system (Version 07.0), project participants may delineate the project electricity system using any of the following options:

Option 1. A delineation of the project electricity system and connected electricity systems published by the DNA or the group of the DNAs of the host country(ies), In case a delineation is provided by a group of DNAs, the same delineation should be used by all the project participants applying the tool in these countries;

Option 2. A delineation of the project electricity system defined by the dispatch area of the dispatch centre responsible for scheduling and dispatching electricity generated by the project activity. Where the dispatch area is controlled by more than one dispatch centre, i.e. layered dispatch area, the higher level area shall be used as a delineation of the project electricity system (e.g. where regional dispatch centres are required to comply with dispatch orders of the national dispatch centre then area controlled by the national dispatch centre shall be used);

Option 3. A delineation of the project electricity system defined by more than one independent dispatch areas, e.g. multi-national power pools.

The Chinese DNA has published a delineation of the project electricity system and connected electricity systems, Option 1 is applied for the project. According to the delineations, the Central China Power Grid (CCPG) is identified as the relevant electric power system of the project, which includes Henan Province, Hubei Province, Hunan Province, Jiangxi Province, Sichuan Province and Chongqing City Power Grids.

Step 2. Choose whether to include off-grid power plants in the project electricity system (optional)

Project participants may choose between the following two options to calculate the operating margin and build margin emission factor:

Option I: Only grid power plants are included in the calculation.

Option II: Both grid power plants and off-grid power plants are included in the calculation

Based on China's real situation, only grid power plants are included in the calculation.

Step 3. Select a method to determine the operating margin (OM)

The calculation of the operating margin emission factor ($EF_{grid,OM,y}$) is based on one of the following methods:

(a) Simple OM, or

(b) Simple adjusted OM, or

(c) Dispatch data analysis OM, or

(d) Average OM.

In China, specific data from the grid or each power plant is treated as business confidential and thus not public available. Therefore, method (b) and method (c) is not suitable for the project.

The Simple OM method (a) can only be applied when low-cost/must run resources2 constitute less than 50% of total grid generation in average of the five most recent years. According to the data from China Electric Power Yearbook 2012-2016, from year 2011 to year 2015, for the CCPG the project activity connected to, the low-cost/must-run electric power resources generation accounts for the total grid total are 33.85%, 40.70%, 39.13%, 45.07% and 47.01%, respectively, all lower than 50%, which satisfied the applicability of the method (a), therefore, the simple OM method is chosen for the calculation of the OM emission factor $EF_{grid,OM,y}$.

As per the latest version of "Tool to calculate the emission factor for an electricity system" (version 07.0), one of the following methods should be chosen to calculate the simple OM emission factor:

- Ex ante option: If the ex ante option is chosen, the emission factor is determined once at the validation stage, thus no monitoring and recalculation of the emissions factor during the crediting period is required. For grid power plants, use a 3-year generation-weighted average, based on the most recent data available at the time of submission of the VCS-PD to the DOE for validation, or
- Ex post option: If the ex post option is chosen, the emission factor is determined for the year in which the project activity displaces grid electricity, requiring the emissions factor to be updated annually during monitoring. If the data required calculating the emission factor for year y is usually only available later than six months after the end of year y, alternatively the emission factor of the previous year (y-1) may be used. If the data is usually only available 18 months after the end of year y, the emission factor of the year proceeding the previous year (y-2) may be used. The same data vintage (y, y-1 or y-2) should be used throughout all crediting periods.

Here the ex ante option is selected, and the $EF_{grid,OM}$ is fixed during the crediting period.

Step 4. Calculate the operating margin emission factor according to the selected method

[2] Low-cost/must-run resources are defined as power plants with low marginal generation costs or power plants that are dispatched independently of the daily or seasonal load of the grid. They typically include hydro, geothermal, wind, low-cost biomass, nuclear and solar generation. If coal is obviously used as must-run, it should also be included in this list, i.e. excluded from the set of plants.

Based on the analysis of the step 3, the simple OM method is used to calculate the NWCPG OM emission factor in this step. The simple OM emission factor is calculated as the generation-weighted average CO_2 emissions per unit net electricity generation (tCO_2/MWh) of all generating power plants serving the system, not including low-cost/must-run power plants/ units.

The simple OM may be calculated by one of the following two options:

Option A: Based on the net electricity generation and a CO_2 emission factor of each power unit; or

Option B: Based on the total net electricity generation of all power plants serving the system and the fuel types and total fuel consumption of the project electricity system.

For the project activity, the required data for the exercise of Option A is not available and those of Option B can be obtained from official sources, and off-grid power plants are not included in the calculation, therefore, Option B is chosen to calculate the operating margin emission factor:

For Option B, the Simple OM emission factor is calculated based on the net electricity supplied to the grid by all power plants serving the system, not including low-cost / must-run power plants / units, and based on the fuel type(s) and total fuel consumption of the project electricity system, as follows:

$$EF_{grid,\ OMsimple,\ y} = \frac{\sum_{i,} (FC_{i,y} \times NCV_{i,y} \times EF_{CO2,\ i,y})}{EG_y} \qquad (15)$$

Where:

$EF_{grid,OMsimple,y}$	= Simple operating margin CO_2 emission factor in year y (tCO_2 /MWh)
$FC_{i,y}$	= Amount of fuel type i consumed in the project electricity system in year y (mass or volume unit)
$NCV_{i,y}$	= Net calorific value (energy content) of fuel type i in year (GJ / mass or volume unit)
$EF_{CO2,i,y}$	= CO_2 emission factor of fuel type i in year y (tCO_2 /GJ)
EG_y	= Net electricity generated and delivered to the grid by all power sources serving the system, not including low-cost / must-run power plants / units, in year y (MWh)
i	= All fuel types combusted in power sources in the project electricity system in year y
y	= The three most recent years for which data is available at the time of submission of the CDM-PDD to the DOE for validation.

If available, $NCV_{i,y}$ and $EF_{CO2,i,y}$ from the fuel supplier of the power plants in invoices may be used; or, regional or national average default values may be used. In this PDD, $NCV_{i,y}$ of different fuels

are obtained from China Energy Statistical Yearbook 2016. Emission factors ($EF_{CO2,i,y}$) of each type of fossil fuel come from IPCC 2006 default values.

The Simple OM Emission Factor ($EF_{grid,OMsimple,y}$) of the project is calculated on the basis of the fuel consumption data for electricity generation of the Northwest China Power Grid, not including those of low-operating cost and must-run power plants, such as wind power, hydropower and nuclear etc. These data are obtained from the China Electric Power Yearbook (2014~2016, published annually) and China Energy Statistical Yearbook (2014~2016). Based on these data, the Simple OM Emission Factor ($EF_{grid,OMsimple,y}$) of the Central China Power Grid is calculated as 0.9014 tCO_2/MWh. Details of the calculations and the published data from the Chinese DNA[3], which uses official national statistics.

Step 5. Calculate the build margin (BM) emission factor

In terms of vintage of data, project participants can choose between one of the following two options:

Option 1: For the first crediting period, calculate the build margin emission factor ex ante based on the most recent information available on units already built for sample group m at the time of CDM-PDD submission to the DOE for validation. For the second crediting period, the build margin emission factor should be updated based on the most recent information available on units already built at the time of submission of the request for renewal of the crediting period to the DOE. For the third crediting period, the build margin emission factor calculated for the second crediting period should be used. This option does not require monitoring the emission factor during the crediting period.

Option 2: For the first crediting period, the build margin emission factor shall be updated annually, ex post, including those units built up to the year of registration of the project activity or, if information up to the year of registration is not yet available, including those units built up to the latest year for which information is available. For the second crediting period, the build margin emissions factor shall be calculated ex ante, as described in Option 1 above. For the third crediting period, the build margin emission factor calculated for the second crediting period should be used.

The PD chooses Option 1, which requires the project participant to calculate the Build Margin Emission Factor $EF_{grid,BM,y}$, ex-ante based on the most recent information available on units already built for sample group m at the time of PD submission.

The sample group of power units m used to calculate the build margin should be determined as per the following procedure, consistent with the data vintage selected above:

[3] "2017 Baseline Emission Factors for Regional Power Grids in China", http://www.mee.gov.cn/ywgz/ydqhbh/wsqtkz/index_1.shtml

(a) Identify the set of five power units, excluding power units registered as CDM project activities, that started to supply electricity to the grid most recently ($SET_{5\text{-units}}$) and determine their annual electricity generation ($AEG_{SET\text{-}5\text{-units}}$, in MWh);

(b) Determine the annual electricity generation of the project electricity system, excluding power units registered as CDM project activities (AEG_{total}, in MWh). Identify the set of power units, excluding power units registered as CDM project activities, that started to supply electricity to the grid most recently and that comprise 20 per cent of AEG_{total} (if 20 per cent falls on part of the generation of a unit, the generation of that unit is fully included in the calculation) ($SET_{\geq 20 \text{ per cent}}$) and determine their annual electricity generation ($AEG_{SET\text{-}\geq 20 \text{ per cent}}$, in MWh);
(c) From $SET_{5\text{-units}}$ and $SET_{\geq 20 \text{ per cent}}$ select the set of power units that comprises the larger annual electricity generation (SET_{sample});

Otherwise:

(d) Exclude from SET_{sample} the power units which started to supply electricity to the grid more than10 years ago. Include in that set the power units registered as CDM project activity, starting with power units that started to supply electricity to the grid most recently, until the electricity generation of the new set comprises 20 per cent of the annual electricity generation of the project electricity system (if 20 per cent falls on part of the generation of a unit, the generation of that unit is fully included in the calculation) to the extent is possible. Determine for the resulting set ($SET_{sample\text{-}CDM}$) the annual electricity generation ($AEG_{SET\text{-}sample\text{-}CDM}$, in MWh);

If the annual electricity generation of that set is comprises at least 20 per cent of the annual electricity generation of the project electricity system (i.e. $AEG_{SET\text{-}sample\text{-}CDM} \geq 0.2 \times AEG_{total}$), then use the sample group $SET_{sample\text{-}CDM}$ to calculate the build margin. Ignore steps (e) and (f).

Otherwise:

(e) Include in the sample group $SET_{sample\text{-}CDM}$ the power units that started to supply electricity to the grid more than 10 years ago until the electricity generation of the new set comprises 20 per cent of the annual electricity generation of the project electricity system (if 20 per cent falls on part of the generation of a unit, the generation of that unit is fully included in the calculation);

(f) The sample group of power units m used to calculate the build margin is the resulting set ($SET_{sample\text{-}CDM\text{->}10yrs}$).

However, in China, it is very difficult to obtain the data of the five existing power plants built most recently or the power plants capacity additions in the electricity system that comprise 20 per cent of the system generation (in MWh) and that were built most recently, since no data of plant specific generation and fossil fuel consumption is currently available in China. As none of the above options can be selected, the following deviations are adopted to calculate the BM[4]:

First, to calculate the newly added installed capacity and the contribution component of other various power generation technologies, then calculate of the weight of newly added installed

[4] http://cdm.unfccc.int/UserManagement/FileStorage/6POIAMGYOEDOTKW25TA20EHEKPR4DM

capacity of each power generation technology, and finally, to calculate BM emission factor using the commercially optimal efficiency level of each power generation technology.

According to the "Tool to calculate the emission factor for an electricity system", the build margin emissions factor ($EF_{grid,BM,y}$) is calculated as the generation-weighted average emission factor (tCO_2e/MWh) of all power units *m* during the most recent year *y* for which power generation data is available. The calculation equation is as follows:

$$EF_{grid,BM,y} = \frac{\sum_{m} EG_{m,y} \times EF_{EL,m,y}}{\sum_{m} EG_{m,y}} \qquad (16)$$

Where:

$EF_{grid,BM,y}$	= Build margin CO_2 emission factor in year y (tCO_2 /MWh)
$EG_{m,y}$	= Net quantity of electricity generated and delivered to the grid by power unit m in year *y* (MWh)
$EF_{EL,m,y}$	= CO_2 emission factor of power unit m in year y (tCO_2/MWh)
m	= Power units included in the build margin
y	= Most recent historical year for which electricity generation data is available

Since the generating capacity of coal-fired, oil-fired and gas-fired technologies can't be separated from the existing statistical data, the following measures are taken for the calculation:

First, based on the available data of the latest year, determine the ratio of CO_2 emissions from coal, oil, and gas consumption for power generation to the total CO_2 emission; Second, to calculate the emission factor of the thermal power based on the weight of CO_2 emission from coal, oil, and gas, and the emissions factors using commercial technologies with optimal efficiency. And finally, to multiply the thermal emission factor with the portion of the thermal power comprising 20 per cent of the newly added capacity.

Sub-step 5.1 *Calculate the proportion of CO_2 emission caused by solid, liquid and gas fuels in the total emission respectively:*

$$\lambda_{Coal,y} = \frac{\sum_{i \in COAL,j} F_{i,j,y} \times NCV_{i,y} \times EF_{co_2,i,j,y}}{\sum_{i,j} F_{i,j,y} \times NCV_{i,y} \times EF_{co_2,i,j,y}} \qquad (17)$$

$$\lambda_{Oil,y} = \frac{\sum_{i \in OIL,j} F_{i,j,y} \times NCV_{i,y} \times EF_{co_2,i,j,y}}{\sum_{i,j} F_{i,j,y} \times NCV_{i,y} \times EF_{co_2,i,j,y}} \qquad (18)$$

$$\lambda_{Gas,y} = \frac{\sum_{i \in GAS,j} F_{i,j,y} \times NCV_{i,y} \times EF_{co_2,i,j,y}}{\sum_{i,j} F_{i,j,y} \times NCV_{i,y} \times EF_{co_2,i,j,y}}$$

(19)

Where:

$F_{i,j,y}$	= The amount of fuel i (in a mass or volume unit) consumed by province j in year(s) y
$NCV_{i,y}$	= The net calorific value of the fuel type i in year y (GJ/mass or volume unit)
$EF_{CO2,i,j,y}$	= The CO_2 emission factor of fuel type i in year y (tCO_2/GJ)

Coal, Oil and Gas refer to the group of solid, liquid, and gaseous fossil fuels, respectively.

Sub-step 5.2 *Calculate the emission factor of thermal power generation*

$$EF_{Thermal,y} = \lambda_{Coal,y} \times EF_{Coal,Adv,y} + \lambda_{Oil,y} \times EF_{Oil,Adv,y} + \lambda_{Gas,y} \times EF_{Gas,Adv,y} \quad (20)$$

Where:

$EF_{Coal,Adv,y}$, $EF_{Oil,Adv,y}$ and $EF_{Gas,Adv,y}$ refer to the emission factors representing best technologies commercially available for coal, oil and gas fired power plants, respectively.

Sub-step 5.3 *Calculate BM of the grid*

$$EF_{grid,BM,y} = \frac{CAP_{Thermal,y}}{CAP_{Total,y}} \times EF_{Thermal,y} \quad (21)$$

Where:

$CAP_{Total,y}$	= The total newly added electricity generation capacity (MW)
$CAP_{Thermal,y}$	= The newly added electricity generation capacity of thermal power (MW)

Key parameters used to calculate BM emission factor include the low calorific value of each fossil fuel, the oxidation rate, the potential emission factors, and the efficiency of various power generation technologies. The data of low calorific value of each fossil fuel and their oxidation rate comes from China Energy Statistical Yearbook 2016. The potential emission factors are sourced from *"2006 IPCC Guidelines for National Greenhouse Gas Inventories"* Table 1.3 and Table 1.4 of Page 1.21-1.24 in Chapter one, Volume 2 Energy. According to the latest and available data at the time of this PD submission, $EF_{grid,BM,y}$ is calculated to be 0.3112 tCO_2/MWh.

Step 6. Calculate the combined margin (CM) emission factor

As per the "tool to calculate the emission factor for an electricity system", the combined margin emission factor ($EF_{grid,CM,y}$) is calculated based on one of the following methods:

(a) Weighted average CM; or

(b) Simplified CM.

The weighted average CM method (option A) should be used as the preferred option.

The simplified CM method (option b) can only be used if:

The project activity is located in: (i) a Least Developed Country (LDC); or in (ii) a country with less than 10 registered CDM projects at the starting date of validation; or (iii) a Small Island Developing States (SIDS); and

The data requirements for the application of step 5 above cannot be met.

The PD choose option A.

The combined margin emissions factor is calculated as follows:

$$EF_{grid,CM,y} = \omega_{OM} \times EF_{grid,OM,y} + \omega_{BM} \times EF_{grid,BM,y} \quad (22)$$

Where,

$EF_{grid,BM,y}$	= Build margin CO_2 emission factor in year y (tCO_2/MWh)
$EF_{grid,OM,y}$	= Operating margin CO_2 emission factor in year y (tCO_2/MWh)
ω_{OM}	= Weighting of operating margin emissions factor (per cent)
ω_{BM}	= Weighting of build margin emissions factor (per cent)

The combined margin emissions factor $EF_{grid,CM,y}$ should be calculated as the weighted average of the Operating Margin emission factor ($EF_{grid,OM,y}$) and the Build Margin emission factor ($EF_{grid,BM,y}$), where ω_{OM} = 0.5 and ω_{BM} = 0.5 for all other projects (owing to their intermittent and non-dispatchable nature) for the first crediting period and ω_{OM}=0.25 and ω_{BM} =0.75 for the second and third crediting period.

For the project, the weight ω_{OM} and ω_{BM} are both 0.5 by default for the fixed crediting period. Thus, $EF_{grid,CM,y}$=0.9014 tCO_2/MWh *0.5+0.3112 tCO_2/MWh *0.5 = 0.6063 (tCO_2/MWh)

4.2 Project Emissions

Project emissions are calculated as follows:

$$PE_y = PE_{EC,y} + PE_{FC,y} + PE_{DT,y} + PE_{SP,y} \quad (23)$$

Where:

PE_y	=	Project emissions in year *y* (t CO_2/yr)
$PE_{EC,y}$	=	Emissions from consumption of electricity due to the project activity in year *y* (t CO_2/yr)

$PE_{FC,y}$	=	Emissions from consumption of fossil fuels due to the project activity, for purpose other than electricity generation, in year *y* (t CO_2/yr)
$PE_{DT,y}$	=	Emissions from the distribution of compressed/liquefied LFG using trucks, in year *y* (t CO_2/yr)
$PE_{SP,y}$	=	Emissions from the supply of LFG to consumers through a dedicated pipeline, in year *y* (t CO_2/yr)

The project is only included the emissions from consumption of electricity, not involved in the emissions from consumption of fossil fuels, the distribution of compressed/liquefied LFG using trucks and the supply of LFG to consumers through a dedicated pipeline, thus,

$$PE_y = PE_{EC,y} \qquad (24)$$

The project emissions from consumption of electricity by the project activity ($PE_{EC,y}$) shall be calculated using the methodological tool" Baseline, project and/or leakage emissions from electricity consumption and monitoring of electricity generation". The calculation equation is as follows:

$$PE_{EC,y} = \sum_j EC_{PJ,j,y} \times EF_{EL,j,y} \times (1 + TDL_{j,y}) \qquad (25)$$

Where:

$PE_{EC,y}$	=	Project emissions from electricity consumption in year y (t CO_2 / yr)
$EC_{PJ,j,y}$	=	Quantity of electricity consumed by the project electricity consumption source j in year y (MWh/yr)
$EF_{EL,j,y}$	=	Emission factor for electricity generation for source j in year y (t CO_2/MWh)
$TDL_{j,y}$	=	Average technical transmission and distribution losses for providing electricity to source j in year y
j	=	Sources of electricity consumption in the project

As stated above, according to the tool "Baseline, project and/or leakage emissions from electricity consumption and monitoring of electricity generation"(version 03.0), for the project is in the case of Scenario A: Electricity consumption from the grid, the project participants choose Option A1: Calculate the combined margin emission factor of the applicable electricity system, using the procedures in the latest approved version of the "Tool to calculate the emission factor for an electricity system" (version 07.0) ($EF_{EL,j,y} = EF_{grid,CM,y}$).

According to the tool "Baseline, project and/or leakage emissions from electricity consumption and monitoring of electricity generation"(version 03.0), the project belongs to the case of Scenario A, use as default values of 20% for project emission, i.e , $TDL_{j,y}$ =3%.

$EC_{PJ,j,y}$ is ex ante determined as 0 in the PD, and will be monitored ex post in the verification period.

4.3 Leakage

No leakage effects are accounted for under this methodology.

4.4 Net GHG Emission Reductions and Removals

1. Calculation of the baseline emissions

The baseline emissions are calculated as follows:

$$BE_y = BE_{CH4,y} + BE_{EC,y}$$

1.1 Baseline emissions of methane from the SWDS ($BE_{CH4,y}$)

As described in 4.1, $BE_{CH4,y}$ is ex ante determined as the following equations:

$$BE_{CH4,y} = \left(\left(1 - OX_{top_layer}\right) \times F_{CH4,PJ,y} - F_{CH,BL,y}\right) \times GWP_{CH4} \ .$$

$$F_{CH4,PJ,y} = \eta_{PJ} \times BE_{CH4,SWDS,y}/GWP_{CH4}$$

$$BE_{CH4,SWDS,y} = \varphi_y \times (1 - f_y) \times GWP_{CH4} \times (1 - OX) \times \frac{16}{12} \times F \times DOC_{f,y} \times MCF_y \times \sum_{x=1}^{y} \sum_{j} \left(W_{j,x} \times DOC_j \times e^{-k_j \cdot (y-x)} \times (1 - e^{-k_j})\right)$$

$$F_{CH4,BL,R,y} = 0.2 \times F_{CH4,PJ,capt,y} = 0.2 \times F_{CH4,PJ,y}$$

Table 4-2 Necessary values to calculate BE_{CH4}

Parameter	Value	Data sources
OX_{top_layer}	0.1	Emissions from solid waste disposal sites (version 08.0)
η_{PJ}	70%	FSR
φ_y	0.75	Emissions from solid waste disposal sites (version 08.0)
f_y	0	FSR
GWP_{CH4}	21（before 2013）/25（after 2013）	IPCC
OX	0.1	IPCC 2006 Guidelines for National Greenhouse Gas Inventories
F	0.5	IPCC 2006 Guidelines for National Greenhouse Gas Inventories

$DOC_{f,y}$	0.5			IPCC 2006 Guidelines for National Greenhouse Gas Inventories
MCF_y	1.0			IPCC 2006 Guidelines for National Greenhouse Gas Inventories
$Q_{j,c,y}$	Paper	12.66%		FSR
	Textiles	5.89%		
	Kitchen	58.44%		
	Wood	1.42%		
	Garden and park	0%		
	Others	21.59%		
	Total	100%		
DOC_j	Paper		40%	IPCC 2006 Guidelines for National Greenhouse Gas Inventories (adapted from Volume 5, Tables 2.4 and 2.5)
	Textiles		24%	
	Kitchen		15%	
	Wood		43%	
	Garden and park waste		20%	
	Rubber and leather		-	
	Plastic		-	
	Metal		-	
	Glass and metal		-	
	Others		-	
k_j	Paper		0.06	IPCC 2006 Guidelines for National Greenhouse Gas Inventories (adapted from Volume 5, Table 3.3)
	Textiles		0.06	
	Kitchen		0.185	
	Wood		0.03	
	Garden and park waste		0.10	
	Rubber and leather		-	

	Plastic	-	
	Metal	-	
	Glass and metal	-	
	Others	-	
y	1-10		ACM0001 (version 19.0)

According to the prediction model in the FSR, the amount of methane excluded the amount that the existing LFG project used produced by the Maiyuan landfill exceeds the amount of methane destroyed by the corresponding 6.402 5MW installation of the project. However, based on the methodological tool "Emissions from solid waste disposal sites" (version 08.0), the methane amount in landfill gas in the first 5 years calculated by this project is higher than the methane amount destroyed by the 6.402MW installation, and the later 5 years is less than the methane destroyed by the capacity of 6.402 MW. To be conservative, in the PD, the equation (10) in section 4.1 of the PD is applied to estimate the methane amount. Considering the use of "solid waste treatment station emissions calculation tool" to calculate methane consumption and the actual amount of destruction may exist large deviation, the PD refers to the parameters in the FSR: the installed capacity of 6.402 MW, annual operating hours (7200 hours), the power generation efficiency (30%), methane calorific value (0.0504 TJ/tCH_4), to have a theoretical calculation in the first 5 years, such as the installed capacity of 6.402 MW and prior calculation of methane from destroyed for 10,975 tons/year. However, in the later 5 years, the theoretical installed capacity is less than 6.402MW, the details theoretical installed capacity and methane destroyed as follows, details please refer to ER calculation sheet.

Table 4-3 The estimation of annual methane destroyed

Year	Methane amount estimated according to equation (10) (m^3)	η_{PJ}	Theoretical installed capacity (MW)	Actual installed capacity (MW)	Annual electricity generation (MWh)	Annual electricity supplied to the grid	Annual methane destroyed based on annual electricity generation(tCH_4)
2019	33,492,467	70%	9.803	6.402	46,094	43,329	10,975
2020	31,637,941	70%	9.260	6.402	46,094	43,329	10,975
2021	28,369,317	70%	8.304	6.402	46,094	43,329	10,975
2022	25,604,679	70%	7.494	6.402	46,094	43,329	10,975
2023	23,261,666	70%	6.809	6.402	46,094	43,329	10,975
2024	21,271,669	70%	6.226	6.402	44,828	42,138	10,673

2025	18,717,856	70%	5.479	6.402	39,446	37,079	9,392
2026	16,537,141	70%	4.840	6.402	34,850	32,759	8,298
2027	14,669,831	70%	4.294	6.402	30,915	29,060	7,361
2028	13,066,128	70%	3.824	6.402	27,535	25,883	6,556

Therefore, in this PD, BE_{CH4} is ex ante estimated as the follows.

Table 4-4 The ex ante estimation of $BE_{CH4,y}$

Period	OX_{top_layer}	$F_{CH4,PJ,y}$ (tCH_4)	$F_{CH,BL,y}$ (tCH_4)	GWP_{CH4} ($t\ CO_2e/t\ CH_4$)	$BE_{CH4,y}$ ($t\ CO_2e$)
01-Jan-2019~31-Dec-2019	0.1	10,975	2,195	25	192,060
01-Jan-2020~31-Dec-2020	0.1	10,975	2,195	25	192,060
01-Jan-2021~31-Dec-2021	0.1	10,975	2,195	25	192,060
01-Jan-2022~31-Dec-2022	0.1	10,975	2,195	25	192,060
01-Jan-2023~31-Dec-2023	0.1	10,975	2,195	25	192,060
01-Jan-2024~31-Dec-2024	0.1	10,673	2,135	25	186,782
01-Jan-2025~31-Dec-2025	0.1	9,392	1,878	25	164,357
01-Jan-2026~31-Dec-2026	0.1	8,298	1,660	25	145,209
01-Jan-2027~31-Dec-2027	0.1	7,361	1,472	25	128,812
01-Jan-2028~31-Dec-2028	0.1	6,556	1,311	25	114,731
Total					1,700,191

1.2 Baseline emissions associated with electricity generation ($BE_{EC,y}$)

The $BE_{EC,y}$ is calculated according to the following equation:

$$BE_{EC,y} = \sum_{k} EC_{BL,k,y} \times EF_{EL,k,y} \times (1 + TDL_{k,y})$$

Table 4-5 The estimation of $BE_{EC,y}$

Period	$EC_{BL,k,y}$ (MWh)	$EF_{EL,k,y}$ (tCO_2/MWh)	$TDL_{k,y}$	$BE_{EC,y}$ ($t\ CO_2e$)
01-Jan-2019~31-Dec-2019	43,329	0.6063	3%	27,058
01-Jan-2020~31-Dec-2020	43,329	0.6063	3%	27,058
01-Jan-2021~31-Dec-2021	43,329	0.6063	3%	27,058

01-Jan-2022~31-Dec-2022	43,329	0.6063	3%	27,058
01-Jan-2023~31-Dec-2023	43,329	0.6063	3%	27,058
01-Jan-2024~31-Dec-2024	42,138	0.6063	3%	26,314
01-Jan-2025~31-Dec-2025	37,079	0.6063	3%	23,155
01-Jan-2026~31-Dec-2026	32,759	0.6063	3%	20,457
01-Jan-2027~31-Dec-2027	29,060	0.6063	3%	18,147
01-Jan-2028~31-Dec-2028	25,883	0.6063	3%	16,163
Total				239,526

Thus, the baseline emissions are determined as below.

Table 4-6 The estimation of BE_y

Period	$BE_{CH4,y}$ (t CO_2e)	$BE_{EC,y}$ (t CO_2e)	BE_y (t CO_2e)
01-Jan-2019~31-Dec-2019	192,060	27,058	219,118
01-Jan-2020~31-Dec-2020	192,060	27,058	219,118
01-Jan-2021~31-Dec-2021	192,060	27,058	219,118
01-Jan-2022~31-Dec-2022	192,060	27,058	219,118
01-Jan-2023~31-Dec-2023	192,060	27,058	219,118
01-Jan-2024~31-Dec-2024	186,782	26,314	213,096
01-Jan-2025~31-Dec-2025	164,357	23,155	187,512
01-Jan-2026~31-Dec-2026	145,209	20,457	165,666
01-Jan-2027~31-Dec-2027	128,812	18,147	146,959
01-Jan-2028~31-Dec-2028	114,731	16,163	130,894
Total	1,700,191	239,526	1,939,717

2. Calculation of the project emissions

As described in section 4.2, it is assumed that the amount of electricity consumed from the grid is zero ($EC_{PJ,j,y}$=0) in ex-ante phase, which will be monitored in the verification period. Thus,

PE_y= $PE_{EC,y} = \sum_j EC_{PJ,j,y} \times EF_{EL,j,y} \times (1+TDL_{j,y})$ =0 in ex-ante phase.

3. Calculation of the leakage

As described in section 4.3, the leakage is not considered.

4. Calculation of emission reductions

The emission reductions can be obtained as below:

Table 4-7 The estimation of ER_y

Period	BE_y (t CO_2e)	PE_y (t CO_2e)	LE_y (t CO_2e)	ER_y (t CO_2e)
01-Jan-2019~31-Dec-2019	219,118	0	0	219,118
01-Jan-2020~31-Dec-2020	219,118	0	0	219,118
01-Jan-2021~31-Dec-2021	219,118	0	0	219,118
01-Jan-2022~31-Dec-2022	219,118	0	0	219,118
01-Jan-2023~31-Dec-2023	219,118	0	0	219,118
01-Jan-2024~31-Dec-2024	213,096	0	0	213,096
01-Jan-2025~31-Dec-2025	187,512	0	0	187,512
01-Jan-2026~31-Dec-2026	165,666	0	0	165,666
01-Jan-2027~31-Dec-2027	146,959	0	0	146,959
01-Jan-2028~31-Dec-2028	130,894	0	0	130,894
Total	1,939,717	0	0	1,939,717

5 MONITORING

5.1 Data and Parameters Available at Validation

Data / Parameter	OX_{top_layer}
Data unit	Dimensionless
Description	Fraction of methane that would be oxidized in the top layer of the SWDS in the baseline
Source of data	Consistent with how oxidation is accounted for in the methodological tool “Emissions from solid waste disposal sites”
Value applied	0.1
Justification of choice of data or description of measurement methods and procedures applied	-

Purpose of Data	Calculation of baseline emissions
Comments	-

Data / Parameter	GWP_{CH4}
Data unit	t CO_2e/t CH_4
Description	Global warming potential of CH_4
Source of data	IPCC
Value applied	25
Justification of choice of data or description of measurement methods and procedures applied	Default value of 25 from IPCC Fourth Assessment Report (AR4). Shall be updated according to any future COP/MOP decisions.
Purpose of Data	Calculation of baseline emissions
Comments	-

Data / Parameter	NCV_{CH4}
Data unit	TJ/t CH_4
Description	Net calorific value of methane at reference conditions
Source of data	Technical literature
Value applied	0.0504
Justification of choice of data or description of measurement methods and procedures applied	-
Purpose of Data	Calculation of baseline emissions
Comments	-

Data / Parameter	η_{PJ}
Data unit	Dimensionless

Description	Efficiency of the LFG capture system that will be installed in the project activity
Source of data	FSR
Value applied	70%
Justification of choice of data or description of measurement methods and procedures applied	-
Purpose of Data	Calculation of baseline emissions
Comments	-

Data / Parameter	D_{CH4}
Data unit	t/m^3
Description	Methane Density
Source of data	-
Value applied	At standard temperature and pressure (0°C and 101.3 Kpa) the density of methane is 0.0007168 tCH_4/m^3CH_4
Justification of choice of data or description of measurement methods and procedures applied	-
Purpose of Data	Calculation of baseline emissions
Comments	-

Data / Parameter	φ_y
Data unit	-
Description	Default value for the model correction factor to account for model uncertainties
Source of data	“Emissions from solid waste disposal sites” (version 08.0)
Value applied	0.75

		Humid/wet conditions	Dry conditions
	Application A	0.75	0.75
	Application B	0.85	0.80

Justification of choice of data or description of measurement methods and procedures applied	Default value suggested in the tool. The project selects Option 1 :Use a default value to determine φ_y in the tool "Emissions from solid waste disposal sites" (version 08.0), and the project belongs to the situation of Application A: The VCS project activity mitigates methane emissions from a specific existing SWDS, thus 0.75 is chosen for φ_y .
Purpose of Data	Calculation of baseline emissions
Comments	-

Data / Parameter	OX
Data unit	-
Description	Oxidation factor (reflecting the amount of methane from SWDS that is oxidized in the soil or other material covering the waste)
Source of data	IPCC 2006 Guidelines for National Greenhouse Gas Inventories
Value applied	0.1
Justification of choice of data or description of measurement methods and procedures applied	The landfill is covered with plastic film or soil, for conservative 0.1 was chosen.
Purpose of Data	Calculation of baseline emissions
Comments	-

Data / Parameter	F
Data unit	-
Description	Fraction of methane in the SWDS gas (volume fraction)

Source of data	IPCC 2006 Guidelines for National Greenhouse Gas Inventories
Value applied	0.5
Justification of choice of data or description of measurement methods and procedures applied	Using IPCC 2006 Guidelines default value
Purpose of Data	Calculation of baseline emissions
Comments	-

Data / Parameter	$DOC_{f,y}$
Data unit	Weight fraction
Description	Default value for the fraction of degradable organic carbon (DOC) in MSW that decomposes in the SWDS
Source of data	IPCC 2006 Guidelines for National Greenhouse Gas Inventories
Value applied	0.5
Justification of choice of data or description of measurement methods and procedures applied	Using IPCC 2006 Guidelines default value
Purpose of Data	Calculation of baseline emissions
Comments	-

Data / Parameter	$MCF_{,y}$
Data unit	-
Description	Methane correction factor
Source of data	IPCC 2006 Guidelines for National Greenhouse Gas Inventories
Value applied	1.0
Justification of choice of data or description of measurement methods and procedures applied	The Maiyuan landfill is controlled, including the following activities: (i) cover material; (ii) mechanical compacting; (iii) levelling of the waste. Therefore, 1.0 for anaerobic managed

	solid waste disposal sites is recommended by "Emissions from solid waste disposal sites (Version 08.0)."
Purpose of Data	Calculation of baseline emissions
Comments	-

Data / Parameter	$DOC_{,j}$
Data unit	-
Description	Fraction of degradable organic carbon in the waste type j (weight fraction)
Source of data	IPCC 2006 Guidelines for National Greenhouse Gas Inventories (adapted from Volume 5, Tables 2.4 and 2.5)
Value applied	Apply the following values for the different waste types *j* for MSW:

Waste classification	*DOC_j（% wet waste）*
Wood and wood product	43
Pulp, paper and cardboard (other than sludge)	40
Food, food waste, beverage and tobacco (other than sludge)	15
Textiles	24
Gardens, yard and park was	20
Glass, metal and ot er inert waste	0

Justification of choice of data or description of measurement methods and procedures applied	Using IPCC 2006 Guidelines default value
Purpose of Data	Calculation of baseline emissions
Comments	-

Data / Parameter	$k_{,j}$

Data unit	1/yr
Description	Decay rate for the waste type j
Source of data	IPCC 2006 Guidelines for National Greenhouse Gas Inventories (adapted from Volume 5, Table 3.3)
Value applied	Apply the following default values for the different waste types j:

Waste type *j*		Boreal and Temperate（MAT≤20℃）		Tropical (MAT>20℃)	
		Dry (MAP/PET<1)	Wet (MAP/PET>1)	Dry (MAP <1000mm)	Wet (MAP >1000mm)
Slowly degrading	Pulp, paper, cardboard (other than sludge), textiles	0.04	0.06	0.045	0.07
	Wood, wood products and straw	0.02	0.03	0.025	0.035
Moderately degrading	Other (non-food) organic putrescible garden and park waste	0.05	0.10	0.065	0.17
Rapidly degrading	Food, food waste, sewage sludge, beverages and tobacco	0.06	0.185	0.085	0.40

Note: MAT – mean annual temperature, MAP – Mean annual precipitation, PET – potential evapotranspiration. MAP/PET is the ratio between the mean annual precipitation and the potential evapotranspiration.

Justification of choice of data or description of measurement methods and procedures applied	The average temperature of Nanchang city is 17℃~18℃. The annual mean precipitation is 1,592mm, the potential evapotranspiration is 1307mm[5], thus, MAP/PET>1. Based on this data, the climate is classed as: Boreal and Temperate (MAT≤20℃), Wet (MAP/PET>1), and the value of k_j for this climate is applied for the project.
Purpose of Data	Calculation of baseline emissions
Comments	-

Data / Parameter	$TDL_{j,y}$ and $TDL_{k,y}$
Data unit	-
Description	Average technical transmission and distribution losses for providing electricity to source j or k in year y

[5] https://www.docin.com/p-1017763827.html

Source of data	Methodological tool "Baseline, project and/or leakage emissions from electricity consumption and monitoring of electricity generation" (version 03.0)
Value applied	$TDL_{j,y}$: 20% $TDL_{k,y}$: 3%
Justification of choice of data or description of measurement methods and procedures applied	*According to the tool "Baseline, project and/or leakage emissions from electricity consumption and monitoring of electricity generation" (version 03.0), the project belongs to the case of Scenario A, use as default values of 20% for baseline emission, and 3% for baseline emissions.*
Purpose of Data	Calculation of baseline emissions
Comments	-

Data / Parameter	$EF_{grid,CM,y}$
Data unit	t CO_2/MWh
Description	Combined margin emission factor for the grid in year y
Source of data	"2017 Baseline Emission Factors for Regional Power Grids in China" published by DNA of China
Value applied	0.6063
Justification of choice of data or description of measurement methods and procedures applied	Calculated as per the latest version of "Tool to calculate the emission factor for an electricity system" (version 07.0) by DNA of China.
Purpose of Data	Calculation of baseline emissions and project emissions
Comments	According to section 4.1, the ex ante option is selected to calculate $EF_{grid, OM,y}$ and $EF_{grid,BM,y}$ and fixed in the crediting period, thus the $EF_{grid,CM,y}$ is fixed during the crediting period

5.2 Data and Parameters Monitored

Data / Parameter	Management of SWDS
Data unit	-
Description	Management of SWDS
Source of data	Original design of the landfill

Description of measurement methods and procedures to be applied	Project participants should refer to the original design of the landfill to ensure that any practice to increase methane generation have been occurring prior to the implementation of the project activity. Any change in the management of the SWDS after the implementation of the project activity should be justified by referring to technical or regulatory specifications
Frequency of monitoring/recording	Annually
Value applied	-
Monitoring equipment	-
QA/QC procedures to be applied	-
Purpose of data	Calculation of baseline emissions
Calculation method	-
Comments	-

Data / Parameter	$F_{CH4,BL,R,y}$
Data unit	t CH_4/yr
Description	Amount of methane in the LFG which is flared due to a requirement in year *y*
Source of data	Information of the host country's regulatory requirements relating to LFG, contractual requirements, or requirements to address safety and odour concerns
Description of measurement methods and procedures to be applied	
Frequency of monitoring/recording	Annually
Value applied	-
Monitoring equipment	-

QA/QC procedures to be applied	
Purpose of data	-
Calculation method	Calculation of baseline emissions
Comments	Applicable to Case 2 of section 5.4.1.3

Data / Parameter	$\rho_{reg,y}$
Data unit	Dimensionless
Description	Fraction of LFG that is required to be flared due to a requirement in year *y*
Source of data	Information of the host country's regulatory requirements relating to LFG, contractual requirements, or requirements to address safety and odour concerns
Description of measurement methods and procedures to be applied	According to the methodology ACM0001 (version 19.0), If the requirement does not specify any amount or percentage of LFG that should be destroyed, but requires the installation of a system to capture and flare the LFG, then a typical destruction rate of 20 per cent is assumed
Frequency of monitoring/recording	Annually
Value applied	20%
Monitoring equipment	-
QA/QC procedures to be applied	-
Purpose of data	Calculation of baseline emissions
Calculation method	-
Comments	Applicable to Case 2 of section 5.4.1.3

Data / Parameter	$V_{t,db}$
Data unit	m³ dry gas/h
Description	Volumetric flow of the gaseous stream in time interval t on a dry basis
Source of data	Measured by a flow meter continuously
Description of measurement methods and procedures to be applied	The parameters of $V_{t,db}$ will be converted automatically into standard value (at the normal condition of 0˚C and 101,325 Pa) by the recovery monitoring system
Frequency of monitoring/recording	Continuous
Value applied	-
Monitoring equipment	Flow meter
QA/QC procedures to be applied	Periodic calibration against a primary device provided by an independent accredited laboratory is mandatory for all projects applying large scale methodology(ies). Calibration and frequency of calibration is according to manufacturer's specifications
Purpose of data	Calculation of baseline emissions
Calculation method	-
Comments	This parameter will be monitored in Options A

Data / Parameter	$v_{CH4,t,db}$
Data unit	m³ gas CH_4/m³ dry gas
Description	Volumetric fraction of greenhouse gas CH_4 in a time interval t on a dry basis
Source of data	Measured by continuous gas analyzer
Description of measurement methods and procedures to be applied	Continuous gas analyser operating in dry-basis. Volumetric flow measurement should always refer to the actual pressure and temperature

Frequency of monitoring/recording	Continuous
Value applied	
Monitoring equipment	-
QA/QC procedures to be applied	
Purpose of data	Calculation of baseline emissions
Calculation method	
Comments	

Data / Parameter	$Op_{j,h}$
Data unit	-
Description	Operation of the equipment that consumes the LFG
Source of data	Project participants
Description of measurement methods and procedures to be applied	For each equipment unit j using the LFG monitor that the plant is operating in hour h by the monitoring any one or more of the following three parameters: (a) Temperature. Determine the location for temperature measurements and minimum operational temperature based on manufacturer's specifications of the burning equipment. Document and justify the location and minimum threshold in the PD; (b) Flame. Flame detection system is used to ensure that the equipment is in operation; (c) Products generated. Monitor the generation of steam for the case of boilers and air-heaters and glass for the case of glass melting furnaces. This option is not applicable to brick kilns. $Op_{j,h}$=0 when: (a) One of more temperature measurements are missing or below the minimum threshold in hour h (instantaneous measurements are made at least every minute);

	(b) Flame is not detected continuously in hour h (instantaneous measurements are made at least every minute); (c) No products are generated in the hour h. Otherwise, $Op_{j,h}$=1
Frequency of monitoring/recording	Hourly
Value applied	7,200
Monitoring equipment	-
QA/QC procedures to be applied	-
Purpose of data	Calculation of baseline emissions.
Calculation method	-
Comments	-

Data / Parameter	$EC_{PJ,y}$
Data unit	MWh
Description	Amount of electricity generated using LFG by the project activity in year y
Source of data	Electricity meter
Description of measurement methods and procedures to be applied	electricity meter(s) and monthly recorded. All electronic data and paper documents will be archived for two years following the end of the crediting period.
Frequency of monitoring/recording	Continuously
Value applied	Please refer to section 4.4 for details.
Monitoring equipment	Electricity meter
QA/QC procedures to be applied	The data will be cross checked with Electricity Transaction Note. The electricity meter(s) will be periodically checked and maintained.

	Calibration will be carried out once a year to ensure normal operation.
Purpose of data	Calculation of baseline emissions.
Calculation method	-
Comments	This parameter is required for calculating baseline emissions associated with electricity generation ($BE_{EC,y}$) using the methodological tool "Baseline, project and/or leakage emissions from electricity consumption and monitoring of electricity generation".

Data / Parameter	$EC_{EC,y}$
Data unit	MWh
Description	Amount of electricity consumed by the project activity in year y
Source of data	Electricity meter
Description of measurement methods and procedures to be applied	Sources of consumption shall include, where applicable, electricity consumed for the operation of the LFG capture system, for any processing and upgrading of the LFG, for transportation of the LFG to the flare or other applications (boilers, power generators), for the compression of the LFG into the natural gas network, etc.
Frequency of monitoring/recording	Continuously
Value applied	0 estimated at ex ante, and will be monitored ex post.
Monitoring equipment	Electricity meter
QA/QC procedures to be applied	The data will be cross checked with Electricity Transaction Note. The electricity meter(s) will be periodically checked and maintained. Calibration will be carried out once a year to ensure normal operation.
Purpose of data	Calculation of project emissions.
Calculation method	-

Comments	This parameter is required for calculating project emissions from electricity consumption due to an alternative waste treatment process t ($PE_{EC,y}$) using the methodological tool "Baseline, project and/or leakage emissions from electricity consumption and monitoring of electricity generation".

Data / Parameter	CAPEX and OPEX
Data unit	Currency (USD, EUR, etc.)
Description	Total investment to implement the project and total cost to operate the project
Source of data	Engineering, procurement and construction contracts; and maintenance contracts
Description of measurement methods and procedures to be applied	-
Frequency of monitoring/recording	At the first issuance request after each phase of the project is fully implemented
Value applied	-
Monitoring equipment	-
QA/QC procedures to be applied	Audited by professional, independent financial auditors. The DOE should only verify that the data provided corresponds to the data from independent financial auditors
Purpose of data	-
Calculation method	-
Comments	The information provided for CAPEX shall indicate the investment made: (i) in the collection and flaring system; (ii) in the power plant and connection to the grid (if applicable); and (iii) in the purchase of the new boiler or refurbishment of the existing one and in the steam/hot air pipeline if steam/hot air is exported out of the project boundary (if applicable). The information supplied for OPEX shall indicate the costs for: (i) staff and maintenance involved in the operation of the collection

	and flaring system; and (ii) staff and maintenance involved in the operation of the collection and power generation system. The monitoring of this parameter is only required for projects applying the simplified procedures to identify the baseline scenario and demonstrate additionality

Data / Parameter	Tariff of electricity exported
Data unit	Currency (USD, EUR, etc.)
Description	Tariff of the electricity exported
Source of data	Power purchase agreement
Description of measurement methods and procedures to be applied	-
Frequency of monitoring/recording	At the first issuance request after each phase of the project is fully implemented
Value applied	0 estimated at ex ante, and will be monitored ex post.
Monitoring equipment	-
QA/QC procedures to be applied	Audited by professional, independent financial auditors. The DOE should only verify that the data provided corresponds to the data from independent financial auditors
Purpose of data	-
Calculation method	-
Comments	The monitoring of this parameter is only required for projects applying the simplified procedures to identify the baseline scenario and demonstrate additionality

5.3 Monitoring Plan

The monitoring plan presented in this PD assures that real, measurable, long-term GHG emission reductions can be monitored, recorded and reported. It is a crucial procedure to identify the final VCUs of the project. This monitoring plan will be implemented by the project owner during the project operation. The details of the monitoring plan are specified as follows:

（A） Data and parameters to be monitored

Data and parameters to be monitored are listed below shows the positions of the monitoring instruments and Table 5-1 lists the corresponding parameters monitored:

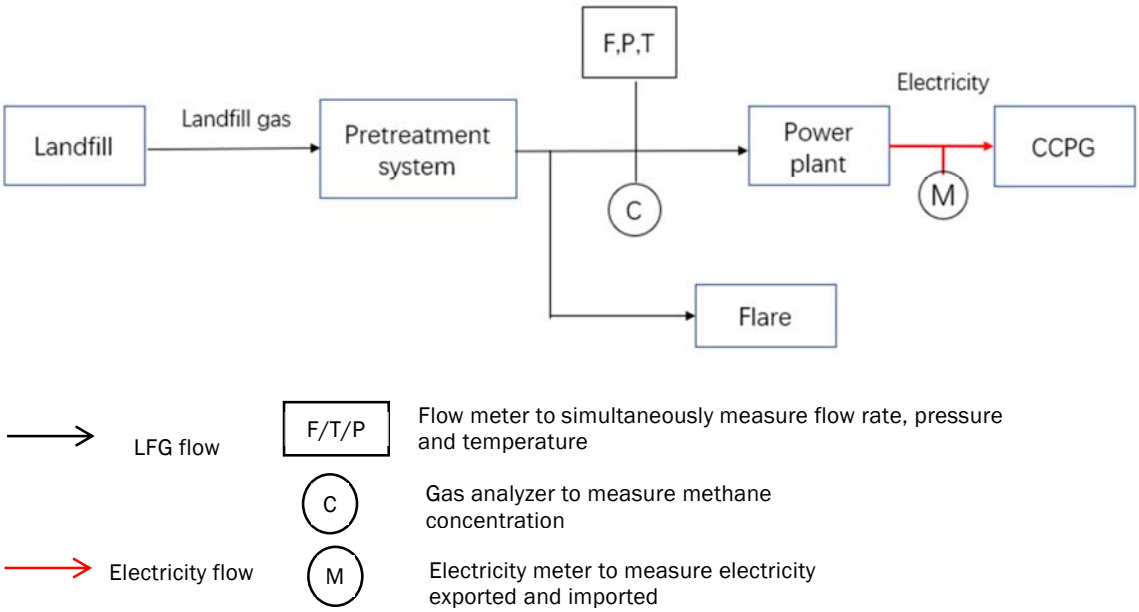

Figure 5-1 Project monitoring diagram

Table 5-1 Corresponding parameters monitored

Position	Parameter Monitored	Description
LFG Inflow Monitoring	$V_{t,db}$ and $v_{i,t,db}$	Volumetric flow of the gaseous stream, Volumetric fraction of greenhouse gas CH_4, gas flow rate, pressure and temperature are monitored on-site and used to calculate methane captured and destroyed by use of power generation.
Electricity Monitoring	$EC_{PJ,y}$ 、 $EC_{EC,y}$	Amount of electricity generated using LFG by the project activity and electricity consumed by the project activity are continuously monitored.

(B) Management Structure

The Project owner organizes a specific VCS team in project development department to be responsible for data collection, supervision and witness the whole process of data measuring and recording. A VCS manager is appointed to take full responsibility for the overall monitoring of the project. The monitoring and measurement of extracted gas, electricity generation and

consumption etc. are carried out by a few designated monitoring officers. In addition, the Project developer appoints internal verifiers who is responsible for internal check of the measurement, collection of relevant receipts and invoices, and the calculation of the emission reductions. A monitoring and management manual of the project that identifies detailed duties and responsibilities of the relevant parties is developed and served as the basis of the project monitoring. Figure 5-2 shows the operation and management structure of the Project.

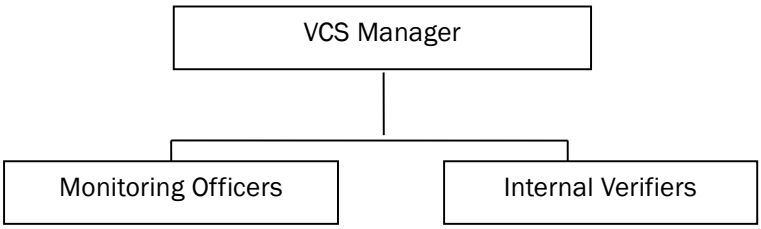

Figure 5-2 Operation and management structure of the project

(C) Data collection

Monitoring officers are responsible for data collection. Designated teams will read and collect the monitored data regularly. The computer system will automatically monitor and record relevant meter data. Automatic records will serve as the main data source for emission reductions calculation. All data files, relevant purchase invoices and sales receipts will be collected by a designated monitoring officer, who will prepare backup in time and archive all documents properly.

(D) Quality assurance

All metering equipment for monitoring will be chosen in accordance with VCS requirements, and will be calibrated regularly for accuracy by qualified party according to the national regulations. To assist in future verifications, the Project owner will preserve the calibration records, along with the data files of project monitoring.

Error check routines will be established on site and at the point of data storage to detect data measuring/transmission failures as well as malfunctions. In the case of malfunction of the meters, the meter supplier will provide technical support to engage the problem promptly and emission reductions during the corresponding period will be calculated conservatively.

The installation of the electricity metering equipment will fulfill the requirements of "*DL/T448–2016 Technical Administrative Code of Electric Energy Metering*"[6]. The accuracy should not be less than 0.5S. The installation of flow meters and gas analyzers will fulfill the national standard (MT448-2008 and JJG 1138-2017). All the meters will be checked and maintained periodically.

[6] https://wenku.baidu.com/view/c8ad0b432379168884868762caaedd3383c4b59e.html

(E) Data file management

All monitoring data will be electronically filed by the end of each month and the electronic data files will be archived in both disk copy and printed hard copy. Other documents in paper e.g. maps, forms and environment assessment reports will be preserved as well. All data collected as part of monitoring will be archived electronically and be kept at least for 2 years after the end of the crediting period. The Project owner will provide original records and documents if necessary.