DESIGN AND CONSTRUCTION STANDARDS FOR WATER AND WASTEWATER FACILITIES

SOUTH ADAMS COUNTY WATER AND SANITATION DISTRICT

May 11, 2022

CONTENTS

SECTION 1 - GENERAL REQUIREMENTS 1

1.1 PURPOSE 1

1.2 ABBREVIATIONS 1

1.3 DEFINITIONS 3

1.4 SUBMITTAL PROCEDURES 6

1.4.1 PRELIMINARY DESIGN SUBMITTAL: MAIN EXTENSIONS, DISTRIBUTION SYSTEMS, COLLECTION SYSTEMS, IRRIGATION SYSTEMS 7

1.4.2 FINAL DESIGN SUBMITTAL: MAIN EXTENSIONS, DISTRIBUTION SYSTEMS, COLLECTION SYSTEMS, IRRIGATION SYSTEMS 9

1.4.3 SERVICE TAP SUBMITTALS 10

1.4.4 CHANGES TO APPROVED PLANS 12

1.4.5 RECORD DOCUMENTS 12

1.5 STEP-BY-STEP PROCEDURAL SUMMARY FOR DEVELOPING WATER AND WASTEWATER FACILITIES WITHIN THE DISTRICT 13

1.6 DISTRICT MASTER PLAN COMPLIANCE 16

1.7 EXTENSION OF POTABLE WATER AND WASTEWATER SERVICE 17

1.8 USE OF EASEMENTS 17

1.9 START OF CONSTRUCTION 18

1.10 CONTRACTOR'S RESPONSIBILITIES 18

1.10.1 SUPERVISION AND SUPERINTENDENCE 18

1.10.2 LABOR, MATERIALS, AND EQUIPMENT 19

1.10.3 SUBSTITUTES AND "OR-EQUAL" ITEMS 19

1.10.4 PERMITS AND LICENSES 20

1.10.5 LAWS AND REGULATIONS 20

1.10.6 TAXES.....20

1.10.7 SAFETY AND PROTECTION 20

1.10.8 SANITARY FACILITIES 21

1.10.9 MAINTENANCE OF TRAFFIC 22

1.10.10 UNFAVORABLE CONSTRUCTION CONDITIONS 22

1.10.11 TEMPORARY DRAINAGE PROVISIONS 22

1.10.12 EROSION AND DUST CONTROL.....23

1.10.13 POLLUTION CONTROL 23

1.10.14 NOTICES TO OWNERS AND AUTHORITIES.....23

1.10.15 USE OF PREMISES 24

1.10.16 LIMITED CONSTRUCTION SPACE.....24

1.10.17 POWER POLE BRACING.....24

1.10.18 SOD REPLACEMENT.....25

1.10.19 RESPONSIBILITY FOR EXISTING UTILITIES, STRUCTURES.....25

1.10.20 CONNECTIONS TO EXISTING FACILITIES 25

1.10.21 OPERATION OF DISTRICT FACILITIES.....26

1.10.22 LINES AND GRADES.....26

1.10.23 RESTORATION AND CLEAN-UP 26

1.10.24 CONFIDENTIALITY.....27

1.11 INSPECTION 27

1.11.1 ACCESS TO WORK.....27

1.11.2 TESTS AND INSPECTIONS 27

1.11.3 UNCOVERING WORK.....28

1.11.4 DISTRICT STOPPAGE OF WORK 28

1.11.5 CORRECTION OR REMOVAL OF DEFECTIVE WORK 28

1.11.6 CORRECTION PERIOD.....28

1.12 GUARANTEE OF WORK 29

1.13 OWNERSHIP TRANSFER 29

1.14 CONSTRUCTION WATER 29

1.15 CROSS-CONNECTION CONTROL REQUIREMENTS 29

1.16 UNDERDRAIN SYSTEMS.....30

1.17 WASTEWATER FACILITIES SITE LOCATION LIMITATIONS.....30

1.18 WASTEWATER FACILITIES SITE APPLICATION REQUIREMENTS 30

SECTION 2 – DESIGN REQUIREMENTS FOR POTABLE WATER DISTRIBUTION FACILITIES 1

2.1 GENERAL.....1

2.2 SYSTEM DESIGN 1

2.2.1 DISTRIBUTION SYSTEM DESIGN CRITERIA.....1

2.2.2 DISTRIBUTION SYSTEM PRESSURE CONSIDERATIONS.4

2.2.3 FIRE FLOWS 4

2.2.4 SERVICE LINE AND METER SIZING.....5

2.3 DISTRIBUTION SYSTEM LAYOUT 5

2.3.1 GENERAL 5

2.3.2 SYSTEM LOOPING AND DEAD-END WATER MAINS.....6

2.3.3 MINIMUM COVER AND MAXIMUM BURY DEPTH.....6

2.3.4 VERTICAL CLEARANCE.....6

2.3.5 MINIMUM WATER MAIN SIZE 7

2.3.6 VALVES 7

2.3.7 FIRE HYDRANTS 7

2.3.8 WATER QUALITY SAMPLING STATIONS.....8

2.4 SINGLE-FAMILY RESIDENTIAL SERVICE LINE LAYOUT.....8

2.4.1 HORIZONTAL LAYOUT.....8

2.4.2 VERTICAL LAYOUT.....9

2.5 SERVICE LINE LAYOUTS FOR NON SINGLE-FAMILY RESIDENTIAL LOTS.....9

SECTION 3 – DESIGN REQUIREMENTS FOR WASTEWATER COLLECTION FACILITIES 1

3.1 GENERAL.....1

3.2 DESIGN FLOW.....1

3.3 DESIGN VELOCITY.....2

3.4 PIPE SIZES.....2

3.5 SLOPE.....2

3.6 SERVICE LINES.....3

3.7 DEPTH.....4

3.8 LOCATION OF SANITARY SEWERS AND APPURTENANCES.....4

3.9 ALIGNMENT.....5

3.10 TERMINATION.....5

3.11 MANHOLES.....5

3.12 SAMPLING MANHOLES.....6

3.13 WASTEWATER LIFT STATIONS.....6

3.14 GREASE AND SAND/OIL INTERCEPTORS.....7

SECTION 4 – DESIGN REQUIREMENTS FOR IRRIGATION WATER FACILITIES...1

4.1 GENERAL.....1

4.2 DESCRIPTION OF THE IRRIGATION DISTRIBUTION SYSTEM.....1

4.2.1 DISTRIBUTION SYSTEMS WITHIN DEVELOPMENTS.....1

4.2.2 ARTERIAL DISTRIBUTION SYSTEM.....2

4.2.3 IDENTIFICATION OF FACILITIES.....2

4.2.4 SERVICE 2

4.2.5 SOURCE OF SUPPLY.....3

4.3 SYSTEM DESIGN 3

4.3.1 CONNECTION TO THE ARTERIAL SYSTEM.....3

4.3.2 IRRIGATION DISTRIBUTION SYSTEM DESIGN CRITERIA....4

4.3.3 IRRIGATION DISTRIBUTION SYSTEM PRESSURE CONSIDERATIONS 6

4.3.4 IRRIGATION SERVICE LINE AND METER SIZING.....6

4.4 DISTRIBUTION SYSTEM LAYOUT 6

4.4.1 GENERAL 7

4.4.2 SYSTEM LOOPING AND DEAD-END IRRIGATION MAINS.....7

4.4.3 MINIMUM COVER AND MAXIMUM BURY DEPTH.....7

4.4.4 VERTICAL CLEARANCE.....7

4.4.5 MINIMUM MAIN SIZE 8

4.4.6 VALVES 8

4.4.7 FIRE HYDRANTS 8

4.4.8 FLUSHING HYDRANTS.....8

4.5 SINGLE-FAMILY RESIDENTIAL IRRIGATION SERVICE LINE LAYOUT....9

4.5.1 HORIZONTAL LAYOUT 9

4.5.2 VERTICAL LAYOUT.....10

4.6 IRRIGATION SERVICE LINE LAYOUTS FOR NON SINGLE-FAMILY RESIDENTIAL LOTS 10

SECTION 5 – GENERAL SPECIFICATIONS AND TECHNICALPROVISIONS FOR CONSTRUCTION OF UNDERGROUND WATER, IRRIGATION, AND WASTEWATER FACILITIES 1

5.1 SCOPE 1

5.2 STANDARD SPECIFICATIONS 1

5.3 MATERIALS 1

5.3.1 GENERAL 1

5.3.2 POTABLE WATER SYSTEM AND IRRIGATION SYSTEM MATERIALS 2

5.3.2.1 PIPE 2

5.3.2.1.a Ductile Iron Pipe Nominal Sizes 4-inch Through 24-inch 3

5.3.2.1.b Polyvinyl Chloride (PVC) Pipe Nominal Sizes 4-inch Through 24-inch 3

5.3.2.2 PIPE JOINTS (STRAIGHT RUN PIPE) 4

5.3.2.2.a Ductile Iron Pipe 4

5.3.2.2.a(1) Flanged 4

5.3.2.2.a(2) Mechanical and Push-on Joints 4

5.3.2.2.b PVC Pipe 4

5.3.2.3 FITTINGS 4

5.3.2.4 BOLTS, NUTS AND GASKETS 5

5.3.2.5 VALVES AND VALVE BOXES 5

5.3.2.5.a General 5

5.3.2.5.b Butterfly Valves 5

5.3.2.5.c Gate Valves 5

5.3.2.5.d Combination Air Valves 6

5.3.2.5.e Potable Valve Boxes 6

5.3.2.5.f Irrigation Valve Boxes 6

5.3.2.6.a DISTRICT FIRE HYDRANTS 7

5.3.2.6.b PRIVATE FIRE HYDRANTS 7

5.3.2.7 IRRIGATION FLUSHING HYDRANTS 7

5.3.2.8 MANHOLE AND VAULT MATERIALS 8

5.3.2.9 JOINT RESTRAINT.....8

5.3.2.9.a General 8

5.3.2.9.b Concrete Thrust Blocks 9

5.3.2.9.c Tied Pipe Lengths.....9

5.3.2.9.c(1) Wedge Style Joint Restraint for Mechanical Joint Ductile Iron Pipe and Mechanical Joint Fittings on Ductile Iron Pipe..9

5.3.2.9.c(2) Joint Restraint for Push-on Joint PVC Pipe and Mechanical Joint Fittings on PVC Pipe.....10

5.3.2.9.c(3) Wedge Style Joint Restraint for Push-on Joint Ductile Iron Pipe 10

5.3.2.9.c(4) Boltless Restraint for Push-on Joint Ductile Iron Pipe....10

5.3.2.10 PIPE SERVICE SADDLES.....10

5.3.2.11 SERVICE LINES 10

5.3.2.11.b General – Irrigation.....11

5.3.2.11.c Pipe - Potable 11

5.3.2.11.d Pipe - Irrigation 12

5.3.2.11.e Connection to Water Mains 12

5.3.2.11.e(1) Service Line Connections to Ductile Iron Pipe 12

5.3.2.12 SERVICE LINE WATER METERS.....12

5.3.2.12.a Meter Sizes 5/8-inch to 2-inch 12

5.3.2.12.b Meter Sizes 3-inch and Larger 12

5.3.2.13 COPPER METER SETTERS 13

5.3.2.13.a Potable Copper Meter Setters.....13

5.3.2.13.b Irrigation Copper Meter Setters 13

5.3.2.14 WATER METER PITS, MANHOLES AND VAULTS 13

5.3.2.14(a) Potable Water Meter Pits, Manholes and Vaults.....13

5.3.2.14(b) Irrigation Water Meter Pits, Manholes and Vaults.....14

5.3.2.15 FIRE HYDRANT LATERAL LINES.....14

5.3.2.16 FIRE SERVICE LINES.....15

5.3.2.17 POLYETHYLENE WRAPPING.....15

5.3.2.18 TRACER WIRE.....15

5.3.2.19 TRACER WIRE TEST STATIONS.....15

5.3.2.20 AIR VALVE MANHOLES.....15

5.3.2.21 WET TAPS ON EXISTING WATER MAINS.....16

5.3.2.22 WATER QUALITY SAMPLING STATIONS.....16

5.3.3 SANITARY SEWER SYSTEM MATERIALS.....16

5.3.4 MISCELLANEOUS MATERIALS.....24

5.3.5 PAVEMENT REPLACEMENT MATERIALS.....25

5.4 CONSTRUCTION OF WATER, IRRIGATION, AND SANITARY SEWER FACILITIES.....25

5.4.1 EXCAVATION.....25

5.4.2 BEDDING.....29

5.4.3 PIPE LAYING.....30

5.4.4 BACKFILL.....45

5.4.5 COMPACTION.....46

5.5 INSPECTION AND TESTING OF MAINS.....47

5.5.1 WATER MAINS.....47

5.5.2 SANITARY SEWER FACILITIES.....51

SECTION 6 – STANDARD DETAILS 1

APPENDIX A – CAD/GIS STANDARDS FOR SUBMITTING ELECTRONIC DRAWING FILES (which includes PDF, DWG, and GIS files) FOR

APPROVED AS-BUILTS/RECORD DRAWING FOR POTABLE, NON-POTABLE AND SANITARY SEWER. 1

APPENDIX B – STANDARD CONSTRUCTION DRAWING NOTES 1

APPENDIX C – EXAMPLE OF DISTRICT "EASEMENT AND RIGHT-OF-WAY AGREEMENT" 1

APPENDIX D – EXAMPLE OF DISTRICT "GRANT AND ACCEPTANCE OF UTILITIES AGREEMENT" 1

APPENDIX E – APPROVED CONSTRUCTION MATERIALS LIST 1

SECTION 1 - GENERAL REQUIREMENTS

1.1 PURPOSE

This manual establishes the minimum standards for the design and construction of water distribution and wastewater collection facilities within the South Adams County Water and Sanitation District (District) service area. These standards, referred to herein as the District's "Design and Construction Standards," include general requirements, design criteria, standard construction specifications, standard construction details, general construction drawing notes, and electronic drawing file standards.

It should be noted that this document, along with all other documents and agreements promulgated by the District, are periodically updated. It is the responsibility of those requesting, or in possession of, any information issued by the District to verify that they are utilizing the current versions of such information. The current Design and Construction Standards can be obtained from the District's website, http://www.sacwsd.org.

This manual shall be used in conjunction with the latest edition of the South Adams County Water and Sanitation District Rules and Regulations (Rules and Regulations). It is the responsibility of the Developer and Contractor to obtain a copy of the Rules and Regulations and to comply with all requirements contained therein. In the event of a conflict between the terms of this document and the Rules and Regulations, the term which is more protective of the District's water and sewer systems and the District's customers shall prevail.

This document is also available via the District's website. The District reserves the right to impose additional and/or more stringent requirements on all or part of any project as necessary to address the specific circumstances of a project and to ensure the reliability and quality of the District's systems.

1.2 ABBREVIATIONS

AASHTO	American Association of State Highway and Transportation Officials
ADF	Average Daily Flow
AF	Acre-feet
ASTM	American Society of Testing and Materials
AWWA	American Water Works Association
BMP	Best Management Practice
BFPDAVB	Backflow Prevention Device Atmospheric Vacuum Breaker
BFPRZA	Backflow Prevention Reduced Pressure Assembly
CAD	Computer Aided Design
CDPHE	Colorado Department of Public Health and Environment
CDOT	Colorado Department of Transportation
CLR	Clear

CP	Commercial Programs
COM	Commercial
CONC	Concrete
CORP	Corporation Stop
CTS	Copper Tube Size
CY	Cubic Yard
DIA	Diameter
DIP	Ductile Iron Pipe
DRCOG	Denver Regional Council of Governments
DWG	AutoCAD Drawing Database (File Extension)
ERU	Equivalent Residential Unit
FLG	Flanged
FT	Feet
GALV	Galvanized
GID	General Improvement District
GIS	Geographic Information System
GPD	Gallons Per Day
GPM	Gallons Per Minute
GSA	General Service Area
HGL	Hydraulic Grade Line
HORIZ	Horizontal
ID	Inside Diameter
IND	Industrial
IPP	Industrial Pretreatment Program
LBS	Pounds
MAX	Maximum
MFR	Multi-Family Residential
MGD	Million Gallons Per Day
MH	Manhole
MIN	Minimum
MIP	Male Iron Pipe
MJ	Mechanical Joint
NFPA	National Fire Protection Association
NTS	Not to Scale
OD	Outside Diameter
PDF	Portable Document Format
PE	Polyethylene
P/O	Parks/Open Space
POTW	Publicly Owned Treatment Works
PRV	Pressure Reducing Valve
PSF	Pounds Per Square Foot
PSI	Pounds Per Square Inch
PVC	Polyvinyl Chloride
RAD	Radius
ROW	Right-of-Way
SACWSD	South Adams County Water and Sanitation District

SFR	Single-Family Residential
SPD	Standard Proctor Density
STD	Standard
TYP	Typical
XREF	External Reference Files
WQCD	Water Quality Control Division
.ZIP	Archive file format compressed for storage or transmission

1.3 DEFINITIONS

"Approved Documents" shall mean construction plans, specifications, design reports, and electronic drawing files that have been reviewed and approved by the District.

“Approved Construction Materials List” shall mean the portion of this document located in Appendix E that summarizes the products and materials that have been accepted by the District to be used in the District’s potable, irrigation and sewer systems.

“Combined Water Delivery System” shall refer to those areas in the District that have only potable mains to supply both potable and irrigation water.

"Contractor" shall mean any individual or entity acting as an independent contractor that is hired by either the District or other individuals or entities; is authorized by the District to perform work on District facilities, on facilities to be connected to the District's facilities, or on facilities to be dedicated to the District; is authorized by the District to furnish materials within the District for use in connection with the District's facilities; and from whom the District will accept completed facilities so long as such facilities are constructed in accordance with the District's Rules and Regulations and Design and Construction Standards. All Contractors, hired by either the District, Developer or other persons or entities shall be required to comply with all District requirements.

"Design Engineer" shall mean the person, firm, partnership or corporation responsible for the preparation of construction plans, specifications, electronic drawing files, and field surveys.

“Design Report” shall mean the report that identifies the facilities, design philosophy, and design assumptions and criteria for potable, irrigation, and sanitary sewer systems.

“Design and Construction Standards” shall refer specifically to this document, entitled “Design and Construction Standards for Water and Wastewater Facilities.”

"Developer" shall mean any individual or entity who may own or be developing real property within the District and seeks water and/or wastewater service from the

District. A Developer shall be held directly responsible by the District for ensuring that all work performed by it or its Contractor(s) is completed in accordance with all District requirements.

"Development Review Team" shall refer to the District work group to whom all design report and construction plan submittals shall be directed.

"District" shall mean the South Adams County Water and Sanitation District.

"District Representative" shall mean any SACWSD employee, consultant, or other person authorized by the District to conduct and carry out business on behalf of the District.

“Electronic drawing files” shall mean the electronic computer files of the hard-copy construction plans submitted to the District in an acceptable electronic format. A copy of the District’s standards for submitting electronic drawing files for approved and record water and wastewater plans is provided in Appendix A.

"Fire service line" shall mean a water line constructed for the purpose of supplying an interior fire sprinkler system.

“General Improvement District (GID)” shall mean a general improvement district organized by the City of Commerce City, which may include the Commerce City Northern Infrastructure General Improvement District, the E-470 Commercial Area General Improvement District, or the E-470 Residential Area General Improvement District.

"Irrigation main" shall mean a non-potable water main designed and constructed for the purpose of conveying non-potable water to irrigated areas within residential, commercial, and industrial developments and to irrigated open spaces, parks, streetscapes, and other miscellaneous common areas.

“Irrigation service line” shall mean the section of privately owned pipe from just outside the meter pit on the customer side of the pit to the residential, commercial, or industrial facility. The District shall own the service line from, and including, the meter pit to a District irrigation water main.

“Lift Station” shall mean a wastewater pumping station that pumps wastewater to a different point when the continuance of the gravity sewer at reasonable slopes would involve excessive depths of bury or that pumps wastewater from areas too low to drain into available sewers. This definition does not include wastewater pumping stations that are designed to receive 2,000 gpd or less of domestic wastewater. Lift stations are appurtenances to domestic wastewater treatment works. Force mains are equipment of lift stations.

“Master Plan” shall refer to the document entitled “Water and Wastewater Systems Master Plan” which represents planning level information that projects population, demands, flows, and facility requirements for the District with regard to the potable water, irrigation water, and wastewater collection systems.

“Metro Water Recovery” shall refer to the large, stand-alone special district formed by the Colorado legislature as the Metropolitan Denver Sewage Disposal District No. 1 in 1961 to provide wastewater transmission and treatment services to member municipalities and special connectors in compliance with federal, state and local laws.

"Multi-family dwellings or lots" shall refer generically to multiple unit construction including duplexes, townhouses, condominiums, and apartment buildings.

"Potable main" shall mean a potable water main designed and constructed for the purpose of conveying potable water and fire flows to residential, commercial, and industrial customers.

“Potable service line” shall mean the section of privately owned pipe from just outside the meter pit on the customer side of the pit to the residential, commercial, or industrial facility. The District shall own the service line from, and including, the meter pit to a District potable water main.

"Professional Engineer" shall mean a person qualified by education and experience to practice engineering and holding a certificate of registration issued by the State of Colorado.

“Professional Office Building” shall mean a facility characterized by activities conducted in an office environment generally focusing on business, government, legal or financial professions. Examples include, but are not limited to, lawyers, accountants, engineers, banking, and real estate professionals. Specifically excluded from this definition are restaurants, cooking and any other professions or facilities which may pose special consideration for sanitary sewer waste streams. The purpose of this designation is to permit common water and sanitary sewer taps to occupants of a multi-office facility, as though it were a single business.

“Project plans” or “construction plans” shall mean the hard-copy construction drawings submitted to the District.

“Record Documents” or “As-Builts” shall mean construction plans and electronic drawing files that have been modified to reflect all as-constructed changes made during the construction phase of the project. See Appendix A for required Record Documents information.

“Rules and Regulations” shall refer to the document entitled "South Adams County Water and Sanitation District Rules and Regulations," which covers the following:

"General Provisions" (Article I) regarding the operation of District facilities and the provision of water and wastewater service to its customers; "Requirements for Acquiring Water and Wastewater Service from the District" (Article II); "Limitations on Discharge" (Article III); "Industrial Pretreatment Program" (Article IV); "Cross-Connection Control and Backflow Control Policy and Regulations" (Article V); "Water Conservation Program" (Article VI), and any other provisions the District's Board of Directors determines to add or amend from time-to-time.

"Sanitary sewer" shall mean sewer facilities designed and constructed for the purpose of collecting wastewater from District customers and conveying it to treatment facilities.

"Service Application" shall refer to the document required by the District from a customer to apply for potable water, irrigation water, or sanitary sewer service from the District. Included in the application are a Water Questionnaire, a Water Customer Data/Fixture Value Sheet, a Wastewater Questionnaire, and other materials as deemed relevant by District staff.

"Service line" shall mean the pipe connecting an individual residential, commercial, or industrial facility to a District potable main, irrigation main, or sanitary sewer.

"Single-family dwellings or lots" shall refer specifically to single-family detached residential house or lot construction.

"Specifications" shall refer to all information, whether contained within this document or supplemental, that defines required District construction materials and the means by which those materials shall be installed within the District's service area.

"Standard Details" shall mean those design details included in Section 6 of the District's Design and Construction Standards.

"Water main" or "water system" shall be used generically to refer to either a potable, irrigation, or combined water main or system, designed and constructed for the purpose of delivering potable or irrigation water to District customers.

1.4 SUBMITTAL PROCEDURES

The submittal procedures outlined herein assume that the party interested in obtaining water and wastewater service from the District has complied with, or intends to comply with, the District's Rules and Regulations, including payment of all fees and inclusion into the District. Annexation into Commerce City and/or acceptance into an applicable GID, or other entities may be required as a condition of service. A Water Resources Agreement with the District is required as part of the preliminary design submittal.

The District's Design and Construction Standards apply to all potable water, irrigation water, and wastewater collection facilities to be constructed within the District. In the event that materials and installation procedures required by a project are not explicitly addressed in the Design and Construction Standards supplemental details and specifications shall be submitted to the District for review in conjunction with the project plans.

All approvals required by the District must be obtained **prior to** the scheduling of the pre-construction meeting and prior to the start of any construction activity. Submittals shall be made in accordance with the procedures set forth herein and as may otherwise be required by the District. Plans and specifications shall be prepared by, or under the direct supervision of a Professional Engineer.

The District's review will be to determine whether the plans and specifications are in full conformance with the District's Rules and Regulations and Design and Construction Standards. This review will not relieve the Design Engineer or the Contractor of responsibility for any errors or omissions. Review and approval by the District shall not constitute an assumption of any duty or liability by the District or any of its professional consultants for the adequacy of the design or proper construction of the project. The District reserves the right to deny service to anyone not in compliance with all requirements promulgated by the District.

1.4.1 PRELIMINARY DESIGN SUBMITTAL: MAIN EXTENSIONS, DISTRIBUTION SYSTEMS, COLLECTION SYSTEMS, IRRIGATION SYSTEMS

A preliminary design submittal shall be made to the District that includes a design report and preliminary construction plans. An acknowledgement form (Can Serve Letter) signed by a District Representative indicating the availability of water to supply the development shall also be included as part of the preliminary design submittal. A design report shall be submitted to address potable water distribution, irrigation water distribution, and wastewater collection. If the project is to be completed in phases whereby both the initial and ultimate conditions may dictate certain aspects of the design, all scenarios shall be evaluated and addressed in the report. One electronic portable document format (.pdf) file of the preliminary design submittal shall be provided to the District, and if necessary, subsequent electronic submittals (named and numbered with each iteration) shall be made until approval has been granted. The preliminary design submittal shall include the following primary elements:

General: A design report shall be provided that describes the proposed project in detail, including its location, size, construction timeframe and phasing, the type of development, and any additional information beneficial to convey the nature and scope of the project. As part of the design report, preliminary plans shall be submitted that clearly identify the areas to be served by the proposed facilities, the required extensions of existing District facilities to the areas of development, and

the proposed system layouts in relation to parcel and right-of-way data. The design report shall include:

- Combined Water System Data: Plans or schematics shall identify the location and number of all single and multi-family dwellings, school locations and sizes, if any, based on building square-footage and number of students, and the gross acreages, excluding right-of-way that does not include water consumption, associated with any commercial and industrial areas. The plans or schematics shall also identify the irrigated acreages associated with all multi-family complexes, commercial and industrial areas, landscaped common areas, streetscapes, school grounds, parks, and irrigated open spaces. Additionally, computations shall be provided that develop and substantiate the average irrigated area to be assumed for each single-family residential lot. Multiple average values shall be developed for single-family lots if varying lot densities exist within the development.

  Spreadsheets shall be prepared using District design values that compute the combined water demands and wastewater flows associated with each of the housing units, schools, and commercial and industrial areas identified on the plans. All assumptions used to compute the tabulated values shall be clearly stated and all columns totaled. Additional information pertinent to developing combined water demands and wastewater flows is provided in Sections 2 and 3, respectively, of this document.

- Potable – Only Water and Wastewater Data: Plans or schematics shall identify the location and number of all single and multi-family dwellings, school locations and sizes, if any, based on building square-footage and number of students, and the gross acreages, excluding right-of-way that does not include water consumption, associated with any commercial and industrial areas. Calculations shall be prepared using District design values that compute the potable water demands and generated wastewater flows associated with each of the housing units, schools, and commercial and industrial areas identified on the plans. All assumptions used to compute the tabulated values shall be clearly stated and all columns totaled. Additional information pertinent to developing potable water demands and wastewater flows is provided in Sections 2 and 3, respectively, of this document.

- Irrigation – Only Water Data: Plans or schematics shall be utilized to identify the irrigated acreages associated with all multi-family complexes, commercial and industrial areas, landscaped common areas, streetscapes, school grounds, parks, and irrigated open spaces. Additionally, computations shall be provided that develop and substantiate the average irrigated area for each single-family residential

lot. Multiple average values shall be developed for single-family lots if varying lot densities exist within the development. Calculations shall be prepared using District design values that compute the demands associated with each of the irrigated areas identified on the plans. All assumptions shall be clearly stated and all columns totaled. Additional information pertinent to developing irrigation demands is provided in Section 4 of this document.

- Design Conditions: Demands and flow rates as required by the preceding paragraphs shall be developed for the following design conditions:

  Average day, maximum day, and peak hourly demands shall be developed and tabulated for proposed potable-only, irrigation-only, and combined water delivery systems. Combined water system demands are based on potable – only demands plus irrigation demands.

  Average daily flow and peak flow rates shall be developed and tabulated for proposed wastewater collection systems.

- System Evaluations: High quality and legible schematics shall be provided that depict the pipeline layouts of the proposed systems and the corresponding results of the evaluations. Required information to be identified on the schematics shall include, but not be limited to, line sizes, points of connection to existing District facilities, and the magnitude and location of demands or flows as assigned to the network and collection system models. If new facilities will be installed in phases, each phase shall be evaluated and modeled with schematics provided for each phase. Tabular or graphical results of the hydraulic analyses and any additional computations necessary to demonstrate compliance with District criteria shall be provided with all assumptions clearly stated. Design criteria pertinent to analyzing hydraulic networks for potable and irrigation water systems are detailed in Sections 2 and 4, respectively, of this document. Design criteria pertinent to analyzing wastewater collection systems are provided in Section 3.

1.4.2 FINAL DESIGN SUBMITTAL: MAIN EXTENSIONS, DISTRIBUTION SYSTEMS, COLLECTION SYSTEMS, IRRIGATION SYSTEMS

One .pdf construction plans shall be submitted for review and acceptance by the District; and four full-size 24 x 36 copies containing the potable water, irrigation water, and wastewater collection system plan set shall be provided (two sets for Developer, one set for SACWSD inspector, one set for SACWSD records. If necessary an additional fifth copy may be required for the Fire Department with the District signature. Each set shall provide the design information that graphically identifies the storm sewer, sanitary sewer, irrigation water, and potable

water utility locations and appurtenances by showing the line-work for the featured utility at regular weight and the line-work for the other utilities as screened background information. One .pdf of any details and specifications for items not covered by the District's Design and Construction Standards and one .pdf copy of the soils report prepared by a Professional Engineer for the project area shall also be submitted.

One original copy stamped by a Professional Land Surveyor of necessary easements for all District utilities to be located outside the public right-of-way shall also be submitted for District review. An example copy of the District's "Easement and Right-of-Way Agreement" has been provided in Appendix C. It shall be the Developer's responsibility to obtain the current version of this agreement directly from the District.

Revision and resubmittal shall be made until final approval has been granted by the District.

Project plans shall be prepared on 24-inch by 36-inch sheets as well as electronic PDF file. Each sheet shall identify the project by name, the name of the Developer, and the name of the Design Engineer. Sheets shall be sequentially numbered and shall indicate the date of preparation as well as revision dates and descriptions. Plans shall be complete and shall include but not be limited to information contained in Appendix B.

1.4.3 SERVICE TAP SUBMITTALS

The following subsections detail information that must be submitted to the District for review and approval prior to starting construction on any MFR, COM, and IND service line. Non-commercial businesses (IND) will be handled on a case-by-case basis. Approval of this information will be based on compliance with the District's Rules and Regulations and Design and Construction Standards. Upon approval, all required inspections must be passed, all fees must be paid, and all other District regulations complied with prior to the line being put into service. Water meter installation shall be performed exclusively by representatives of the District. Customer abbreviations defined at the outset of this document and utilized in the sections to follow are restated below.

SFR:	Single-Family Residential
MFR:	Multi-Family Residential
COM:	Commercial
IND:	Industrial
P/O:	Parks / Open Space
ERU:	Equivalent Residential Unit

1.4.3.1 POTABLE-ONLY WATER SERVICE TAP

A cover sheet with applicant information shall be submitted to the District along with a Service Application for review for potable-only water service. Submittals for service to MFR, COM, IND, and P/O customers shall include fixture count tabulations in accordance with AWWA M22, design flow rate computations, and the proposed meter and service line sizes. Fixture counts are not required for SFR taps or for MFR taps where separate service lines are run to each individual unit and metered separately. Construction plans or schematics must show tap locations along the distribution mains, the service line alignments, and any crossing or adjacent utilities, both proposed and existing. Plumbing plans must indicate the location and descriptions of all backflow prevention facilities/devices.

1.4.3.2 IRRIGATION-ONLY WATER SERVICE TAP

A cover sheet with applicant information shall be submitted to the District along with a Service Application for review for irrigation-only water service. Submittals for irrigation service to MFR, COM, IND, and P/O customers shall include a map identifying the tracts to be irrigated, a tabulation of the area associated with each tract, design flow rate computations, the location and description of backflow prevention facilities/devices, and the proposed meter and service line sizes. This information is not required for SFR taps. Construction plans or schematics must show tap locations along the distribution mains, the service line alignments, and any crossing or adjacent utilities, both proposed and existing.

Generally, the final arrangement of tap locations and sizes for open space, parks, streetscapes, and other miscellaneous landscaped common areas will not be known until the sprinkler systems serving these areas have been designed by the Developer's landscape architect. Upon completion of the design, sprinkler system plans shall be submitted to the District to document the final tap locations, sizes, flow rates, and irrigated acreages for landscaped areas not associated with detached single-family lots. If, in the opinion of the District, these irrigated acreages are markedly different from the acreages assumed in the preliminary design report and subsequently incorporated into the hydraulic modeling, the District may require that the irrigation distribution system be remodeled to assess its adequacy, and may ultimately impose limitations on the irrigation service provided to the altered properties.

1.4.3.3 COMBINATION POTABLE-IRRIGATION WATER SERVICE TAP

A tap is designated "combination" when made to a potable line with the intention of supplying both potable and irrigation service. Taps of this nature will exist in areas that have not been master-planned for dual systems, and in areas where dual systems have been planned but where the District has specifically approved irrigation use off the potable distribution system for a particular customer. In both cases, information submitted to the District for review must include all the items identified in the preceding two subsections regarding tap requirements for separate systems. Potable and irrigation demands shall be developed separately and then

superimposed to establish the design flow rate for the service line. Consequently, a fixture count analysis is required for the potable component and an irrigated area analysis is required for the irrigation component. Backflow prevention information shall also be provided for review.

1.4.3.4 SANITARY SEWER SERVICE TAP

Construction plans or schematics shall be submitted that show the location and station of sanitary sewer taps along the wastewater collection system, the service line layouts, and any crossing and adjacent utilities, both proposed and existing. Additional submittal requirements shall include flow rate computations, proposed service line sizes and slopes, and the, for review and approval in association with Metro Water Recovery.

All commercial users are required to submit a completed District Wastewater Questionnaire, with original signature from the property/facility owner or other authorized representative in order to comply fully with the District's industrial users pretreatment requirements as provided in the District's Rules and Regulations.

1.4.3.5 PROFESSIONAL OFFICE BUILDING TAP

The Professional Office Building designation is to permit common water and sanitary sewer taps to occupants of a multi-office facility, as though it were a single business. The requirements for water, sewer, and irrigation facilities for each Professional Office Building development will be dealt with on a case by case basis by the District.

1.4.4 CHANGES TO APPROVED PLANS

Changes required to correct design errors or to adjust for field conditions shall be approved by the District prior to the installation or adjustment to the affected portion of the project. Where changes are significant in the opinion of the District, resubmittal of the plans following the procedures in Section 1.4 shall be required.

1.4.5 RECORD DOCUMENTS

The Contractor shall safely maintain in good working order at the project site, one copy of all approved plans, specifications, addenda, written amendments, change orders, work change directives, field orders, and written interpretations and clarifications, clearly annotated to describe all changes made during construction. These documents, together with all approved shop drawings, shall be available for reference at the request of the District.

Upon completion of the work, any deviations from the approved design and any pertinent notes and comments regarding construction conflicts shall be transferred to the approved plans and electronic drawing files and subsequently submitted to

the District as the “Record Documents” for the project. The submittal shall consist of one full-size plan set with edits/changes clearly notated and the corresponding record electronic drawing files in both AutoCAD meeting SACWSD current software standards and Adobe pdf format. The full-size plan sets shall bear the seal and signature of a Professional Engineer registered in the State of Colorado and the electronic drawing files shall conform to the latest edition of the District’s mapping standards.

1.5 STEP-BY-STEP PROCEDURAL SUMMARY FOR DEVELOPING WATER AND WASTEWATER FACILITIES WITHIN THE DISTRICT

The step-by-step procedure that must be complied with for constructing water and wastewater facilities within the District is described below. The list is intended to summarize and underscore for the Developer, the Design Engineer and Contractor, the requirements of the District associated with the design submittal, plan approval, construction, inspection, and acceptance phases of a project. Depending on the nature of the project, only certain items may apply.

1. Developer/Owner contacts the District's Development Review Team to discuss, at a minimum, the following:

    a. General description of the project, including size, land-use mix and location.

    b. Acquisition and availability of water rights within the District (discussed in Article II of the District's Rules and Regulations) or the water right the Developer is proposing for service.

    c. Project requirements based on the development's proximity to existing and master-planned District facilities, proposed alluvial irrigation wells, and high-pressure arterial irrigation mains.

    d. Developer responsibilities for cost, design, and construction of master-planned utilities within the District.

    e. Water Resource, Inclusion, and Easement Agreements

2. Developer/Owner obtains copies of the District's Rules and Regulations and Design and Construction Standards and agrees to comply with all District requirements as established in these documents.

3. For all non-residential users, the Developer/Owner shall contact the District’s Industrial Pretreatment Program Coordinator to determine whether additional Industrial User Wastewater Discharge Requirements will be needed. Water service will not be initiated until the District’s

Industrial Pretreatment Program Coordinator has approved the application.

4. Developer/Owner submits required applications for obtaining service from the District and receives subsequent District acceptance of such applications.

5. "Preliminary design submittals" for each utility in accordance with Section 1.4.1 of the District's Design and Construction Standards are transmitted to the District's Development Review Team for review and approval. Upon receiving comments for correction by the Review Team (if any), the Developer/Owner shall provide written response to each comment with subsequent re-submittals.

6. "Final design submittals" for each utility in accordance with Section 1.4.2 of the District's Design and Construction Standards, and any required "Service Applications" in accordance with Section 1.4.3, are transmitted to the District's Development Review Team for review and approval.

7. Complete and acceptable Service Applications shall be made to the District's Development Review Team in accordance with Section 1.4.3 of the District's Design and Construction Standards. Incomplete Service Applications will be denied and returned to the Applicant.

8. The District shall review Service Applications for compliance with District requirements, including pre-treatment facilities associated with sewer services, backflow control devices associated with water services, and fixture value data sheet for indoor and outdoor use in order to adequately determine tap size. Reviews continue until the Developer/Owner receives written approval of the submittal from the District's Development Review Team.

9. Upon approval of the final design submittal, electronic drawing files shall be submitted in accordance with the requirements listed in Appendix A. Any aspect of the electronic drawing files found not to conform with the District’s mapping standards will require that the files be resubmitted, delaying the scheduling of the pre-construction meeting.

10. Upon approval of the final design submittal, all required deliverables identified in Section 1.4.2 of the District's Design and Construction Standards shall be conveyed to the District's Development Review Team.

11. If necessary or advisable, the Development Review Team will set a meeting with the Adams County Water Quality Association, the area’s 208 agency, to seek approval for wastewater constructs such as lift

stations. If the project is accepted, the Adams County Water Quality Association will notify the Colorado Department of Public Health and Environment of their approval.

12. The Development Review Team will provide the necessary approval signatures and convey signed copies of the plans back to the Developer and Contractor at the pre-construction meeting.

13. Pre-construction meeting shall be scheduled and conducted with the District's Development Review Team.

14. Developer/Owner begins construction.

15. Inspection of gravity and force main sanitary sewer mains by a District Representative.

16. Manhole vacuum air testing, and sanitary sewer pressure and deflection testing witnessed by a District Representative.

17. Sanitary sewer mains shall be CCTV video inspected with an approved pipe report prior to final acceptance.

18. Inspection of potable and irrigation water mains by a District Representative.

19. Potable and irrigation water main chlorine tests conducted by a District Representative.

20. Potable and irrigation main pressure tests witnessed by a District Representative.

21. Potable and irrigation main clear water tests conducted by a District Representative.

22. Potable and irrigation water systems activated by a District Representative.

23. Service inspections are to be physically observed by a District Representative for sanitary sewer services, potable and irrigation water services, fire services, grease interceptors, sand/oil interceptors, backflow prevention devices, etc.

24. Tracer wire and electronic marking device inspections by a District Representative to determine continuity of all wire runs and functionality of all electronic marking devices along potable and irrigation water

mains, service lines, fire lines, and gravity sewer mains, service lines, and force mains and shall be in compliance with Colorado State Laws.

25. Backflow prevention device testing documentation required by a District Representative, excluding devices installed on single family residential service lines.

26. Developer/Owner submits Record Documents to the District, including final plat information, record construction plans, and record electronic drawing files associated with the completed project. Exhibit A of the District's "Grant and Acceptance of Utilities Agreement" shall be completed by the District to acknowledge receipt of the above items and will subsequently be made an official part of the Agreement.

27. Developer/Owner signs the "Grant and Acceptance of Utilities Agreement", with Exhibits A and B signed and attached, and conveys executed easements. District will review and sign if everything is in order.

28. Warranty period begins once the District receives signed and executed “Grant and Acceptance of Utilities Agreement” deemed to be acceptable by the District, as evidenced by its execution of the same.

29. Developer/Owner pays District tap fees and executes all required water rights transfers for the provision of service within the District.

30. District Representative installs potable and irrigation water meters.

31. Final inspection of facilities by District Representative prior to expiration of the warranty period.

32. Warranty repairs, as required by the District, shall be made by the Developer/Owner.

1.6 DISTRICT MASTER PLAN COMPLIANCE

All proposed facilities shall comply with District criteria and be designed with sufficient capacities to meet, at a minimum, the service needs generated by the proposed development. Developers are advised that the District has prepared master plans within its service area for potable and irrigation water distribution and wastewater collection, which require facilities in certain locations to accommodate regional infrastructure requirements.

The arterial irrigation system will be developed and constructed by the District. In the event that the Developer is directed by the District to construct a portion of a master-planned arterial irrigation main in conjunction with the development, the Contractor may be reimbursed for the costs of the arterial main. An executed written agreement must be in place with the District prior to construction of an arterial irrigation main in order for reimbursement. In contrast to the irrigation system, costs required to construct potable water mains and sanitary sewers in accordance with the District's master plans will be paid for by the Developer as an obligational cost of developing land within the District. These requirements shall be discussed during the initial service meeting noted in Section 1.5. Payment assistance from the District via rebate agreements or other form of cost recovery will not be made available to any Developer.

1.7 EXTENSION OF POTABLE WATER AND WASTEWATER SERVICE

When no existing District facilities exist adjacent to a proposed development, it shall be the Developer’s responsibility to pay for the extension of existing potable water and wastewater collection facilities to provide service to the site. Moreover, it shall be each Developer’s responsibility to extend these facilities to the most distant point (or points) in each development, as determined by the Development Review Team, so that adjacent developments are in turn able to continue extending the facilities in the future. The requirements governing the extension of potable water and wastewater facilities are described in detail in the District's Rules and Regulations.

1.8 USE OF EASEMENTS

Water and wastewater facilities shall be located inside public rights-of-way whenever possible and shall be offset from the right-of-way line a minimum of 5 feet. The District will review and approve the dedication of easements when the construction of District facilities within public rights-of-way is not feasible. When pipelines are constructed in easements, the minimum easement width shall be 30 feet unless the easement is contiguous to a public right-of-way, in which case the minimum easement width shall be 20 feet. Easements shall be accurately shown on the plans and all pipelines and appurtenances shall be a minimum of 5 feet inside the easement. Access must remain open to all facilities located in easements per the terms and conditions of the easement agreements. In the event that multiple utilities are to be allowed in nonexclusive easements, the District may require wider easements. Exclusive easements may be required for Master Planned pipelines. Easements shall be dedicated to the District through the District’s standard “Easement and Right-of-Way Agreement,” which shall be prepared and recorded by the District. The District’s form of “Easement Agreement” as of the date of this document is provided in Appendix C. The District’s form of Easement Agreement may be modified without updating the form in Appendix C.

1.9 START OF CONSTRUCTION

No work shall begin on any water or wastewater construction project until the final design submittal has been signed and stamped by the District and returned to the Developer. Site grading shall be completed in advance of installing any District water and/or wastewater facilities. All appropriate grading, street cut or right-of-way permits shall also be obtained from either Commerce City or Adams County prior to the commencement of construction.

Construction must start within one year from the date approval is granted by the District. If construction is not started within that time, or if construction is started and subsequently stopped for more than one year, the District's approval of the plans, specifications, and electronic drawing files shall be deemed suspended, and the same shall be resubmitted for approval in accordance with Section 1.4 and shall comply with the then-current design standards.

The Contractor shall also schedule a pre-construction meeting with the District prior to the start of any construction. The pre-construction meeting shall be attended by the Contractor, Developer, appropriate District Representatives, and any interested representatives of affected utilities. The Contractor shall bring to the meeting shop drawings and other necessary submittals and documentation of materials and equipment to be installed in the work for review and approval. All materials to be used in the work shall be in accordance with the District's Approved Construction Materials List located in Appendix E.

The Contractor must notify the District at least 48 hours or 2 working days prior to the start of any construction within the District.

1.10 CONTRACTOR'S RESPONSIBILITIES

1.10.1 SUPERVISION AND SUPERINTENDENCE

The Contractor shall supervise, inspect, and direct the work competently and efficiently, devoting such attention to and applying such skills and expertise as necessary to perform the work in accordance with the Approved Documents. The Contractor shall be solely responsible for the means, methods, techniques, sequences, and procedures of construction, but shall not be responsible for the negligence of others in the design or specification of a specific means, method, technique, sequence, or procedure of construction that is represented, referred to, or expressly required in the Approved Documents. The Contractor shall be responsible for insuring that the completed work accurately conforms to the Approved Documents.

The Contractor shall keep on the work at all times during its progress a competent resident superintendent, who shall not be replaced without written notice to the District, except under extraordinary circumstances. The superintendent will be the Contractor's representative at the site and shall have authority to act on behalf of the Contractor. All communications given to the superintendent shall be binding as if given to the Contractor.

1.10.2 LABOR, MATERIALS, AND EQUIPMENT

The Contractor shall provide competent, qualified personnel to survey, layout, and construct the work as required by the Approved Documents. The Contractor shall at all times maintain good discipline and order at the site. Except as otherwise required for the safety or protection of persons, the work, or property at the site or adjacent thereto, and except as otherwise indicated in the Approved Documents, all work at the site shall be performed during regular working hours, and the Contractor will not permit overtime work or the performance of work on Saturday, Sunday, or any legal holiday, except under emergency conditions, without the District's written consent subsequent to prior notice to the District and acknowledgement of additional fees to be paid by the Contractor/Developer. When Saturday, or Sunday work is requested, the Contractor shall provide a minimum of five (5) working days' written notice to the District for approval.

Unless otherwise specified, the Contractor shall furnish and assume full responsibility for all materials, equipment, labor, transportation, construction equipment and machinery, tools, appliances, fuel, power, light, heat, telephone, water, sanitary facilities, temporary facilities, and all other facilities and incidentals necessary for the furnishing, performance, testing, startup, and completion of the work.

All materials and equipment shall be new and of good quality and meet all District standards, except as otherwise provided in the Approved Documents. All warranties and guarantees specifically called for by the specifications shall expressly run to the benefit of the District. If required by the District, the Contractor shall furnish satisfactory evidence (including reports of required tests) as to the kind and quality of materials and equipment. All materials and equipment shall be applied, installed, connected, erected, used, cleaned, and conditioned in accordance with instructions of the applicable supplier, except as otherwise provided in the Approved Documents. All materials must be in compliance with the District's Approved Materials List as provided in Appendix E.

1.10.3 SUBSTITUTES AND "OR-EQUAL" ITEMS

Whenever an item of material or equipment is specified or described in the Approved Documents by using the name of a proprietary item or the name of a particular supplier, the specification or description is intended to establish the type, function, and quality required. Unless the specification or description contains or

is followed by words indicating that no substitution shall be permitted, or that no like, equivalent, "or-equal" item is acceptable, other items of material or equipment, or material or equipment of other suppliers may be submitted to the District for review and approval.

1.10.4 PERMITS AND LICENSES

Developers shall be responsible for obtaining all permits and licenses from authorizing jurisdictions and paying all associated fees required for construction of District facilities, including crossings of streets, highways, irrigation ditches, railroads, and easements and rights-of-ways of other facilities. Street cut, right-of-way, and grading permits from local, state, or federal agencies are required prior to starting any construction in the public right-of-way. A Contractor working on behalf of a Developer shall obtain a Contractor's License from the District prior to commencing work. The Contractor is required to obtain the required permits, crossing agreements, licenses, other agreements from local, state, or federal authorizing jurisdictions prior to commencing work and shall submit the same to the District Representative. Compliance with the requirements of all licenses and permits shall be the responsibility of the Developer during construction. The District shall be named as an assignee or the future owner of all crossing agreements, licenses, permits, and easements.

All Contractors performing work on new, or existing District facilities shall obtain and maintain a District Contractor's license and meet the terms of the Contractor License Application prior to commencing work.

1.10.5 LAWS AND REGULATIONS

The Contractor shall give all notices and comply with all laws and regulations applicable to furnishing and performance of the work ("Laws and Regulations"). Except where otherwise expressly required by applicable Laws and Regulations, District Representatives shall not be responsible for monitoring the Contractor's compliance with any Laws or Regulations.

1.10.6 TAXES

The Contractor shall pay all sales, consumer, use, and other similar taxes required to be paid by the Contractor in accordance with the Laws and Regulations pertinent to the location of the project, and applicable during the performance of the work.

1.10.7 SAFETY AND PROTECTION

The Contractor shall be responsible for initiating, maintaining, and supervising all safety precautions and programs in connection with the work. The Contractor shall take all necessary precautions for the safety of and shall provide the necessary protection to prevent damage, injury, or loss to all persons on the work site or

anyone who may be affected by the work, and to all work, materials and equipment to be incorporated therein, whether in storage on or off the site, and to all other property at the site or adjacent thereto, including trees, shrubs, lawns, walks, pavements, roadways, structures, utilities, and underground facilities not designated for removal, relocation, or replacement in the course of construction.

The Contractor shall comply with all applicable Laws and Regulations of any public body having jurisdiction for safety of persons or property so as to protect them from damage, injury, or loss, and shall erect and maintain all necessary safeguards for such safety and protection. The Contractor shall notify owners of adjacent properties, underground facilities, and nearby and conflicting utilities when prosecution of the work may affect them and shall cooperate with them in the protection, removal, relocation, and replacement of their property. The Contractor's duties and responsibilities for safety and protection of the work shall continue until such time as all the work has been completed and accepted by the District.

The District does not assume any liability for any work performed by the Contractor. No claim shall be made against the District or any of its officers or employees on account of errors of omission or commission made by the Contractor. The Contractor shall indemnify, defend, and hold harmless the District from any loss or damage that may directly or indirectly result from the Contractor's work.

1.10.7.1 SAFETY REPRESENTATIVE

The Contractor shall designate a qualified and experienced safety representative at the site whose duties and responsibilities shall be the prevention of accidents and the maintaining and supervising of safety precautions and programs.

1.10.7.2 HAZARD COMMUNICATION PROGRAMS

The Contractor shall be responsible for coordinating any exchange of "material safety" data sheets or other hazard communication information required to be made available to or exchanged between or among employers at the site in accordance with all applicable Laws and Regulations.

1.10.7.3 EMERGENCIES

In emergencies affecting the safety or protection of persons, the work, or property at the site or adjacent thereto, the Contractor, without special instruction or authorization from the District or District Representative, is obligated to act to prevent threatened damage, injury, or loss.

1.10.8 SANITARY FACILITIES

The Contractor shall furnish temporary sanitary facilities at the site for the needs of all construction workers and others performing work or furnishing services on the project. Sanitary facilities shall be of reasonable capacity, properly maintained throughout the construction period, and obscured from public view to the greatest practical extent. The Contractor shall enforce the use of such sanitary facilities by all personnel at the site.

1.10.9 MAINTENANCE OF TRAFFIC

The Contractor shall conduct its work to interfere as little as possible with public travel, whether vehicular or pedestrian. Whenever it is necessary to cross, obstruct, or close roads, driveways, and walks, the Contractor shall provide and maintain suitable and safe bridges, detours, or other temporary expedients for the accommodation of public and private travel and shall give reasonable notice before interfering with them. A traffic control plan subject to Commerce City, Adams County, or CDOT approval is required prior to issuance of a street cut or right-of-way permit for any work in the public right-of-way. Such maintenance of traffic will not be required when the Contractor has obtained permission from the owner and tenant of private property, or from the authority having jurisdiction over public property involved, to obstruct traffic at the designated point.

1.10.10 UNFAVORABLE CONSTRUCTION CONDITIONS

During unfavorable weather, wet ground, or other unsuitable construction conditions, the Contractor shall confine its operations to work that will not be affected adversely by such conditions. No portion of the work shall be constructed under conditions that would adversely affect the quality or efficiency thereof, unless special means or precautions are taken by the Contractor to perform the work in a proper and satisfactory manner.

1.10.11 TEMPORARY DRAINAGE PROVISIONS

The Contractor shall provide for the drainage of storm water, surface water, groundwater, and such water as may be applied or discharged on the site in performance of the work. Drainage facilities shall be designed to prevent the entry of such waters into the District's wastewater collection system. The Contractor shall be responsible for the cost of all damages resulting from the introduction of such waters into the District's wastewater collection system. Drainage facilities shall be adequate to prevent damage to the work, the site, and adjacent or tributary properties.

Existing drainage channels and conduits shall be cleaned, enlarged, or supplemented as necessary to carry all increased runoff attributable to the Contractor's operations. Dikes shall be constructed as necessary to divert increased runoff from entering adjacent property (except in natural channels), to protect the Owner's facilities and the work, and to direct water to drainage channels

or conduits. Ponding shall be provided as necessary to prevent downstream flooding.

1.10.12 EROSION AND DUST CONTROL

The Contractor shall prevent erosion of soil on the site and adjacent property resulting from construction activities. Effective measures shall be initiated prior to the commencement of clearing, grading, excavation, or other operation that will disturb the natural protection.

Work shall be scheduled to expose areas subject to erosion for the shortest possible time, and natural vegetation shall be preserved to the greatest extent practical. Temporary storage and construction buildings shall be located, and construction traffic routed, to minimize erosion. Temporary fast-growing vegetation or other suitable ground cover shall be provided as necessary to control runoff.

The Contractor is alerted to the fact that severe dust problems are likely to occur during construction. The Contractor, to the satisfaction of the District, shall be responsible for the control of dust resulting from construction activities.

1.10.13 POLLUTION CONTROL

The Contractor shall prevent the pollution of storm drains and watercourses by sanitary wastes, sediment, debris, and other substances resulting from construction activities. No sanitary wastes will be permitted to enter any drain or watercourse other than sanitary sewers. No sediment, debris, or other substance will be permitted to enter sanitary or storm sewers, and reasonable measures shall be taken to prevent such materials from entering any drain or watercourse.

The Contractor shall be responsible for the removal of debris or other substances that may enter the District's wastewater collection system or the storm sewer system and shall be responsible for all costs related to such removal and for any damages caused by such debris or substance.

1.10.14 NOTICES TO OWNERS AND AUTHORITIES

The Contractor shall notify owners and residents in writing of utilities related work that may affect them at least 48 hours prior to commencing work.

When it is necessary to temporarily deny access to property, or when any utility service connection must be interrupted, the Contractor shall give notices sufficiently in advance to enable the affected persons to provide for their needs. Notices will conform to any applicable local ordinance and, whether delivered orally or in writing, will include appropriate information concerning the interruption and instructions on how to limit inconvenience caused thereby.

Utilities and other concerned agencies shall be contacted at least 48 hours prior to cutting or closing streets or other traffic areas or excavating near underground utilities or pole lines.

1.10.15 USE OF PREMISES

The Contractor shall confine construction equipment, the storage of materials and equipment, and the operations of workers to the site and land areas identified in and permitted by the Approved Documents and other land and areas permitted by Laws and Regulations, rights-of-way, permits and easements, and shall not unreasonably encumber the premises with construction equipment or other materials or equipment. The Contractor shall assume full responsibility for damage to any such land or area, to the owner or occupant thereof, or to any adjacent land or areas resulting from the performance of the work.

Should any claim be made by any such owner or occupant because of the performance of the work, the Contractor shall promptly settle with such party by negotiation or otherwise resolve the claim by arbitration or other dispute resolution proceeding or at law. The Contractor shall, to the fullest extent permitted by Laws and Regulations, indemnify, defend, and hold harmless the District, District Representatives, and anyone directly or indirectly employed by any of them from and against all claims, costs, losses, and damages arising out of or resulting from any claim or action, legal or equitable, brought by any such owner or occupant against the District, District Representatives, or any other party indemnified hereunder, to the extent that such claims, costs, losses and damages have been caused by, or are based upon the Contractor's performance of the work.

1.10.16 LIMITED CONSTRUCTION SPACE

The Contractor is not to encroach upon private property during the construction, unless he has made appropriate arrangements with the property owner. The Contractor may use whatever method of dirt handling he shall choose within accepted practice. All side slopes or road fills and existing drainage ditches within the right-of-way shall be returned to their original condition. No concessions will be made to the Contractor due to limited working space or increased difficulty of construction.

1.10.17 POWER POLE BRACING

When power poles exist near the construction, the Contractor shall notify the appropriate power company and request that the necessary poles be braced or relocated to accommodate construction of the facilities. Any costs for bracing and relocating power poles shall not be paid by the District.

1.10.18 SOD REPLACEMENT

Any sod requiring replacement shall be replaced in accordance with these instructions and specifications.

After the backfilling operation is completed for the facility, the sub-base shall be graded to ensure a uniform and even turf surface. All coarse soil lumps and other hard materials over one inch shall be removed.

New sod composition shall match that of the removed sod and shall be a minimum of 96% weed free. The Contractor shall be ready, if requested, to submit a sample of the sod he proposes to furnish. This sample shall act as a standard and any sod furnished not up to this standard, whether in place or not, may be rejected by the District. Soil thickness of sod cuts shall not be less than one inch. Strips of sod shall be laid with all seams tightly together. Sod shall be rolled to ensure an even surface and good contact with the sod base. A fertilizer (20-20-10) shall be spread at 10 pounds per 1,000 square feet after the sod is laid. Sod must be thoroughly watered after laying until saturated 2 inches below the sod. Water shall be provided by the Contractor unless specific arrangements are otherwise approved by the District.

It shall be the Contractor's responsibility to provide for the initial soaking and all watering of the new sod for the first 12 days. All sodded areas are to be alive and growing at the end of 12 days or be replaced by the Contractor at the Contractor's expense. If the sod is accepted by the District after this initial period, the responsibility for ensuring that the sod is watered and maintained shall pass from the Contractor to the property owners of the sodded areas.

1.10.19 RESPONSIBILITY FOR EXISTING UTILITIES, STRUCTURES

It shall be the responsibility of the Contractor to investigate and verify in the field, the existence and location of utilities whether shown on the approved plans or not. The Contractor shall be solely responsible for the protection of all structures or utilities, including pipes, cables, fences or similar items. Permission for the adjustment of existing utilities or other items or structures shall be obtained from the appropriate owners or agents.

1.10.20 CONNECTIONS TO EXISTING FACILITIES

Unless otherwise specified or indicated, the Contractor shall make all necessary connections to existing facilities, including structures, drain lines, and utilities such as water, wastewater, gas, telephone, and electric. In each case, the Contractor shall receive written authorization from the Owner or the owning utility prior to undertaking connections. The Contractor shall protect facilities against deleterious substances and damage.

Connections to existing facilities that are in service shall be thoroughly planned in advance, and all required equipment, materials, and labor shall be on hand at the time the connections are undertaken. Work shall proceed continuously (around the clock if necessary) to complete connections in the minimum time possible. Operation of valves or other appurtenances on existing utilities, when required, shall be by or under the direct supervision of the owning utility.

1.10.21 OPERATION OF DISTRICT FACILITIES

All operation of District valves and hydrants for the purposes of constructing, testing, chlorinating or flushing newly constructed water lines shall be performed by District personnel unless specific permission has been otherwise granted in writing by the District. A minimum of 48-hours or 2 working days' notice shall be provided to the District prior to any actual operation.

1.10.22 LINES AND GRADES

Basic horizontal and vertical control points shall be provided in the Approved Documents and all work shall be constructed to the lines, grades, and elevations established in these Documents. All survey, layout, and measurement work shall be performed by the Contractor as part of the work. The Contractor shall remove and reconstruct work that is improperly located at Contractor's own expense.

1.10.23 RESTORATION AND CLEAN-UP

The Contractor shall be responsible for removing and replacing any facilities within the construction zone that can be considered personal property of respective property owners. This work will include, but not be limited to, removal and replacement of mailboxes, shrubs, flowers, surface and underground irrigation piping, fences, rock gardens, concrete structures, sidewalks, drainage facilities, and any other material and debris that can be considered personal property. Storage of the relocated facilities shall be on the respective owners' property such that the construction procedures will not damage the facilities. Storage shall be in such a place as to not inconvenience the property owner or hinder the use of its property. The Contractor shall be responsible for any damage to the removed and replaced facility that has occurred due to its negligence or carelessness in disassembly, transportation, storage and reassembly of these facilities.

During progress of the work, the Contractor shall keep the premises free from accumulations of waste materials, rubbish, and other debris resulting from the work. At the completion of the work, the Contractor shall remove all waste materials, rubbish, and debris from and about the premises, as well as all tools, appliances, construction equipment and machinery, and surplus materials. The Contractor shall leave the site clean and ready for occupancy by the District or property owner and shall restore to original condition or better all property not designated for alteration by the Approved Documents.

1.10.24 CONFIDENTIALITY

Plans and specifications may include precise locations of critical public infrastructure and are required to be protected and not made available to the general public.

1.11 INSPECTION

1.11.1 ACCESS TO WORK

District Representatives, independent testing laboratories, and governmental agencies with jurisdictional interests will have access to the work at reasonable times for their observation, inspecting, and testing. The Contractor shall provide them proper and safe conditions for such access and advise them of the Contractor's site safety procedures and programs so that they may comply.

1.11.2 TESTS AND INSPECTIONS

The Contractor shall be responsible for contacting the District regarding all required tests and inspections during and at the completion of construction, and shall be responsible for the coordination and scheduling thereof. The scope and nature of the tests and inspections required by the District are identified in the step-by-step procedural summary provided in Section 1.5. In the event of emergencies requiring the repair or modification of District facilities, the District shall be notified, regardless of the time, to discuss the nature of the situation and how the required inspections will be handled.

With the exception of emergencies, inspection of facilities by the District or District's Representative shall not be performed or scheduled between 3:30 p.m. and 8:30 a.m., Monday through Friday, nor on weekends or holidays. To schedule a test or inspection on a particular day, the request must be made by electronic mail, and must be received in the District office a minimum of 48 hours prior to the needed inspection, unless there is a legitimate emergency. In the event that work is required to be performed outside the previously stated times, the District shall be contacted a minimum of five (5) working days' notice in advance of the required inspections to make the appropriate arrangements. If the Contractor requires a test or inspection to be made outside of the times identified herein, an inspection fee with a two hour minimum shall be assessed and collected prior to each "after-hours" inspection, which fee will be defined in the District's Rates, Fees, Fines schedule as periodically updated and approved by the District's Board of Directors.

The Contractor will be assessed a re-inspection fee for an inspection following a failed inspection, and any subsequent inspection visits, for items that, in the opinion of the District Representative, have not been satisfactorily resolved, which fee will be defined in the District's Rates, Fees, Fines schedule as periodically

updated and approved by the District's Board of Directors. The re-inspection fee must be paid to the District in advance of requesting a re-inspection. Re-inspection fees will be assessed for violations on a "per address" basis and will be documented on the inspection report, which will be electronically mailed to the Contractor upon request.

If Laws or Regulations of any public body having jurisdiction specifically require any work to be inspected, tested, or approved by an employee or other representative of such public body, the Contractor shall assume full responsibility for arranging and obtaining such inspections, tests, or approvals, and shall pay all costs and furnish to the District the required certificates of inspection or approval. Where District facilities are specifically impacted, the Contractor shall be responsible for arranging and obtaining, and shall pay all costs in connection with, any inspections, tests, or approvals required by the District.

1.11.3 UNCOVERING WORK

If work to be inspected by the District is covered up prior to inspection, and if the District considers it necessary or advisable that covered work be observed, inspected, or tested, the Contractor, at the District's request, shall uncover, expose, or otherwise make available for observation, inspection, or testing by the District, that portion of the work in question, furnishing all necessary labor, material, and equipment at no cost to the District.

1.11.4 DISTRICT STOPPAGE OF WORK

If the work is defective, or the Contractor fails to supply sufficient skilled workers or suitable materials or equipment or fails to furnish or perform the work in conformance with the Approved Documents, the District may order the Contractor to stop the work, or any portion thereof, until the cause for such order has been eliminated.

1.11.5 CORRECTION OR REMOVAL OF DEFECTIVE WORK

If required by the District, the Contractor shall promptly, as directed, either correct all defective work, whether or not fabricated, installed, or completed, or, if the work has been rejected, remove it from the site and replace it with work that is not defective. The Contractor shall pay all claims, costs, losses, and damages caused by or resulting from such correction or removal (including, but not limited to, all costs of repair or replacement of work by others).

1.11.6 CORRECTION PERIOD

If within the warranty period defined in the District's "Grant and Acceptance of Utilities Agreement," or such longer period of time as may be prescribed by Laws and Regulations or by the terms of any applicable special guarantee or provision

required by the Approved Documents, any work is found to be defective, the Contractor shall promptly, without cost to District and in accordance with the District's written instruction: (i) correct such defective work, or, if it has been rejected, remove it from the site and replace it with work that is not defective, and (ii) satisfactorily correct or remove and replace any damage to other work or the work of others resulting therefrom. If the Contractor does not promptly comply with the terms of such instructions, or in an emergency where delay would cause serious risk of loss or damage, the District may have the defective work corrected or the rejected work removed and replaced, and all claims, costs, losses, and damages caused by or resulting from such removal and replacement (including, but not limited to, all costs of repair or replacement of work by others) will be paid by the Contractor.

1.12 GUARANTEE OF WORK

The Contractor shall guarantee all constructed water and wastewater facilities and appurtenances, including repaired street pavement, trench backfill, compaction, and roadside grading against defective work and materials for a period of two years starting from the date of the executed Grant and Acceptance of Utilities Agreement, and shall keep the same in good order and repair. The determination of the necessity for the Contractor to repair said water and wastewater facilities or appurtenances during the warranty period shall rest entirely with the District, whose decision shall be final and obligatory upon the Contractor.

1.13 OWNERSHIP TRANSFER

The District will accept ownership, operation, and maintenance responsibility for facilities only after the Grantor has accepted the terms and conditions of, and jointly executed with the District, the District's "Grant and Acceptance of Utilities Agreement." An example of the "Grant and Acceptance of Utilities Agreement" is provided in Appendix D.

1.14 CONSTRUCTION WATER

Construction water is available from the District provided the Contractor utilizes an approved and tested 3-inch hydrant meter and backflow prevention assembly. A 3-inch hydrant meter and backflow prevention assembly, if available, can be supplied by the District to the Contractor for the required deposit and under the terms and conditions set forth in the District's hydrant meter agreement obtainable at the District's main office.

Meter jumpers/idlers on the potable and irrigation water systems will not be allowed by the District.

1.15 CROSS-CONNECTION CONTROL REQUIREMENTS

Cross-connection and backflow prevention shall be in conformance with the latest edition of the District's Rules and Regulations, Article V.

1.16 UNDERDRAIN SYSTEMS

Each development proposing an underdrain system will be required to show the system plans and details on construction plans, and it will be approved by the District relative to District's owned water and sanitary sewer facilities. In no instance, shall any underdrain system be connected to a sanitary sewer system. The underdrain system shall be owned and operated by an entity other than the District with such information being identified on the approved construction plans.

The District shall treat any underdrain system as a sanitary sewer for the purposes of establishing the horizontal and vertical separation between an underdrain and any District utility. A minimum of 18 inches clear distance between the underdrain and all wastewater collection facilities`` must also be maintained. In the event that these requirements are found to be less restrictive than regulations promulgated by the State of Colorado through the Colorado Department of Public Health and Environment, Water Quality Control Division, State regulations shall take precedence.

1.17 WASTEWATER FACILITIES SITE LOCATION LIMITATIONS

The District will consider plans for wastewater collection facilities only if the following conditions are met:

- The area to be served must be consistent with the Urban Growth Boundary and Clean Water Plan planning area, as developed through the regional governing planning agency.

- The proposed facilities and service area must be consistent with the District's current Wastewater Utility Plan and Wastewater Collection System Master Plan.

1.18 WASTEWATER FACILITIES SITE APPLICATION REQUIREMENTS

Interceptors (24-inch diameter and larger) and lift stations require approvals from regional governing planning agencies that may include the Adams County Water Quality Association, the Denver Regional Council of Governments, and the Water Quality Control Division (WQCD) of the Colorado Department of Public Health and Environment under the *Regulations for the Site Application Process* (5 CCR 1002-22). The following conditions shall apply to such facilities:

- In the case of an interceptor or lift station requiring Site Application approval, Site Application procedures are considered to be part of the District's facility design responsibilities outlined in the District's

Rules and Regulations. When such facilities are required, the Developer will be responsible for Site Application costs incurred by the District.

- In the case of an interceptor requiring capacity certifications, the Developer shall provide the appropriate flow projections and proposed interceptor sizing to the District. If the District accepts the submitted information, it will initiate the certification process with the WQCD. The Developer will be responsible for Interceptor Certification costs incurred by the District.

- Where WQCD Site Application and/or approval is required, construction of wastewater facilities shall not commence until the District has obtained the appropriate WQCD approvals.

SECTION 2 – DESIGN REQUIREMENTS FOR POTABLE WATER DISTRIBUTION FACILITIES

2.1 GENERAL

All potable water distribution facilities shall conform to the District's Rules and Regulations and Design and Construction Standards. The District retains the right to adopt additional requirements and modify existing requirements as necessary for a particular project.

2.2 SYSTEM DESIGN

2.2.1 DISTRIBUTION SYSTEM DESIGN CRITERIA

This section provides information regarding the development of system demands and the requirements related to the hydraulic modeling of the computed demands with the proposed distribution system. Additional design criteria that will impact the final configuration of the proposed system such as looping, dead-ends, and minimum line size, are presented in Section 2.

All demands associated with full build-out of the development shall be accounted for in the hydraulic analyses used to size the distribution mains, and shall be appropriately allocated throughout the network in relation to where the demands will occur. In areas of the District where separate potable and irrigation distribution systems are master-planned, the demands associated with each system shall be developed separately using the design values in the appropriate columns of Table 2.1. The two systems shall then be modeled and analyzed independently. In areas of the District where potable water will be delivered conventionally through a single system for both potable and irrigation usage (combined system), demands shall be developed by combining the potable and irrigation values computed from Table 2.1. The single combined system shall then be modeled and analyzed in conjunction with the total demand.

Irrigation demands for combined systems and irrigation-only systems (detailed in Section 4) shall include the irrigated portions of all residential, commercial, and industrial properties, and shall include the irrigation of parks, open space and streetscapes located both inside and adjacent to the development. Furthermore, these demands shall include the irrigation of all tracts and parcels to be owned and maintained by Commerce City, a homeowners' association, or other similar entity.

TABLE 2.1

WATER SUPPLY DESIGN PARAMETERS

	Demand Type	
Average Daily Water Demand	**Potable**	**Irrigation**
Single Family Detached Residential	180 gpud	4,464gpiad
Single Family Attached or Multi-Family Residential	120 gpud	4,464 gpiad
Commercial[1]	450 gpgad	4,464 gpiad
Industrial[2]	450 gpgad	4,464 gpiad
Hotels	130 gprd	4,464 gpiad
Schools	10 gpsd	4,464 gpiad
Parks, Open Space, Irrigated Areas[3,4]	n.a.	4,464 gpiad
Peaking Factors, Maximum Daily Flow	Multiply Average Day Potable by:	Multiply Average Day Irrigation by:
Single Family Detached Residential	1.91	2.36
Single Family Attached or Multi-Family Residential	1.91	2.36
Commercial[1]	2.7	2.36
Industrial[2]	2.7	2.36
Hotels	2.7	2.36
Schools	1	2.36
Parks, Open Space, Irrigated Areas[3,4]	n.a.	2.36
Peaking Factors, Peak Hourly Flow	Multiply Maximum Day Potable by:	Multiply Maximum Day Irrigation by:
Single Family Detached Residential	1.85	3.23
Single Family Attached or Multi-Family Residential	1.85	3.23
Commercial[1]	1.26	3.23
Industrial[2]	1.26	3.23
Hotels	1.26	3.23
Schools	5	3.23
Parks, Open Space, Irrigated Areas[3,4]	n.a.	3.23

Definition of Units:
gpud = gallons per unit per day

gprd = gallons per room per day
gpiad = gallons per irrigated acre per day
gpgad = gallons per gross acre per day
gpsd = gallons per student per day
n.a. = not applicable

Notes:

1. Commercial demand shown should not be applied for high water use applications (e.g. carwashes, laundromats, medical facilities, etc.). Please contact the District for guidance on high water use commercial applications.
2. Industrial demand shown should not be applied for high water use applications (e.g. concrete batch plants, bottling plants, activities that required large volumes of process water, etc.). Please contact the District for guidance on high water use industrial applications.
3. Irrigation rates are based on a 183-day irrigation season.
4. In areas where irrigation-only systems are not planned, total demands shall be developed by combining the potable and irrigation demand components as computed from Table 2.1.

Potable-only and combined water distribution systems shall be sized for the following design conditions:

(1) Peak hourly flow with a minimum system pressure of 40 pounds per square inch (psi) and maximum velocities of 5 feet per second.

(2) Maximum daily flow plus fire demand with a minimum system pressure of 30 psi.

Maximum daily flows for potable-only and combined distribution systems shall be analyzed in conjunction with the fire flow criteria set forth in Section 2.2. Irrigation-only systems will not be utilized for the delivery of fire flows.

Network modeling shall be conducted with EPANET 2.2, WaterCAD/WaterGEMS from Bentley Systems, or InfoWater/InfoWorks WS from Innovyze or an acceptable alternative hydraulic analysis program approved by the District. Friction losses shall be computed using the Hazen-Williams equation with all pipes set to a friction coefficient of C=130. The following model output shall be provided in the design report submitted in accordance with Section 1.4:

1. Schematic of the system layout, preferably color-coded by diameter, identifying all labels (junctions, pipes, reservoirs, etc.).

2. Fire flow report tabulating the residual pressure at each node in the system. Fire flows shall correspond to the highest hazard building represented at each node.

3. Junction reports for the peak hourly design condition and the maximum daily plus fire condition associated with the lowest residual pressure determined during the fire flow analysis. Results shall include, but not

be limited to, junction label, elevation, pressure, and hydraulic grade line (HGL).

4. Pipe reports for the peak hourly design condition and the maximum daily plus fire condition associated with the lowest residual pressure determined during the fire flow analysis. Results shall include, but not be limited to, pipe label, length, diameter, Hazen-Williams C, flow rate, velocity, head loss, and friction slope.

A minimum of two connections shall be made between the proposed distribution system and the District's arterial system. Master-planned pressures along these arterial mains shall be used to establish the network modeling pressures for individual developments where they are planned to connect to the arterial system. These pressures are included in the District's Master Planning documents and can be made available by contacting the District. The pressures shall be represented in the model as "reservoir" elements with water surface elevations set to replicate the master-planned input pressures. Developments with multiple connections to the arterial system at varying ground elevations shall apply the master-planned pressure obtained from the District to the nearest connection, and then translate the HGL established at this point to all remaining arterial system connections. In so doing, a single HGL will be established by which the entire development may be analyzed.

Unless explicitly approved by the District, future connections to adjacent developments may not be assumed to exist for the purposes of the hydraulic analyses. Pressure criteria must be satisfied assuming that the only active connections are those made to District mains already in existence or to mains that will be extended in conjunction with the proposed development.

2.2.2 DISTRIBUTION SYSTEM PRESSURE CONSIDERATIONS

In general, master-planned full build-out pressures throughout the distribution system range from 60 psi to 100 psi, with isolated areas over 100 psi under static conditions. It is the responsibility of the Developer and/or homebuilder to contact the District for the expected full build-out pressures in their particular development, and then based on this information, make their own determination as to whether or not PRVs will be provided on service lines to individual homes. The District assumes no responsibility for any adverse impacts resulting from the decision by a Developer or homebuilder to not provide, or inappropriately set, individual PRVs.

2.2.3 FIRE FLOWS

Fire flows shall be in accordance with the types of structures planned for the development and shall be reviewed and approved by the appropriate fire authority. Minimum fire flows shall be 1,500 gallons per minute (gpm) for single-family and fully sprinklered multi-family dwellings. Fire flows shall be obtained from the

appropriate fire authority and/or from the adopted International Fire Code. All mains conveying water for potable consumption shall be sized to deliver adequate fire protection in accordance with the design criteria established in Section 2.2.1.

2.2.4 SERVICE LINE AND METER SIZING

The following sizing information applies to potable-only service lines and to combined potable-irrigation service lines. Required tap information shall be submitted to the District for review and approval in accordance with Section 1.4.3.

All detached single-family residential dwellings and all multi-family townhouse complexes shall have separate service lines and meters supplying water to each individual home or unit. Likewise, every business, commercial customer, and industry shall have separate service lines and meters, including those situated in multi-unit, strip-mall type configurations. The minimum residential meter size shall be 5/8-inch and the minimum service line size shall be 3/4-inch. The minimum commercial meter size shall be 3/4-inch.

Proposed service lines shall deliver the maximum design flow at acceptable pressures to all fixtures within the building, taking into account friction head loss within the pipe, losses due to valves, meters, and other appurtenances, elevation differences, and any other parameters deemed significant by the Design Engineer. With the exception of a 5/8-inch meter installed on a 3/4-inch service line, the meter size shall match the size of the service line. Under certain conditions, such as excessive friction losses due to the distance between the service connection and the point of application, the District, upon review of the proposed layout, may allow a service line to be constructed one size larger than the meter. It is the obligation of the Design Engineer to submit a proposed plan to the District for review and comment supporting its claim of certain conditions being applicable.

2.3 DISTRIBUTION SYSTEM LAYOUT

2.3.1 GENERAL

The master-planned layout of the potable water distribution system generally requires a combination of 16-inch and 12-inch mains on a half-mile grid throughout the service area. Larger lines along specified corridors will serve as the primary arterials within the system.

Potable water mains shall be located within street rights-of-way whenever possible. Mains shall be constructed a minimum of 5 feet (measured from centerline of pipe) from the lip of any concrete gutter and a minimum of 10 feet (measured edge to edge) from all sanitary sewers, storm sewers, and irrigation water mains, unless otherwise approved by the District. Greater separation may be required for larger mains as determined by the District. Potable water mains

shall generally be constructed on the north and east sides of streets unless otherwise approved on a case by case basis by the District.

Horizontal pipe alignments proposed along curves using DIP where successive push-on joint deflections are intended to generate the curve in lieu of mechanical joint bends, shall be in strict conformance with the manufacturer's deflection recommendations or AWWA M41, whichever is most stringent. Profile designs depicting vertical push-on joint deflections using DIP shall meet these same requirements. No horizontal or vertical push-on joint deflections will be allowed on PVC pipe.

As a result of the above requirements, plans that depict curvilinear pipe alignments or vertical deflections without specifically excluding PVC pipe as a material option shall contain a statement indicating that if PVC pipe is to be used, all deflections shall be made with mechanical joint solid sleeves or bends.

2.3.2 SYSTEM LOOPING AND DEAD-END WATER MAINS

The potable water main network shall be fully looped such that all service lines are supplied from at least two directions, unless otherwise approved by the District in writing. If approval is granted for a particular dead-end main, under no conditions shall the dead-end exceed 400 feet. Where dead-end stub-outs are approved at construction phasing boundaries, no services will be allowed along the stub-outs. Approved dead-ends shall be constructed with one, and only one, permanent or temporary fire hydrant at its end to provide for flushing.

2.3.3 MINIMUM COVER AND MAXIMUM BURY DEPTH

The minimum depth of cover for potable water mains and service lines shall be 4.5 feet over the top of pipe. The maximum bury depth to top of pipe for new installations shall be 6 feet unless otherwise approved by the District in writing. Where grade changes are made to the ground surface over existing potable mains, the minimum cover shall be 4.5 feet and the maximum bury depth 8 feet unless otherwise approved by the District in writing. Where these conditions cannot be met due to changes in grade, the existing facilities shall be relocated at no cost to the District.

2.3.4 VERTICAL CLEARANCE

A minimum vertical clearance of 18 inches shall exist between potable water mains and all crossings with other utilities (storm sewers, sanitary sewers, irrigation water mains, gas mains, etc.) unless otherwise approved by the District. Potable water mains shall be located in steel casing pipe where the main crosses under a storm sewer or other utility that is 30-inches or larger in diameter.

2.3.5 MINIMUM WATER MAIN SIZE

The minimum size for a potable water main shall be 8 inches in diameter. Fire hydrant laterals shall be a minimum size of 6 inches in diameter.

2.3.6 VALVES

Valves shall be located near pipe intersections along all branches of the potable water main network, resulting in 3 valves at a tee and 4 valves at a cross with the following exceptions: (1) Fire hydrant laterals shall require only the valve on the hydrant lateral; (2) Where no service connections exist between two adjacent tees or crosses in a network, and the distance in between is less than 660 feet, one valve may be omitted unless otherwise required by the District. A valve shall be the same nominal size as the water main on which it is installed, and where practical, shall be located directly in line with the nearest perpendicular property line within the right-of-way. Where fire hydrants are located at or near the curb return near an intersection, a valve shall be placed on the non-intersection side of the fire hydrant tee instead of next to the tee/cross in the intersection. Valves shall not be installed between the upper vertical bends on water main lowering.

Where potable water mains extend for distances greater than 660 feet between intersections with branching mains, valves shall be located such that no water main extends a distance greater than 660 feet without a valve.

The Contractor shall be responsible for setting valve boxes relative to rough (existing) grade at the time of installation such that the box can be later raised to final grade without requiring an additional extension. Valve boxes shall not be installed in concrete gutters, cross-pans, alleys, or driveways.

Air release valves shall be constructed at all high points on 12-inch and larger water mains. Air valves may be required at high points on 8-inch water mains where there are no service line connections to the main in the general area of the high point. Air valve locations on 8-inch mains will be reviewed and requested on a case by case basis.

2.3.7 FIRE HYDRANTS

Fire hydrants shall be spaced at a maximum distance of 400 feet within developments and at a maximum distance of 660 feet along arterial roadways where bordering homes front on interior streets within the development and not on the arterial roadway. All fire hydrant locations shall be reviewed and approved by the local fire authority whose signature shall be provided on the approved plans as evidence of fire authority approval. Where practical, fire hydrants shall be located on the north and east sides of streets. Fire hydrants to be operated and maintained by the District shall be located in public rights-of-way or in easements dedicated to the District.

The maximum length for a 6-inch fire hydrant lateral shall be 90 feet and all laterals shall be ductile iron pipe. No vertical or horizontal bends will be allowed on hydrant laterals for new or replacement/redevelopment installations unless otherwise approved by the District in writing. The maximum bury depth for a fire hydrant as measured from the bottom of the hydrant shoe to the hydrant flange shall be 6.5 feet unless otherwise approved by the District. Where the maximum bury depth is exceeded in either a new installation or due to grade changes in the vicinity of an existing hydrant, the Design Engineer shall provide a plan and profile of the proposed depth of cover for review and consideration by the District.

2.3.8 WATER QUALITY SAMPLING STATIONS

Water Quality sampling stations shall be installed within developments to monitor water quality within the water system. Sampling stations shall be installed at locations and frequencies as selected by the District. Locations will be selected by the District and when practical will be located in low traffic areas within parks, retention ponds, open space, tree lawns or common use areas. Sampling stations shall be located along roadways in the roadway right-of-way or in an easement dedicated to the District and set back 5 feet from the curb or road edge whenever possible.

2.3.9 FIXED METER READING EQUIPMENT

Fixed meter reading equipment shall be installed within developments to collect water system meter readings as determined by the District. Fixed meter reader equipment shall be installed at locations and frequencies as selected by the District that best maximize meter reading collections. Locations will be selected by the District.

2.4 SINGLE-FAMILY RESIDENTIAL SERVICE LINE LAYOUT

2.4.1 HORIZONTAL LAYOUT

The items listed below identify the general design criteria associated with the horizontal layout of potable water service lines. Service lines shall be installed in accordance with the District's Standard Details and shall not be connected to fire hydrant laterals.

- When located in tree lawns, meter pits shall be centered between the back-of-curb and front edge of sidewalk, and a minimum of 24 inches from the center of the meter pit to the edge of the driveway or other hardscaped surfaces.

- Meter pits shall be located 3 feet from back-of-sidewalk to meter pit center where attached walks exist, and a minimum of 24 inches from the center of the meter pit to the edge of the driveway or other hardscaped surfaces.

- A minimum horizontal separation of 10 feet shall be maintained between potable water service lines and irrigation service lines from the mains to a distance no more than 5 feet from the structure or dwelling being served.

- A minimum horizontal separation of 10 feet shall be maintained between potable water service lines and sanitary sewer service lines.

- Potable service lines shall generally be located three feet inside the property line, except where a fire hydrant is located at the property line, in which case the service shall be located five feet inside the property line.

2.4.2 VERTICAL LAYOUT

The minimum cover for potable water service lines shall be 4.5 feet over the top of the line. The maximum cover for potable water service lines shall be 6.0 feet over the top of the line. Potable water service lines shall cross over irrigation mains with a minimum vertical clearance of 18 inches.

2.5 SERVICE LINE LAYOUTS FOR NON SINGLE-FAMILY RESIDENTIAL LOTS

Horizontal separations and vertical clearances established for SFR service lines shall also apply to non-SFR service lines. Likewise, meter facilities shall be located relative to sidewalks in the same manner as described for SFR services whenever practical. Alternate locations for these facilities shall be reviewed and approved by the District on a case-by-case basis.

SECTION 3 – DESIGN REQUIREMENTS FOR WASTEWATER COLLECTION FACILITIES

3.1 GENERAL

All wastewater collection facilities shall conform to the District's Rules and Regulations and Design and Construction Standards. The District retains the right to adopt additional requirements and modify existing requirements as necessary for a particular project.

3.2 DESIGN FLOW

Wastewater collection facilities shall be sized to meet the requirements of projected peak wastewater flows. Wastewater flows shall be calculated based on full development of the area or basin to be served by the proposed facilities. No roof drains, foundation drains, surface drainage, or any other source of surface stormwater runoff or groundwater may be discharged to a sanitary sewer. Network modeling shall be conducted using a spreadsheet or similar approach such that an average daily flow for each pipe is developed. These average daily flows should then be used to determine the peaking factor and peak flow for each individual pipe in the system. The wastewater flow parameters in Table 3.1 shall be used to determine the minimum sewer capacity required:

TABLE 3.1

WASTEWATER FLOW DESIGN PARAMETERS

Design Values			
Flow			
ADF	Single Family Detached Residential (gpud)		200
ADF	Single Family Attached or Multi-Family Residential (gpud)	140	
ADF	Commercial/Industrial/Institutional (gpgad)	500	
ADF	Hotel Contributions (gpd/room)		140
ADF	Schools (gpsd)		15

Notes:

1. Commercial loading shown should not be applied for high water use applications (e.g. carwashes, laundromats, medical facilities, etc.). Please contact the District for guidance on high water use commercial applications.
2. Industrial loading shown should not be applied for high water use applications (e.g. concrete batch plants, bottling plant, activities that

required large volumes of process water, etc.). Please contact the District for guidance on high water use industrial applications.
ADF = Average Daily Flow (gpd) gpd = gallons per day gpud = gallons per unit per day gpgad = gallons per gross acre per day gpsd = gallons per student per day Peaking Factor = 3.53 (ADF/1,000,000) $^{-0.168}$ Peak Flow = ADF x Peaking Factor Maximum Peaking Factor = 5.0 Flow values include an allowance for infiltration and inflow. Flows from known industrial contributions shall be determined on a case by case basis.

3.3 DESIGN VELOCITY

Sanitary sewers shall be designed to provide a minimum velocity of 2 feet per second at design peak flow. The maximum velocity should not exceed 10 feet per second. If the maximum velocity in any section of sewer correctly sized for ultimate development will be less than 2 feet per second during the initial years of operation and a reduction in pipe size would result in a pipe too small for future requirements, the pipe size will be selected based on the future requirements.

3.4 PIPE SIZES

Sanitary sewers shall be designed to adequately serve the area tributary to it when that area is fully developed. The minimum allowable size for a sanitary sewer shall be 8-inch in diameter. The minimum allowable size for an individual service connection shall be 4-inch in diameter. All sanitary sewers shall be sized to convey projected peak flow rates while flowing no more than 60 percent full. All changes in pipe size must be made at a manhole.

A Manning's roughness coefficient of 0.011 shall be used with PVC gravity sewer pipe material when determining the velocity of flow in the pipe. A Manning's roughness coefficient of 0.013 shall be used with all other sewer pipe materials.

3.5 SLOPE

Sanitary sewers shall be constructed with uniform slopes between manholes. Changes in slope and direction will occur only at manholes. Minimum and maximum slopes shall be as follows:

Pipe Size (in)	Minimum Slope (ft/ft)	Maximum Slope* (ft/ft)
4 (service lines only)	0.0208	-

6 (service lines only)	0.0104	-
8	0.0040	0.060
10	0.0025	0.045
12	0.0020	0.035
15	0.0020	0.026
18	0.0020	0.020
21	0.0020	0.017
24	0.0020	0.014
*Higher maximum slope values may be acceptable, as long as the maximum flow velocity in the pipe does not exceed 10 feet per second or special provisions are made to protect against pipe displacement.		

3.6 SERVICE LINES

All detached single-family residential dwellings and each unit in multi-family townhouse complexes shall be served by separate, independent and unextended sewer services unless specific approval has been otherwise granted by the District in writing. Likewise, unless otherwise approved in writing, every business, commercial customer, and industry shall have separate, independent and unextended sewer services, including those situated in multi-unit, strip-mall type configurations. Service line sizes and flow rates shall be determined by the Developer's Engineer and shall be submitted to the District for review and approval in accordance with Section 1.4.3. All sewer services shall have backwater valves installed on the service line in order to prevent sewage backups into the building.

Service lines shall be a minimum size of 4 inches installed at a minimum slope of 1/4 inch per foot. Where multiple 4 inch service lines connect to a single service, a minimum 6 inch service line must be constructed. All connections of service lines to sanitary sewers shall be located in public street rights-of-way or within permanent easements granted to the District. Sewer service lines shall be located at the center of each lot between the property lot lines on the lot side fronting the sewer main. Sewer services may be constructed underneath driveways. The Contractor shall provide the District with an accurate location of each completed service line connection by referencing the station distances from the connection to both the upstream and downstream sanitary sewer manholes. If a lot is located on a corner with sewer mains located in more than one adjacent street, the street with the sewer main from which the sewer service connection is tapped from shall be clearly identified on the plans.

Plastic (PVC) pipe materials are required and must be in accordance with or compatible with the materials specified in these Design and Construction Standards. Service line connections to sewers shall be made using a fabricated wye or tee type connection fitting or double strapped saddle. The method of joining the service line to the main must be approved by the District in advance. In case a wye or tee cannot be used to make a tie in, mechanical methods shall be used

to tap the main line. Service line connections to sewers must be located a minimum distance of 10 feet away from a manhole.

All installations of service lines from the sanitary sewer to the building shall be inspected by the District, which shall be notified 48 hours or 2 working days before starting the installation. No service line connections shall be allowed prior to the acceptance of the completed sanitary sewer by the District.

3.7 DEPTH

Sanitary sewers shall be deep enough to collect sewage from basements by gravity flow and shall have a minimum cover of 4 feet. Sanitary sewers shall not be deeper than 20 feet, unless specifically approved by the District.

Where sanitary sewers are deeper than 20 feet, SDR 26 PVC sanitary sewer pipe shall be used.

3.8 LOCATION OF SANITARY SEWERS AND APPURTENANCES

Sanitary sewers and appurtenances shall be constructed within public right-of-way whenever possible, and to the maximum practical extent, located in the center of the street. Under no conditions, however, shall the centers of sanitary sewer manholes be located closer than 13 feet from the curb flow line unless otherwise approved by the District in writing.

In areas where sewer mains cannot be located in public rights-of-way, they may be located within easements subject to the approval of the District. All sewer easements shall be a minimum of 30 feet in width and must be accompanied by the District's Standard "Easement and Right-of-Way Agreement." Where the easement is contiguous to a public right-of-way, the minimum easement width may be 20 feet. Easements shall be accurately shown on the plans and all pipelines and appurtenances shall be located a minimum of 5 feet inside the easement or right-of-way lines.

Sanitary sewers shall be located a minimum of 10 feet horizontally from existing or proposed potable water mains (measured edge to edge), and a minimum of 5 feet horizontally from existing or proposed irrigation water mains or storm sewers (measured centerline to centerline). Greater separation may be required for larger mains as determined by the District. Where sanitary sewers cross potable water mains, the sewer shall be a minimum of 18 inches vertical clear distance above or below the potable water main. Where sewer mains cross irrigation water mains and storm sewers, the sewer shall be a minimum of 12 inches vertical clear distance above or below the irrigation main or storm sewer. Where these minimum vertical clearances cannot be maintained to water lines, the sewer shall be constructed in accordance with the District's Standard Details as follows:

- One full length of pipe at least 14 feet long shall be centered over the water main.

- Where a sanitary sewer is crossing under a water line, the sanitary sewer shall be backfilled with flash fill or ASTM D-448/AASHTO M43, gradation size 67 crushed granite from the top of the sewer pipe bedding to the centerline of the water line.

Structural protection shall be provided where necessary in accordance with the District's Standard Details, and suitable bedding and backfill procedures shall be used to prevent settling of the crossing pipes.

3.9 ALIGNMENT

Sanitary sewers shall be installed with a straight alignment between manholes. Changes in direction and slope will occur only at manholes.

3.10 TERMINATION

All sanitary sewers shall begin and end at a manhole. Where a sewer may be extended in the future, the terminal manhole shall have a 4 foot long (minimum) plugged stub out installed in the direction of the future extension using either a push plug or cap. Stub outs shall be plugged with an approved device at the terminal manhole and at the end of a 4 foot extension. Sanitary sewers must extend to the farthest edge of the property or platted subdivision to be served, and must terminate in public right-of-way or permanent easements granted to the District.

3.11 MANHOLES

Manholes shall be provided at all changes in slope, pipe size, alignment, and at each junction of intersecting sewers. Maximum spacing between manholes shall not exceed 400 feet for sewer diameters of 15-inch and smaller. Maximum spacing of manholes shall not exceed 500 feet for sewers greater than 15-inch. For sewers 24-inches and smaller, manholes shall have an inside diameter of 4 feet. For mains larger than 24-inch, manholes shall have an inside diameter of 5 feet.

All manholes shall be designed and constructed with a minimum drop through the manholes as follows:

- 0.1 foot for straight through sewers.

- 0.2 foot at a change in sewer alignment or intersection of connecting sewers.

When the downstream pipe leaving a manhole is a larger diameter than the upstream pipe entering the manhole, the crown elevation of both pipes shall match.

All manholes shall be located in public street rights-of-way or within permanent easements granted to the District. All manholes shall be accessible by maintenance vehicles via all-weather drives. Where manholes are not located in paved streets, a gravel paved roadway surface shall be installed over the sanitary sewer for access to each manhole. Gravel surfacing shall be CDOT Class 6 road base material a minimum of 4 inches thick and 15 feet wide, compacted to 95% of the maximum density at optimum moisture as determined by AASHTO T99 (Standard Proctor) using a steel smooth drum roller. All manholes that are not located within paved streets shall have lockable lids in accordance with the Approved Construction Materials List.

Manholes shall be located outside areas subject to flooding. When flood prone locations cannot be avoided, the District, at its sole discretion, may allow the installation of manholes designed to prevent the entry of surface runoff.

3.12 SAMPLING MANHOLES

Sampling manholes shall be located as directed by the District and constructed in accordance with the District's Standard Details. The inside diameter shall be a minimum of 4 feet and flow shall be directed through the manhole in a straight alignment at a drop of 0.1 feet. Sampling manholes shall not be used to change alignment or to connect multiple sewers. On new installations, uninhibited access to the flow through the sampling manhole shall be provided from inside wall to inside wall by constructing a cast-in-place concrete bench equal in height to the diameter of the incoming service. When sampling manholes are installed on existing service lines, access shall be provided by constructing the full diameter bench and subsequently removing the top half of the pipe within the manhole.

3.13 WASTEWATER LIFT STATIONS

All wastewater collection systems shall be planned and designed to flow to existing District sanitary sewers by gravity flow. The District prohibits the construction of new wastewater lift stations. If there is no possible way in which gravity flow service can be provided for a development, the District will consider approval of newly constructed lift stations provided the following requirements are met:

- The facility design will be submitted to the Adams County Water Quality Association and to CDPHE, following their Regulation 22 requirements, for approval. The Adams County Water Quality Control Association is currently the area's 208 agency for wastewater constructs such as lift stations. If the project is accepted, by the association, the Adams County Water Quality Association will

notify the Colorado Department of Public Health and Environment of their approval.

- The District will determine whether it will take ownership of the facility or whether another entity separate from the District will have ownership, maintenance, and funding responsibility for the facility. If a separate entity is selected, it shall be subject to covenants and other standards deemed by the District to be sufficient to reasonably provide for the long-term ownership, operation, maintenance, repair and replacement of the facility within the District's system. The facility will be constructed on a fenced parcel of land that is dedicated to the District. Access to the site shall be provided by a paved public street.

- The facility will be equipped with a minimum of two aboveground, self-priming wastewater pumps. Each pump will be sized to pump the peak design flow of the lift station. Pumps manufactured by Gorman-Rupp are preferred. Acceptance of alternate pump manufacturers will be at the sole discretion of the District.

- The facility will be served with primary power from a local power supplier.

- The facility will be equipped with stand-by power provided by a natural gas generator with an automatic transfer switch. If a natural gas generator cannot be utilized, a propane or diesel generator shall be provided with approval by the District.

- The facility will be equipped with controls and alarm systems as required by the District.

Per the District's Rules and Regulations, the District reserves the right to be responsible for the design of wastewater collection facilities included as planned system facilities, or any others identified during the plan review process. When this right is exercised, the Applicant for wastewater service will be responsible for the cost of the engineering including permitting, design, bidding, construction administration and inspection, and the construction cost for the installation of the wastewater facilities, including wastewater lift stations.

3.14 GREASE AND SAND/OIL INTERCEPTORS

General Prohibitions: A commercial/industrial user may not introduce into a Publicly Owned Treatment Works (POTW) any pollutant(s) which will cause pass through or interference. General and specific prohibitions may be found in the

District's Rules and Regulations as provided in "Article III Limitations on Discharge".

Construction modifications may be required to limit the discharge of harmful wastes into the District's facilities:

- Policy: Property owners may be required to install a grease interceptor/trap and/or a sand/oil interceptor/trap on a waste line in order to protect the District's wastewater facilities from the introduction of excessive quantities of grease, sand and/or oil. A determination by the District that a grease interceptor/trap and/or sand/oil interceptor/trap is required to be installed on the waste line in order to protect the District's wastewater facilities from the introduction of grease, sand and/or oil shall be final and conclusive.

- Properties/Facilities Requiring Grease Interceptor or Trap: Where the District determines that a property owner is required to install a grease interceptor or trap, a District-approved grease interceptor/ trap shall be installed on the waste line leading from sinks, drains and all other fixtures or equipment in food preparation establishments such as (but not limited to) restaurants, cafes, lunch counters, cafeterias, bars and clubs, hotels, hospitals, factory kitchens, school kitchens, church kitchens, or other establishments where grease may be introduced into the District's facilities.

- Properties/Facilities Requiring Sand/Oil Interceptor: Where the District determines that a property owner is required to install a sand/oil interceptor, a District-approved sand/oil interceptor shall be installed on the waste line for all parking and repair garages, filling stations, car washes, truck terminals with washout facilities, engine steam cleaning facilities, commercial laundries, and any other commercial or industrial establishment that have racks or oil producing waste products. These establishments shall also have facilities to prevent storm or surface water from entering the waste line.

- District Approval: All grease interceptors/traps and sand/oil interceptors/traps shall meet specific requirements established by the District, and the installation of all grease sand/oil interceptors/traps shall be subject to inspection and approval by the District. Additionally, all interceptors and traps must be approved by the District prior to installation. The District shall charge an inspection fee, as indicated in Section 7 of Appendix A to the Rules and Regulations, for the inspection and approval of all grease and sand/oil interceptor/trap installations. The District will supply the property owner with acceptable examples of interceptors and traps

that meet District specification. Standards details for interceptors can be found in Section 6 of this document.

- Requirement of Plan Review: If any water or wastewater is discharged, or is proposed to be discharged, to the District's facilities from restaurants or other food preparation establishments described above, or that may contain the substances or exceed the limitations described in Article III of the Rules and Regulations, it shall be the responsibility of the users and owner of the property, business or industry or an authorized representative to contact the Manager of the District's Industrial Pretreatment Program for the purpose of plan review. The plan review shall determine the need, method, and size of pretreatment facilities required to pretreat or otherwise control the wastewater to make it acceptable for discharge in the District's facilities. Proposed pretreatment devices must meet the District's technical specifications and design criteria provided in Article III Section 3.2, of the Rules and Regulations.

Submission of Plans: Upon completion of the plan review, all applicants shall submit a set of complete plans for the pretreatment facilities and details of the proposed installation, including computation relative to sizing. Applicants shall retain a duplicate set of such records for the life the pretreatment facility. The records shall remain with the property through changes of ownership or tenancy.

SECTION 4 – DESIGN REQUIREMENTS FOR IRRIGATION WATER FACILITIES

4.1 GENERAL

All irrigation water distribution facilities shall conform to the District's Rules and Regulations and Design and Construction Standards. The District retains the right to adopt additional requirements and modify existing requirements as necessary for a particular project.

As required by resolution of the District Board, new developments in certain areas of the District's service area shall be constructed with a dual water supply system. The general boundary limits of the dual water supply system are established in the District's Master Plan. One distribution system shall supply potable water, and a separate distribution system shall supply irrigation water. This section establishes the planning and design requirements associated with the irrigation system. If any portion of this section conflicts with future regulations promulgated by the State of Colorado through the Colorado Department of Public Health and Environment, Water Quality Control Division, State regulations shall take precedence over these standards.

Upon request from developers or prospective customers, the District will consider making irrigation water available for other non-potable water uses for which the irrigation supply would be considered appropriate. Specific authorization from the District is required to utilize the irrigation supply for any purpose other than landscape irrigation. In all cases, public safety shall be the principal consideration.

4.2 DESCRIPTION OF THE IRRIGATION DISTRIBUTION SYSTEM

4.2.1 DISTRIBUTION SYSTEMS WITHIN DEVELOPMENTS

Where planned, irrigation water distribution systems shall be constructed throughout the development to deliver non-potable water to each individual lot or parcel, and to each park, open space, school, streetscape, and any other parcel planned to contain irrigable land.

The irrigation distribution system shall consist of distribution mains, isolation valves, blow-off facilities, sampling stations, service lines, and meters to serve the irrigated portions of every parcel or tract within the development. Except for master-planned arterial facilities, the irrigation system shall be designed and constructed by the Developer.

4.2.2 ARTERIAL DISTRIBUTION SYSTEM

The master-planned arterial irrigation water distribution system shall be designed and constructed by the District. In the event that a Developer is directed by the District to construct a portion of a master-planned arterial irrigation main in conjunction with a development, the Developer may be reimbursed for the costs of the arterial main when a written reimbursement agreement is executed prior to construction. Where an arterial main is utilized by a development for looping and/or distribution for its network, only costs to upsize the line to the master planned line size may be reimbursed. The arterial system will consist of wells, well pumps, storage reservoirs, pump stations, transmission mains, principal distribution mains, and the appurtenances necessary to convey irrigation water from the District's alluvial well sites to the areas within the District planned for irrigation service.

4.2.3 IDENTIFICATION OF FACILITIES

All irrigation system components associated with mains and service lines shall be distinctly marked as specified in Section 5, making them easily distinguishable from the elements utilized in the potable water system. Examples include: (1) Covers on meter pits, triangular valve boxes, curb stop boxes, manholes, vaults, etc., shall have the word "IRRIGATION" or an acceptable abbreviation cast on the cover; (2) PVC pipe shall be manufactured in a purple color and shall be embossed or integrally stamped with a statement that clearly indicates the pipe does not contain potable water; (3) All ductile iron pipe and fittings shall be encased in purple polyethylene wrap and be taped continuously along the top of the pipe with purple warning tape that clearly and continuously indicates the pipe does not contain potable water.

All sprinkler systems in the dual water system area shall be constructed with purple sprinkler heads and valve boxes indicating that the supplied water is of non-potable quality. If in the future, this requirement is found to be in conflict with requirements promulgated by Commerce City or Adams County, the City's or County's requirements shall govern those systems owned and operated by the City or County.

Pipe, valve box covers, meter pit covers and other facilities bearing the color, shapes, and markings of materials specifically designated for use in the irrigation system, shall not be used in the construction of potable water facilities.

4.2.4 SERVICE

The District will supply irrigation water to each parcel and tract through a separate irrigation service line and meter similar to the potable system. No aboveground fixtures or outlets to which hoses could be connected shall be permitted. Water supplied through the irrigation meter shall be used only for irrigation purposes and

shall not be connected to any potable water supply, to any facility on the property, or conveyed into any building. Irrigation water in dual system areas shall be supplied by the irrigation system, not the potable system.

Each service line connection to the irrigation distribution system shall be equipped with a backflow prevention device in accordance with the District's Rules and Regulations, Article V that will prevent water from entering the distribution system through the property owner's sprinkler system.

Upon completion of facilities by the Developer and acceptance of the irrigation distribution system, the District shall be responsible for the operation and maintenance of the irrigation system up to and including the water meter. Property owners shall be responsible for draining the service lines, backflow preventer and sprinkler systems to prevent damage due to freezing. Any irrigation system appurtenance on the discharge side of the water meter pit is the property and responsibility of the property owner.

4.2.5 SOURCE OF SUPPLY

The irrigation distribution system will be supplied with non-potable water for irrigation purposes. This means that the water is intended only for irrigation, has not been treated to potable water standards, and should not be used for human consumption.

The irrigation system is supplied with groundwater that is not treated to potable water standards. The groundwater is supplied by a system of wells located throughout the District where appropriate supplies of groundwater are available. Each proposed development that requests water service from the District shall be evaluated to determine whether or not adequate non-potable groundwater is available to provide service within the development.

Well sites may be within platted areas of developments. In these cases, the Developer will be required to dedicate to the District a tract of land for the well(s) and easements for associated irrigation water lines. Additionally, the irrigation distribution system shall be designed and constructed to accommodate the well(s) design flow rate and operating pressure, as determined by the District, between the well and the irrigation arterial system. Well sites shall have suitable access and space to facilitate well construction, rehabilitation, and pump installation and replacement.

4.3 SYSTEM DESIGN

4.3.1 CONNECTION TO THE ARTERIAL SYSTEM

The District's arterial (master-planned) irrigation system will develop over time. The gradual expansion of the system will create a condition for some time in which

certain developments, as a result of their geographic locations, will connect directly to completed portions of the arterial irrigation system, while others will be directed to temporarily connect to the arterial potable system. The latter condition will result in the delivery of potable water through both the potable and irrigation distribution systems constructed by the Developer until the temporary connections are converted over by the District to an active arterial irrigation main. Temporary connections to the potable arterial system shall be in accordance with the District's Standard Details, and may require the installation of additional valves and/or fittings as directed by the District.

Each proposed irrigation distribution system shall be connected to the District's arterial potable or irrigation mains at a minimum of two locations. The connections shall be reviewed and approved by the District in accordance with the following parameters: (1) Connections shall be made to existing arterial irrigation lines if such lines exist adjacent to any side of the development; (2) Connections to a potable main along one side of a development and an irrigation main along another side will be strictly prohibited; (3) Temporary connections to a potable main shall be made only in streets master-planned for future arterial irrigation mains unless otherwise agreed to by the District; (4) If a development is bordered on more than one side by master-planned irrigation arterial mains that have yet to be constructed, the District will determine where the temporary connections shall be made.

Due to the high pumping pressures required at irrigation supply wells in certain areas of the District, developments may find it necessary to install pressure reducing valves (PRVs) at arterial system connection points in order to deliver flows into the development at acceptable pressures. PRVs and any associated appurtenances shall be designed and constructed by the Developer at no cost to the District.

4.3.2 IRRIGATION DISTRIBUTION SYSTEM DESIGN CRITERIA

This section provides information regarding the development of irrigation demands and the requirements related to the hydraulic modeling of the demands through the proposed system. Additional design criteria pertinent to the final configuration of the proposed system, such as looping, dead-ends, and minimum line size, are presented in Section 4.4.

All irrigation demands associated with full build-out of the development shall be accounted for in the hydraulic analyses used to size the distribution mains, and shall be appropriately allocated throughout the network in relation to where the demands will occur. Demands shall include the irrigated portions of all residential, commercial, and industrial properties, and shall include the irrigation of parks, open space, streetscapes, and miscellaneous common areas located both inside and adjacent to the development. Furthermore, these demands shall include the

irrigation of all tracts and parcels to be owned and maintained by either Commerce City, a homeowner's association, or other similar entity.

Irrigation-only distribution systems will not be utilized for the delivery of fire flows and shall be sized for the following design condition:

> Peak hourly flow with a minimum system pressure of 50 psi and maximum velocities of 5 feet per second.

Network modeling shall be conducted with EPANET 2.2, WaterCAD/WaterGEMS from Bentley Systems, InfoWater/InfoWorks WS from Innovyze or an acceptable alternative hydraulic analysis program approved by the District. Friction losses shall be computed using the Hazen-Williams equation with all pipes set to a friction coefficient of C=130. The following model output shall be provided in the design report submitted in accordance with Section 1.4:

1. Schematic of the system layout, color-coded by diameter, identifying all labels (junctions, pipes, reservoirs, etc.).

2. Junction reports for the peak hourly design condition. Results shall include, but not be limited to, junction label, elevation, pressure, and hydraulic grade line (HGL).

3. Pipe reports for the peak hourly design condition. Results shall include, but not be limited to, pipe label, length, diameter, Hazen-Williams C, flow rate, velocity, headloss, and friction slope.

Master-planned pressures along arterial irrigation mains shall be used to establish the network modeling pressures for individual developments where connections to the arterial system are proposed. These pressures are included in the District's Master Planning documents and can be made available by contacting the District. The pressures shall be represented in the model as "reservoir" elements with water surface elevations set to replicate the master-planned input pressures. Developments with multiple connections to the arterial system at varying ground elevations shall apply the master-planned pressure obtained from the District to the nearest connection, and then translate the HGL established at this point to all remaining arterial system connections. In so doing, a single HGL will be established by which the entire development may be analyzed.

Unless explicitly approved by the District, interconnections between irrigation distribution systems in adjacent developments are not permitted. The District anticipates converting temporary irrigation connections over to permanent connections one development at a time as the irrigation system expands, creating the potential for cross-connections if multiple developments have been interconnected. Consequently, the stated design condition must be satisfied

assuming that irrigation water is supplied directly from the District's arterial mains, and not through adjacent developments.

4.3.3 IRRIGATION DISTRIBUTION SYSTEM PRESSURE CONSIDERATIONS

In general, full build-out pressures throughout the irrigation distribution system will range from 60 psi to 100 psi, with isolated areas over 100 psi under static conditions. Consequently, the Developer is cautioned not to assume irrigation distribution pressures will be high enough to adequately provide for larger-scale sprinkler systems. It is the responsibility of the Developer and homebuilder to contact the District for the expected full build-out pressures in their particular development, and then based on this information, make their own determination as to whether or not service line pressures should be boosted or reduced to accommodate the irrigation needs within the development. The District is not responsible for any adverse impacts resulting from the decision by a Developer or homebuilder to boost or reduce the pressures available from the irrigation distribution system.

The Developer is further cautioned that full build-out irrigation system pressures obtained from the District may or may not be valid for current conditions, and could vary over time due to the following factors: (1) the construction sequence for arterial potable system components may impact those developments temporarily connected to the potable system; (2) the construction sequence for arterial irrigation system components may impact those developments permanently connected to the irrigation system; (3) the conversion of developments from temporary irrigation connections over to permanent connections may impact pressures throughout both systems.

4.3.4 IRRIGATION SERVICE LINE AND METER SIZING

The following sizing information applies to irrigation-only service lines. Required tap information shall be submitted to the District for review and approval in accordance with Section 1.4.3.

Sprinkler systems for detached single-family residential lots shall not be designed for flow rates greater than 10 gpm or meters larger than 5/8-inch unless the District grants specific permission for a larger capacity system. Irrigation service lines serving areas other than detached single-family residential lots shall be designed for a maximum daily application rate corresponding to 0.3 inches of water applied for a duration of no less than 6 hours in a 24-hour period, which equates to 23 gpm per irrigated acre (peaking factor of 24 hrs/6 hrs = 4). District approval shall be required for any irrigation service designed to deliver flows at greater peaking factors.

4.4 DISTRIBUTION SYSTEM LAYOUT

4.4.1 GENERAL

Each proposed distribution system shall be sized to accommodate the full build-out irrigation needs of the development in accordance with District criteria. Irrigation mains shall be constructed in locations that will maintain a minimum centerline-to-centerline horizontal separation of 10 feet to parallel potable water lines (measured edge to edge), and 5 feet of separation to parallel sanitary sewers and storm sewers (measured centerline to centerline). Greater separation may be required for larger mains as determined by the District. Mains shall be installed a minimum distance of 5 feet from the edge of any concrete gutter and shall conform to the same easement and right-of-way requirements as the potable system.

4.4.2 SYSTEM LOOPING AND DEAD-END IRRIGATION MAINS

The irrigation water main network shall be fully looped throughout residential developments in the same manner as the potable network, with the intent to supply all service lines from at least two directions. There are some exceptions in which dead-ends may be allowed at the discretion of the District for the provision of irrigation water to the following: open space areas, parks, school grounds, landscaped commercial and industrial areas, landscaped multi-family areas, and small-scale residential developments that do not have an interconnected street layout conducive to a looped system. Each situation of this type will be reviewed and approved by the District on a case-by-case basis.

Standard irrigation blow-off assemblies shall be installed at the ends of all approved dead-end irrigation mains and at periodic locations as required by the District to provide for flushing the system. Sampling stations may also be required to be installed by the Developer at periodic locations throughout a development as determined by the District. Specialized flushing hydrants may be required in place of blow-offs or on a master-planned arterial irrigation main in the event that a Developer is directed by the District to construct one of these lines (flushing hydrants are not fire hydrants).

4.4.3 MINIMUM COVER AND MAXIMUM BURY DEPTH

The minimum depth of cover for irrigation mains shall be 5.5 feet over the top of the pipe. The maximum bury depth to top of pipe for new installations shall be 7 feet unless otherwise approved by the District. Where grade changes are made to the ground surface over existing irrigation mains, the minimum depth of cover shall be 5.5 feet and the maximum bury depth 9 feet unless otherwise approved by the District. Where these conditions cannot be met due to changes in grade, the existing facilities shall be relocated at no cost to the District.

4.4.4 VERTICAL CLEARANCE

In areas where irrigation mains cross potable water mains, the irrigation mains shall be installed below the potable water mains at a minimum vertical clearance between utilities of 18 inches. In areas where irrigation mains cross sanitary sewers, storm sewers, gas mains or other utilities, a minimum vertical clearance of 12 inches shall be maintained between crossing utilities. Irrigation water mains shall be located in steel casing pipe where the main crosses under a storm sewer or other utility that is 30-inches or larger in diameter.

4.4.5 MINIMUM MAIN SIZE

The minimum irrigation main size shall be 4 inches in diameter.

4.4.6 VALVES

Within residential developments, irrigation system valves shall be located in the same manner as the potable system. Valves shall be located near pipe intersections along all branches of the irrigation network, resulting in 3 valves at a tee and 4 valves at a cross with the following exception: where no service connections exist between two adjacent tees or crosses in a network, and the distance between is less than 660 feet, one valve may be omitted unless otherwise required by the District. A valve shall be the same nominal size as the water main on which it is installed, and where practical, shall be located directly in line with the nearest perpendicular property line within the right-of-way. Valves shall not be installed between the upper vertical bends on irrigation water main lowering.

Where irrigation water mains extend for distances greater than 660 feet between intersections with branching mains, valves shall be located such that no water main extends a distance greater than 660 feet without a valve.

The Contractor shall be responsible for setting valve boxes relative to rough (existing) grade at the time of installation such that the box can be later raised to final grade without requiring an additional extension. Valve boxes shall not be installed in concrete gutters, cross-pans, alleys, or driveways.

Air release valves shall be constructed at all high points on 12-inch and larger irrigation water mains and in accordance with AWWA M51.

4.4.7 FIRE HYDRANTS

Fire hydrants are not allowed on the irrigation system for any reason.

4.4.8 FLUSHING HYDRANTS

In the event that a Developer is directed by the District to construct a portion of a master-planned arterial irrigation main in conjunction with a development, the

District may direct the Developer to also install a flushing hydrant and the Developer may be reimbursed for the costs of the hydrant assembly.

4.5 SINGLE-FAMILY RESIDENTIAL IRRIGATION SERVICE LINE LAYOUT

4.5.1 HORIZONTAL LAYOUT

The items listed below identify general design criteria associated with the horizontal layout of irrigation service lines for single-family residential applications. Irrigation service lines shall be installed in accordance with the District's Standard Details and shall, under no conditions, enter the structure or dwelling being served. Meter pits shall be located in landscaped areas unless otherwise approved by the District. Design features necessary to allow residents to winterize the irrigation system between the stop-and-waste valve and home. The responsibility shall be the responsibility of the property owner.

- Stop-and-Waste Valve Boxes shall be located 12 inches behind meter pits where sidewalk is attached to the curb. Valve key extensions shall be furnished in each valve box in conformance with the District’s Standard Details.

- Stop-and-Waste Valve Boxes shall be located 6 to 12 inches behind the sidewalk where detached from the curb. Valve key extensions shall be furnished in each valve box in conformance with the District’s Standard Details.

- When located in tree lawns, meter pits shall be centered between the back-of-curb and front edge of sidewalk.

- Meter pits shall be located 3 feet from back-of-sidewalk to meter pit center where attached sidewalks is connected to the curb.

- A minimum horizontal separation of 10 feet shall be maintained between irrigation service lines and potable water service lines from the mains to a distance no more than 5 feet from the structure or dwelling being served.

- A minimum horizontal separation of 5 feet shall be maintained between irrigation service lines and sanitary sewer service lines to a distance no more than 5 feet from the structure or dwelling being served.

- Irrigation service lines shall generally be located three feet inside the property line.

4.5.2 VERTICAL LAYOUT

The minimum cover for irrigation service lines shall be 4.5 feet over the top of the line. Irrigation service lines shall cross under potable water mains with a minimum vertical clearance of 18 inches.

4.6 IRRIGATION SERVICE LINE LAYOUTS FOR NON SINGLE-FAMILY RESIDENTIAL LOTS

Horizontal separations and vertical clearances established for SFR irrigation service lines shall also apply to non-SFR service lines. Where practical, meter facilities shall be located relative to sidewalks in the same manner as described for SFR services. Meter pits shall be located in landscaped areas. Alternate locations for these facilities shall be reviewed and approved by the District on a case-by-case basis. It shall be the responsibility of the Developer to install stop and waste valve. This design feature is necessary to allow residents to winterize the irrigation system between the stop-and-waste valve and structure. The responsibility shall be the responsibility of the property owner.

SECTION 5 – GENERAL SPECIFICATIONS AND TECHNICALPROVISIONS FOR CONSTRUCTION OF UNDERGROUND WATER, IRRIGATION, AND WASTEWATER FACILITIES

5.1 SCOPE

This specification establishes District criteria for the furnishing of all labor, equipment, materials, and the performance of all operations in connection with the construction, inspection, and testing of water and irrigation mains, sanitary sewers, service lines, and all associated appurtenances within the District's service area in strict accordance with the District's Design and Construction Standards.

Prior to commencing construction, the Contractor shall familiarize himself with all construction related aspects of the District's Rules and Regulations and Design and Construction Standards.

5.2 STANDARD SPECIFICATIONS

Wherever reference is made to standard specifications, i.e. ASTM, AWWA, etc., the latest edition or revision thereof shall apply.

5.3 MATERIALS

5.3.1 GENERAL

All installed materials shall be free from defects. Any defective or damaged materials, including pipes and fittings that do not allow sufficient and uniform clearance for jointing, shall be marked and removed from the site.

5.3.1.1 DAMAGED MATERIAL

5.3.1.1.a Contractor Furnished Material

Any material that is furnished by the Contractor to be installed in the work that is found to be damaged, defective, or otherwise unsatisfactory, shall be removed from the site and repaired or replaced by the Contractor at no cost to the District.

5.3.1.1.b District Furnished Material

Any material which is furnished by the District to the Contractor shall be thoroughly inspected and operated by the Contractor to the extent that he is satisfied that it is in proper operating condition. If the Contractor is not satisfied, he shall refuse acceptance of the item. Once the item is accepted from the District, it shall be presumed to be in satisfactory working order. Any subsequently discovered unsatisfactory condition of the item shall be deemed to have been caused by the Contractor, unless the District agrees that the unsatisfactory condition is of such a

nature that it could not have been reasonably discovered by the Contractor during its initial inspection and acceptance. In this case, a replacement item shall be provided by the District.

5.3.1.2 ADDITIONAL MATERIAL

All connections, straight runs or other piping configurations shall be installed as shown on the Approved Documents. If field conditions make such installations impossible, an alternate method, approved by the District in writing, shall be employed. The Contractor shall be responsible for obtaining any additional piping material and fittings needed.

5.3.1.3 UNUSED MATERIAL

All material supplied by the District which is not used during construction shall remain the property of the District. After initial acceptance of the work, the material shall be delivered to the District's storage yard in the same condition in which the Contractor accepted it.

5.3.1.4 SALVAGED MATERIAL

All existing pipe, valves, hydrants, fittings and miscellaneous items that are rendered unnecessary by the proposed improvements and are taken out of service shall remain the property of the District. That material designated on the drawings or which the District may otherwise deem salvable shall be removed from its location, thoroughly cleaned, and delivered to the District's storage yard.

5.3.1.5 ALLOWABLE MATERIALS

All materials shall conform to the District’s Approved Construction Materials List located in Appendix E. In general, the materials listed will be acceptable for use in the designated sizes and under the designated conditions. Materials not listed in Appendix E are not approved for construction.

5.3.2 POTABLE WATER SYSTEM AND IRRIGATION SYSTEM MATERIALS

5.3.2.1 PIPE

Although the information provided in this section applies to nominal pipe sizes 4-inch through 24-inch, it does not exclude the use of larger pipe sizes within the District where required. Pressure Class, thrust block size, restraint length, and other applicable specifications associated with the design of lines larger than 24-inch shall be included in the submittal for review by the District.

All PVC potable system pipe shall be manufactured in a blue color. All PVC irrigation system pipe shall be manufactured in a purple color and shall be

embossed or integrally stamped with a statement that clearly indicates the pipe does not contain potable water.

All ductile iron irrigation system pipe and fittings shall be encased in a minimum 8-mil thick purple PE wrap and shall be taped continuously along the top of the pipe with purple warning tape that clearly and continuously indicates that pipe does not contain potable water.

All pipe shall be installed in accordance with manufacturer recommended installation practices unless otherwise approved in writing by the District.

5.3.2.1.a Ductile Iron Pipe Nominal Sizes 4-inch Through 24-inch

Ductile iron pipe shall conform to ANSI/AWWA C151/A21.51 and other applicable standards as follows: push-on joints utilizing rubber ring gaskets conforming to ANSI/AWWA C111/A21.11; cement mortar lining conforming to ANSI/AWWA C104/A21.4; bituminous outside coating approximately one mil thick; each pipe marked with the weight and class designation. Ductile iron pipe shall be supplied in the following minimum pressure classes:

Nominal Diameter (inches)	Pressure Class (ANSI/AWWA C150/A21.50)
4	350
6	350
8	350
12	350
16	250
20	250
24	200

5.3.2.1.b Polyvinyl Chloride (PVC) Pipe Nominal Sizes 4-inch Through 24-inch

PVC pipe shall conform to all requirements of ANSI/AWWA C900 with the exception that it must be supplied in the following minimum dimension ratios:

Nominal Diameter (inches)	Dimension Ratio
4	18 (Irrigation Only)
6	18 (Irrigation Only)
8	18
12	18
16	18
20	18

24 18

PVC pipe shall have outside diameters equivalent to cast iron pipe and each pipe shall be marked as required by ANSI/AWWA C900.

5.3.2.2 PIPE JOINTS (STRAIGHT RUN PIPE)

5.3.2.2.a Ductile Iron Pipe

5.3.2.2.a(1) Flanged

Flanged joints shall be used for all indoor piping or rigid out-of-doors piping. Unless specifically required by the drawings, or approved by the District, no flanged joints shall be buried underground except on wet-tap saddle connections. Flanged joints for pipe and fittings shall conform to ANSI/AWWA C115/A21.15 and be supplied with a red oxide primer coating. Contractor shall field paint all indoor piping per the District's paint schedule.

5.3.2.2.a(2) Mechanical and Push-on Joints

Mechanical joints and push-on joints shall be used for buried service piping. Unless specifically required by the drawings or approved by the District, no mechanical or push-on joint pipe shall be used indoors. Mechanical joints and push-on joints shall conform to ANSI/AWWA C110/A21.10 and ANSI/AWWA C111/A21.11.

5.3.2.2.b PVC Pipe

Integral bell and spigot joints shall be used with PVC pipe. The bell shall consist of an integral wall section designed to be at least as strong as the pipe wall section and shall have a solid cross section rubber or elastomeric ring securely fixed within the bell. Solvent welded joints are not permitted.

5.3.2.3 FITTINGS

All fittings (bends, valves, reducers, tees, wyes, and crosses) used with ductile iron or PVC pipe shall be ductile iron with mechanical joint ends, manufactured in accordance with ANSI/AWWA C110/A21.10 or to ANSI/AWWA C153/A21.53. Fittings shall be lined with cement mortar in accordance with ANSI/AWWA C104/A21.4 and coated with a bituminous material. Fittings may also be lined and coated with fusion-bonded epoxy in accordance with ANSI/AWWA C116/A21.16. All fittings shall have a pressure rating of at least 250 psi.

Branch line fittings at fire hydrant connections may be anchoring tees with swivel adapters or anchoring couplings, or restrained mechanical joint fittings.

5.3.2.4 BOLTS, NUTS AND GASKETS

Bolts, nuts and gaskets for mechanical joints or fittings shall conform to ANSI/AWWA C111/A21.11, with tee-head bolts and hexagon nuts fabricated from a high-strength, low alloy steel.

Bolts for flanged pipe shall have chamfered or rounded ends projecting 1/4 to 1/2-inch beyond the outer face of the nut. Bolts and nuts shall conform to ASTM A307. Gaskets for flanged pipe shall be 1/8-inch Grade I rubber, full-face type, and shall conform to ASTM D1330.

5.3.2.5 VALVES AND VALVE BOXES

5.3.2.5.a General

All valves used for buried service shall have mechanical joint ends. Valve operators shall be equipped with a 2-inch square operating nut in black coating and shall open by turning left (counterclockwise). Valves 8 inches and smaller in size shall be gate valves. Valves 12 inches in size may be gate valves or butterfly valves. Valves 16 inches and larger in size shall be butterfly valves.

Valves on pipelines shall be the same size as the mains on which they are installed.

5.3.2.5.b Butterfly Valves

All butterfly valves shall be suitable for buried use, and shall have a 150 psi rated working pressure unless otherwise required by the District. Butterfly valves shall be tight closing with rubber seats applied to the disc and shall meet the strength and performance requirements of ANSI/AWWA C504. The vane of the valves shall rotate 90 degrees from fully closed to fully open and shall be aligned with the centerline of the pipe when fully open. The valves shall have permanent, self-adjusting packing. The operators shall be suitable for fully buried, submerged soil operation, shall be fully gasketed and grease packed, and shall be capable of withstanding a torque of 300 ft-lbs. The operating nut shall face on the north or east side of mains or as otherwise approved in writing by the District.

5.3.2.5.c Gate Valves

All gate valves shall be suitable for buried use and shall have a minimum 200 psi rated working pressure unless otherwise required by the District. Gate valves shall be manufactured in accordance with ANSI/AWWA C509 and shall have a resilient seat, a non-rising stem, and "O" ring stem seals.

5.3.2.5.d Combination Air Valves

At all high points on water mains 12-inch and larger, combination air valves shall be installed in manholes in accordance with the Standard Details. Air valves may also be required by the District on smaller pipe sizes under certain circumstances (e.g. where a high point is created and there are no service lines in the vicinity). The combination air valves shall be of heavy-duty construction, suitable for service at pressures up to 250 psi. Combination air valves installed shall have ~~1~~ 2-inch orifices. Combination air valves shall be equipped with soft-seating to prevent leakage at valve closure when installed on transmission mains and on any other main where working pressures are either less than 25 psi, or within the soft-seating range as recommended by the manufacturer.

5.3.2.5.e Potable Valve Boxes

All buried valves shall be furnished with valve boxes and covers. Valve boxes shall be cast iron with a minimum diameter of five inches and shall meet the requirements of ASTM A 48, Class 35B. The word “WATER” shall be cast on the valve box cover. Valve boxes shall be two-piece, 5-1/4 inch screw-type rated for H-20 traffic loading. Minimum height adjustment shall be 2 feet and shall be facilitated by screw threads that allow the top piece of the valve box to be screwed up or down, resulting in adjustable heights ranging from 36 inches to 54 inches. (Refer to Standard Detail W-1.) For valve boxes on water lines deeper than 54 inches, a valve box with adjustable screw type couplings/nipple shall be used. (Refer to Standard Detail W-2.) Valve extension stems are not allowed in deeper valve boxes.

The Contractor shall be responsible for setting valve boxes relative to rough (existing) grade at the time of installation such that the box can be later raised to final grade without requiring an additional extension. Valve boxes shall not be installed in concrete gutters, cross-pans, alleys, or driveways. All valve boxes located out of pavement shall have a concrete collar installed around the upper portion of the valve box.

5.3.2.5.f Irrigation Valve Boxes

All buried valves shall be furnished with valve boxes and covers. Irrigation system valve boxes shall be rigid screw type Castings 500 series or approved equal, 5-1/4 inch rated for H-20 traffic loading. The valve box shall meet the material, size and dimension requirements described in Standard Detail W-2A. All valve box lids on distribution mains in the irrigation system shall in all cases have triangular cast iron lids with a triangular top section as part of the top piece of the valve box with the word "IRRIGATION" or an acceptable abbreviation cast on the cover. Valve extension stems are not allowed in irrigation valve boxes.

The Contractor shall be responsible for setting valve boxes relative to rough (existing) grade at the time of installation such that the box can be later raised to final grade without requiring an additional extension. Valve boxes shall not be installed in concrete gutters, cross-pans, alleys, or driveways. All valve boxes located out of pavement shall have a concrete collar installed around the upper portion of the valve box.

5.3.2.6.a DISTRICT FIRE HYDRANTS

Fire hydrants shall have a minimum working pressure rating of 200 psi unless otherwise required by the District, and shall conform to AWWA C502. Hydrants shall be 3-way with 2 hose nozzles (2-1/2 inch) and one pumper nozzle (4-1/2 inch), with National Standard Thread, and shall have traffic breakaway features. The opening size of the hydrant foot valve shall be 5-1/4 inches and shall be of the compression type. The foot valve shall open by turning left and the connection between the hydrant shoe and lateral shall be a restrained 6-inch mechanical joint. Thrust blocks and joint restraint shall be as shown in the District's Standard Details. Hydrants shall be furnished with a 1-1/2 inch pentagon operating nut and shall be factory painted safety yellow. If the fire hydrant must be repainted, it shall be painted with Rustoleum high performance yellow enamel – 242258.

The maximum depth of fire hydrants shall be 6.5 feet as measured from the bottom of the hydrant shoe to the hydrant flange. When necessary, hydrant extensions shall be used to ensure that the hydrants are properly located relative to final grade. The breakaway safety flange must be located above final grade.

5.3.2.6.b PRIVATE FIRE HYDRANTS

All private fire hydrant maintenance is the responsibility of the property owner and shall be noted on the approved development plans. Hydrants shall be furnished with a 1-1/2 inch pentagon operating nut and shall be factory painted red. If the private fire hydrant must be repainted, it shall be painted with Rustoleum high performance safety red enamel - 7564.

5.3.2.7 IRRIGATION FLUSHING HYDRANTS

Flushing hydrants shall have a minimum working pressure rating of 200 psi unless otherwise required by the District, and shall conform to AWWA C502. Hydrants shall be 2-way with 2 hose nozzles (2-1/2 inch), with National Standard Thread, and shall have traffic breakaway features. The opening size of the hydrant foot valve shall be 5-1/4 inches and shall be of the compression type. The foot valve shall open by turning left and the connection between the hydrant shoe and lateral shall be a restrained 6-inch mechanical joint. Thrust blocks and joint restraint shall be as shown in the District's Standard Details. Hydrants shall be furnished with a

hydrant lock and shall be factory painted purple. Acceptable models are listed in the Approved Construction Materials List in Appendix E.

The maximum depth of flushing hydrants shall be 6.5 feet as measured from the bottom of the hydrant shoe to the hydrant flange. When necessary, hydrant extensions shall be used to ensure that the hydrants are properly located relative to final grade. The breakaway flange must be located above final grade.

5.3.2.8 MANHOLE AND VAULT MATERIALS

Manhole materials utilized in the District's water system on air valve manholes, single and multi-meter manholes, and meter vaults shall be furnished in accordance with the District's Standard Details. Precast manhole risers shall be manufactured in conformity with ASTM C478 and shall be designed for H-20 traffic loading. Manhole frames, rings, and covers shall likewise be designed for H-20 traffic loading. Concrete strength, manhole steps, and jointing between riser sections shall conform to the requirements established for sewer manholes in Section 5.3.3.3. Manhole covers furnished for any facilities conveying potable water shall be furnished with the word "WATER" cast on the manhole cover.

Manhole covers furnished for any facilities conveying irrigation water shall be furnished with the word “IRRIGATION” or an acceptable abbreviation cast on the cover in accordance with the Standard Details. Irrigation mains and service lines through manholes and vaults shall be constructed with the distinguishing features of the irrigation system as established in Section 5.3.2.1.

5.3.2.9 JOINT RESTRAINT

5.3.2.9.a General

All push-on joint and mechanical joint pipe shall be restrained for the appropriate lengths and in the appropriate directions at all tees, dead ends, and bends of 11-1/4 degrees or greater. Such joint restraint shall be provided in accordance with the District’s Standard Details by use of both constructing concrete thrust blocks and by restraining joints along a sufficient length of pipe to resist the separation of joints through soil friction. For new pipelines, all bends in the vertical direction shall have tied pipe lengths in accordance with the District’s Water Main Lowering Detail. When a new water line lowering or vertical bends are installed on an existing pipeline, the existing pipeline shall be restrained in each direction in accordance with the District’s Standard Details. In-line valves on push-on joint PVC mains shall be restrained in each direction from the valve in accordance with the District’s Standard Details.

5.3.2.9.b Concrete Thrust Blocks

Concrete thrust blocks shall be installed at all locations required by these standards and constructed in accordance with the District's Standard Details. Concrete shall be physically separated from pipe, fittings, and fire hydrants by use of a bond breaker (plastic sheeting). The concrete shall be placed against the fitting and shall extend continuously to an undisturbed trench wall. Care shall be taken to ensure that bolts, nuts, clamps, tie rods, or other adjustable parts are not covered or made inaccessible by the concrete. Thrust blocks behind fire hydrants shall be constructed to ensure that the concrete does not prohibit free drainage from the drain openings. Refer to Detail W-7 for requirements.

Concrete for thrust blocks shall have a minimum cement content of five sacks per cubic yard and a maximum water content of six gallons per sack of cement. The concrete shall have a minimum 28-day compressive strength of 2,500 psi.

5.3.2.9.c Tied Pipe Lengths

Pipe lengths of either ductile iron or PVC shall be tied together in accordance with the District's Standard Details to establish sufficient soil friction capable of resisting joint separation. The lengths of restrained pipe specified in the District's Standard Details are the minimum lengths required in each direction from the fitting, and may be longer if so required by the plans or specifications. In general, the joint restraint methods described below will be acceptable to the District. Alternate methods of joint restraint shall be submitted to the District for review and approval prior to use in the work.

5.3.2.9.c(1) Wedge Style Joint Restraint for Mechanical Joint Ductile Iron Pipe and Mechanical Joint Fittings on Ductile Iron Pipe

Refer to the District's Approved Construction Materials List for accepted wedge style joint restraint for mechanical joint ductile iron pipe and fittings. The joint restraint shall be incorporated into the design of the follower gland and shall include a restraining mechanism which, when actuated, imparts multiple wedging action against the pipe, increasing its resistance as the pressure increases. Flexibility of the joint shall be maintained after burial. Glands shall be manufactured of ductile iron conforming to ASTM A536. Restraining devices shall be of ductile iron and heat treated to a minimum hardness of 370BHN. Dimensions of the gland shall be such that it can be used with the standardized mechanical joint bell and tee-head bolts conforming to ANSI/AWWA C110/A21.10, ANSI/AWWA C111/A21.11 and ANSI/AWWA C153/A21.53. Twist-off nuts shall be used to ensure proper actuating of the restraining devices. The mechanical joint restraint devices shall have a working pressure of at least 250 psi with a minimum safety factor of 2:1. A torque indicating wrench shall be utilized for all restraint systems in accordance with the manufacturer's installation instructions.

5.3.2.9.c(2) Joint Restraint for Push-on Joint PVC Pipe and Mechanical Joint Fittings on PVC Pipe

Refer to the District's Approved Construction Materials List for accepted joint restraint for push-on joint PVC pipe and mechanical joint fittings on PVC pipe.

5.3.2.9.c(3) Wedge Style Joint Restraint for Push-on Joint Ductile Iron Pipe

Refer to the District's Approved Construction Materials List for accepted wedge style joint restraint for push-on joint ductile iron pipe.

5.3.2.9.c(4) Boltless Restraint for Push-on Joint Ductile Iron Pipe

Refer to the District's Approved Construction Materials List for accepted boltless joint restraint for push-on joint ductile iron pipe.

5.3.2.10 PIPE SERVICE SADDLES

All pipe saddles for service line connections of 3/4-inch and 1-inch sizes shall be brass or ductile iron and shall be furnished with brass or stainless steel straps in either a double-strap configuration with a minimum strap width of ~~2~~ 1 1/2 inches each, or a single wide-band configuration with a minimum band width of 3 inches. U-bolt attachments are not allowed. Saddles shall have an epoxy or nylon coating and be furnished with stainless steel washers and nuts of heavy hexagon design.

Service line connections 1-1/2 inch in size and larger shall be made with double strap iron service saddles.

5.3.2.11 SERVICE LINES

5.3.2.11.a General - Potable

Service lines from the water main up to and including the meter pit and the appurtenances contained therein shall be installed as dictated in the tap fee schedule and owned by the District. The service line from the main to the meter pit shall be one continuous length without splices. The actual meter shall be both installed and owned by the District. Service lines between the meter pit up to and within the property owner's building shall be installed by the Contractor/Developer and owned by the property owner. All service line work between the main and building shall be in accordance with the District's Standard Details and shall be inspected and approved by the District. Multiple taps on the same side of the main shall be spaced a minimum of 4 feet apart, measured longitudinally along the centerline of the main. Multiple taps on opposite sides of the main shall be staggered by a minimum of 2 ½ feet. Taps shall not be made within 3 feet of any main line bell or fitting.

5.3.2.11.b General – Irrigation

Service lines from the irrigation main up to and including the meter pit and the materials contained therein shall be installed as dictated in the tap fee schedule and owned by the District. The service line from the main to the meter pit shall be one continuous length without splices. The actual meter shall be both installed and owned by the District. Service lines after the meter pit up to and including the backflow preventer shall be installed by the Contractor/Developer and owned by the property owner. This shall include the stop-and-waste valve and valve box as identified in the District's Standard Details. Multiple taps on the same side of the main shall be spaced a minimum of 4 feet apart, measured longitudinally along the centerline of the main. Multiple taps on opposite sides of the main shall be staggered by a minimum of 2 ½ feet. Taps shall not be made within 3 feet of any main line bell or fitting.

Backflow prevention devices shall be furnished and installed in conformance with the District's Rules and Regulations, Article V. Each customer shall be responsible for the design and construction of the irrigation system after the backflow preventer.

Irrigation water service lines shall be clearly distinguishable from potable water service lines. The pipe shall be clearly marked to indicate that the service line does not contain potable water in accordance with Section 5.3.2.11.d.

The SFR irrigation service line stub-out shall be that portion of line that extends from the meter pit to the backflow prevention device as shown in the District's Standard Details. The valve box lid shall be furnished with the word “IRRIGATION” or an acceptable abbreviation cast on the cover. Valve key extensions shall be furnished in each stop and waste valve box in conformance with the District's Standard Details. A 90-degree compression fitting shall be installed near the building where the service line turns vertically to continue above ground to the backflow preventer.

5.3.2.11.c Pipe - Potable

- Service lines of 3/4-inch and 1-inch nominal sizes installed between the main and the required compression coupling at the end of the stub-out on the customer side of the meter pit shall be in accordance with the District’s Approved Construction Materials List in Appendix E. The service line beyond the compression coupling may be either Type K copper tubing or material allowed in the Approved Construction Materials List.

- Service lines of 1-1/2 inch and 2-inch nominal sizes shall be Class 200 copper tube size polyethylene between the main and the building and shall be rated for potable water service.

- Service lines of 3-inch nominal size and larger shall be ductile iron between the main and the building. Pressure testing is required per the District testing procedure as described in Section 5.5.1.2.

5.3.2.11.d Pipe - Irrigation

- Service lines of 3/4-inch and 1-inch nominal sizes installed between the main and the 90-degree fitting at which the service line proceeds vertically to the backflow preventer shall be purple pipe in accordance with the District's Approved Construction Materials List in Appendix E. It is required that the vertical portion of the service line beyond the 90-degree fitting be Type K copper rated for above ground exposure.

- Service lines of 1-1/2 inch and 2-inch nominal sizes shall be Class 200 copper tube size polyethylene between the main and the meter manhole and shall be rated for potable water service. The service line shall be purple polyethylene or shall be clearly marked in conformance with the requirements established for ductile iron pipe in Section 5.3.2.1.

- Service lines of 3-inch nominal size and larger shall be ductile iron between the main and the meter vault, and shall be wrapped with purple polyethylene encasement material with irrigation line magnetic tape installed above the line as established in Section 5.3.2.1. Pressure testing is required per the District testing procedure as described in Section 5.5.1.2.

5.3.2.11.e Connection to Water Mains

5.3.2.11.e(1) Service Line Connections to Ductile Iron Pipe

All service line connections to ductile iron, PVC, or asbestos cement pipe shall be made with double strap/band brass or ductile iron service saddles as described in Section 5.3.2.10. All service line connections to cast iron pipe shall be saddled unless otherwise allowed by the District.

5.3.2.12 SERVICE LINE WATER METERS

5.3.2.12.a Meter Sizes 5/8-inch to 2-inch

The District shall provide the meter to the customer in sizes 5/8-inch to 2-inch.

5.3.2.12.b Meter Sizes 3-inch and Larger

The Developer/Contractor shall provide the meter for 3-inch and larger meters. Meters shall be either a turbine or compound meter as determined by the District

on a case by case basis and shall conform to AWWA C701 or C702. Meters shall be equipped with a remote-read register and transceiver conforming to AWWA C707 that reads in 1,000 gallon increments and allows the meter to read by radio. Refer to the Approved Construction Materials List for acceptable meters and reading equipment.

5.3.2.13 COPPER METER SETTERS

5.3.2.13.a Potable Copper Meter Setters

Potable water meters 5/8-inch through 1-inch shall have a ball angle valve and a lockable wing and set in meter pits 18 inches below final grade and shall be connected to an approved copper meter setter.

Contractor shall install the meter setter at finished grade as illustrated in detail sheet WI-4.

For potable water meters 1-1/2 inch and 2-inch in size, copper setters shall be 15 inches high and have ball angle valves and lockable wings. Refer to the Approved Construction Materials List for approved models.

5.3.2.13.b Irrigation Copper Meter Setters

Irrigation water meters 5/8-inch through 2-inch shall be set in meter pits or meter manholes and connected to meter setters pre-built specifically for the District's irrigation system, or alternates that have been explicitly approved by the District. Irrigation water meters 1½-inch through 3-inch shall have a lockable bypass.

5.3.2.14 WATER METER PITS, MANHOLES AND VAULTS

5.3.2.14(a) Potable Water Meter Pits, Manholes and Vaults

Meter pit materials shall be furnished in accordance with the District’s Standard Details. Covers for potable water meter pits, meter manholes and vaults shall be furnished with the word "WATER" cast on the cover. All manholes that are not located within paved streets shall have lockable manhole rings and covers in accordance with the Approved Construction Materials List. Meters and “Radio-Read” transmitters will be installed by the District.

Meter pits for service lines 5/8-inch through 3/4-inch in size shall have 24-inch diameter, 4-foot high plastic or concrete bases with a 20-inch diameter top opening to support a cast iron dome and cover. Meter pit domes shall be cast iron with recessed covers, and shall be furnished with plastic deep-dish lids containing pre-drilled drain holes. The cover shall include a 1-3/4 inch hole in the center and shall be secured with a pentagon nut measuring 27/32-inch. Meter pits for 1-inch

service lines shall have 30-inch diameter, 40-inch high plastic or concrete bases with a secured 30-inch ring and cover.

Meter pit materials for service lines larger than 1-inch shall be furnished in accordance with the District's Standard Details. Meter pits for 1-1/2 inch and 2-inch services shall be 5-foot diameter precast concrete meter manholes. Meter pits for 3-inch services and larger shall be concrete vaults with minimum dimensions of 9-feet long by 7-feet wide (inside dimensions). All appurtenances for meter pits 3-inch and larger, including bypass line components, shall be fully contained within the vault. When required, larger vaults shall be submitted to the District for review and approval.

Upon specific direction by the District, up to eight potable service meters for single-family attached dwellings and multi-family townhouses shall be located in single 10-foot by 7-foot (inside dimensions) precast rectangular vaults. Meter arrangement and furnished materials shall be in accordance with the District's Standard Details for multi-setter meter manholes.

5.3.2.14(b) Irrigation Water Meter Pits, Manholes and Vaults

Irrigation system meter pits for service lines 5/8-inch through 3/4-inch in size shall be 48-inch high plastic pits that are 24 inches in diameter, and that taper to a 20-inch diameter top opening designed to support a cast iron dome and cover. Meter pits for 1-inch service lines shall be 30-inch diameter, 40-inch high plastic pits with a secured 30-inch ring, cover and frost lid. Meter pit domes shall be cast iron with cap-type covers to distinguish them from the recessed covers used for meter pits in the potable water system, and shall be furnished with plastic deep-dish lids containing pre-drilled drain holes. The cover shall include a 1-3/4 inch hole in the center and shall be secured with a pentagon nut measuring 27/32-inch.

Meter pit materials for service lines larger than 1-inch shall be furnished in accordance with the District's Standard Details. Meter pits for 1-1/2 inch and 2-inch services shall be 5-foot diameter precast concrete meter manholes. Meter pits for 3-inch services and larger shall be concrete vaults with minimum dimensions of 9-feet long by 7-feet wide. All appurtenances for meter pits 3-inch and larger, including bypass line components, shall be fully contained within the vault. When required, larger vaults shall be submitted to the District for review and approval. Covers for irrigation meter pits, meter manholes and vaults shall be furnished with the word "IRRIGATION" or an acceptable abbreviation cast on the cover. All manholes that are not located within paved streets shall have lockable manhole rings and covers in accordance with the Approved Construction Materials List. Meters and "Radio-Read" transmitters shall be installed by the District.

5.3.2.15 FIRE HYDRANT LATERAL LINES

All fire hydrant lateral lines shall be 6-inch ductile iron pipe.

5.3.2.16 FIRE SERVICE LINES

All materials used in the construction of fire service lines (valves, pipe, and fittings) shall be supplied and installed in accordance with NFPA 24 requirements and must be approved by the local fire authority. All materials supplied shall have a minimum pressure rating of 200 psi.

5.3.2.17 POLYETHYLENE WRAPPING

Ductile iron pipe and fittings shall be wrapped in clear polyethylene encasement in accordance with ANSI/AWWA C105/A21.5.

5.3.2.18 TRACER WIRE

Tracer wire shall be #12 Gauge direct bury, high strength copper clad steel tracer wire. Tracer wire shall be color coded according to use (i.e. blue for potable, purple for irrigation, and green for sewer), and shall be installed on mains, fire lines, and service line laterals in order to be electronically locatable to the foundation of the property pursuant to Colorado State Law. The tracer wire shall be taped at the 12:00 position every six to eight (6-8) feet. with 2'' wide 10 mil poly tape. Splices in tracer wire shall be connected using District approved tracer wire connectors as stated in the Approved Construction Materials List.

Grounding anodes shall be installed at all dead ends, and where specified by the District. Grounding anodes are listed in the Approved Materials List.

5.3.2.19 TRACER WIRE TEST STATIONS

Tracer wire test stations shall be furnished and installed in accordance with the District's Standard Details measuring 2-1/2 inches in diameter and 18 inches high.

5.3.2.20 AIR VALVE MANHOLES

Air valve manholes shall conform to the District's Standard Details. Air valve manholes shall be vented with 6-inch Schedule 40 PVC pipe. Refer to the Approved Materials List for acceptable vent pipe cover models. The vent pipe and cover shall be installed according to Details W-4 and W-5, and tracer wire shall be installed on the vent pipe between the manhole and the vent cover.

Manhole ring and covers used for air valve manholes on potable water mains shall be furnished with the word "WATER" cast on the cover. Manhole ring and covers used for air valve manholes on irrigation water mains shall be furnished with the word "IRRIGATION" or an acceptable abbreviation cast on the cover. All manholes that are not located within paved streets shall have lockable manhole rings and covers in accordance with the Approved Construction Materials List.

5.3.2.21 WET TAPS ON EXISTING WATER MAINS

Wet taps on existing ductile iron or PVC water mains shall be made with either a stainless steel tapping sleeve or a fused epoxy coated mechanical joint tapping sleeve. Wet taps on existing cast iron and asbestos-cement water mains shall be made with a fused epoxy coated mechanical joint tapping sleeve. Size on size wet taps will not be allowed by the District.

5.3.2.22 WATER QUALITY SAMPLING STATIONS

Potable sampling stations shall be in accordance with the Approved Materials List. The waterway shall be 304 stainless steel. Stations shall be ordered with a bury depth of 5 feet and the District's information imprinted into the door of the sampling station. The sampling station shall be installed directly to the water main with 3/4-inch service line and a corporation stop within a curb stop box per the District's standard detail contained in Section 6.

5.3.3 SANITARY SEWER SYSTEM MATERIALS

5.3.3.1 PIPE FOR GRAVITY SEWERS

5.3.3.1.a Polyvinyl Chloride (PVC) Pipe – Nominal Sizes 4-inch through 27-inch

PVC sewer pipe in sizes 4-inch through 15-inch shall conform to the requirements of ASTM D3034 and shall be solid wall SDR = 35. PVC sewer pipe in sizes 18-inch through 27-inch shall conform to the requirements of ASTM F679, shall have a minimum pipe stiffness PS-46, and shall be solid wall pipe. The pipe shall be manufactured with integral wall bell and spigot joints with a factory-assembled, solid cross section rubber ring gasket firmly secured in place. The pipe shall be manufactured for the conveyance of sanitary sewage.

Where pipe bury depths exceed 20 feet over the top of the pipe, heavy wall SDR = 26 PVC sewer pipe, corresponding to a pipe stiffness PS-115, shall be used.

The pipe shall be produced by a continuous extrusion process employing a prime grade of unplasticized PVC, and shall be as uniform as commercially practical in color, opacity, density and other physical properties. The pipe and fittings shall be homogeneous throughout and free from visible cracks, holes, foreign inclusions or other injurious defects.

5.3.3.2 PIPE FOR FORCE MAINS

Sewer mains carrying sanitary sewage under pressurized conditions shall be PVC C900 pipe Copy info from 5.3.2.1 – Randy to verify.

5.3.3.3 MANHOLES

5.3.3.3.a General

Sewer manholes shall be constructed complete with covers, steps, fittings, and other appurtenances in accordance with the District's Standard Details.

5.3.3.3.b Strength, Size, and Connector Type

Manholes shall be constructed of precast concrete base, riser, and cone sections. Precast manhole bases, risers, and cones shall be manufactured in conformity with ASTM C478 and shall be designed for H-20 traffic loading. Lifting notches in manhole walls shall be filled with non-shrinking grout. Unless otherwise allowed by the District, precast manholes shall be furnished with resilient connectors (rubber boot sleeves) in the appropriate locations per the plans to accommodate all sewer mains connecting into the manhole. Manholes having an internal diameter of 4 feet shall be used on sewer mains of 24-inch diameter or less. Manholes having an internal diameter of 5 feet shall be used on mains with diameters larger than 24-inch.

Cement type shall comply with ASTM C150, Type II containing not more than 5 percent tricalcium aluminate, or Type V. Water-cementitious materials ratio shall not exceed 0.40. Alternative materials proposed by the Contractor that will provide equivalent corrosion protection and durability may be submitted subject to review and acceptance by the District.

Manhole riser and precast base sections shall be circular with uniform outside diameters, and a minimum wall thickness of 1/12 of the inside diameter measured in inches, plus 1 inch.

5.3.3.3.c Cones and Adjustment Collars

Manhole cones shall be of the eccentric type. The manhole barrel diameter below the cone section shall be maintained to a point not more than 48 inches from final grade, and shall then be tapered to an internal diameter of 24 inches such that the top of the cone sits 8 to 16 inches below final grade. Precast concrete adjustment collars shall be used on top of the precast cone to bring the manhole ring to final grade. No more than 8 inches in adjustment collars may be used to bring the manhole ring to final grade. Additional barrel sections shall be added for any height greater than 8 inches pursuant to District Details for conformance. All joints between concrete adjustment collars shall be sealed with two rows of a flexible mastic gasket material conforming to ASTM C990. No more than one cast iron traffic adjustment ring (riser) may be used to adjust the top elevation of the manhole. If more than one cast iron adjustment ring is required to bring the ring

to final grade elevation, the Contractor shall use additional concrete adjustment collars instead. Cone wall thickness shall be as specified for riser sections.

5.3.3.3.d Base Slabs

Manhole bases for manholes constructed along new sewer mains shall be precast with the base and first riser section cast monolithically. Precast manhole bases shall be set on a minimum 6-inch thick bed of 3/4-inch to 1-1/2 inch crushed rock placed on undisturbed earth.

Manhole bases for manholes constructed over existing sewer mains shall be cast-in-place concrete constructed on a minimum 6-inch thick bed of 3/4-inch to 1-1/2 inch crushed rock placed on undisturbed earth. Cast-in-place manhole bases may be used on new sewer mains only where connecting to existing sewer mains or if specifically approved by the District. Cast-in-place bases shall cure for a minimum of 3 days and achieve 80% design strength prior to installation of manhole barrel sections on the base and backfilling of the manhole. A corrosion protection system shall also be applied to the cast-in-place base following a 28 day cure time in accordance with the manufacturer's instructions.

The first riser sections for use with cast-in-place bases shall be provided with horseshoe-shaped boxouts for connecting piping to be grouted in, or with circular openings with continuous, circular, resilient connectors cast into the riser wall. Boxouts for grouting, if used, shall have surfaces grooved or roughened to improve grout bond.

Precast base sections shall be provided with circular openings, with continuous, circular, resilient connectors cast into the wall.

Resilient connectors (boots) shall be installed in accordance with the manufacturer's recommendations, except that connectors shall be positioned so that the sealing or resealing operations may be accomplished from inside the manhole.

Precast sections may be provided with lifting notches on the inside faces of walls to facilitate handling. Lifting notches shall not be more than 3 inches deep; holes extending through the wall will not be acceptable.

5.3.3.3.e Steps

Manhole steps shall be located inside the manhole sections in accordance with ASTM C478. The steps shall be made of a copolymer polypropylene conforming to ASTM 2146 Type II, Grade 16906. The plastic shall encapsulate a 3/8-inch Grade 60 Steel Rebar. If additional steps need to be added to a manhole section, the steps must be epoxied into the holes that are drilled for the steps.

5.3.3.3.f Rings and Covers

Manhole rings and covers shall be constructed in conformance with ASTM A48, free from cracks, holes, or swells. The minimum cover diameter shall be 24 inches with a traffic loading of H-20. All manholes that are not located within paved streets shall have lockable manhole rings and covers in accordance with the Approved Construction Materials List. All manhole covers used for sanitary sewers shall be furnished with the word “SEWER” cast on the cover.

5.3.3.3.g Concrete

Concrete used in invert channels shall have a 28-day compressive strength of 3500 psi and shall contain not less than 6 sacks of Portland cement per cubic yard. All cement used in concrete and mortar shall conform to ASTM C150 Type II, or Type IIA. Aggregates shall conform to ASTM C33 and air-entraining admixtures shall conform to ASTM C260.

Manhole bases poured in place shall have a 28-day compressive strength of 3500 psi and shall contain not less than 6 sacks of Portland cement per cubic yard. Cement type shall comply with ASTM C150, Type II containing not more than 5 percent tricalcium aluminate, or Type V. Water-cementitious materials ratio shall not exceed 0.40. Alternative materials proposed by the Contractor that will provide equivalent corrosion protection and durability may be submitted subject to review and acceptance by the District.

5.3.3.3.h Joints Between Manhole Sections

All joints between manhole sections shall be sealed with two rows of a flexible mastic gasket material conforming to ASTM C990.

All manhole barrel sections shall be joined by a minimum of 8 inches wide of flexible mastic gasket material (i.e. Conwrap) to minimize or eliminate inflow and infiltration into to the sanitary sewer system.

5.3.3.3.i Connecting Piping

When resilient connectors (boots) are used, the connecting pipe shall be carefully adjusted to proper line and grade, and the bedding material shall be compacted under the haunches and to the springline of the pipe from the manhole wall for the full trench width. The pipe shall be installed in the resilient connector prior to backfilling outside the manhole and shall be resealed as required after completion of the manhole and backfill. All visible leakage shall be eliminated.

The connecting pipe for installation with resilient connectors shall be plain end, square cut spigots and shall not protrude more than one inch inside the manhole wall. After completion of the manhole, the box-out shall be filled with mastic filler

material, completely filling the space beneath the pipe and extending to at least the springline. The filler material shall provide a smooth, uniform surface between the inside diameter of the pipe and the manhole invert.

When approved by the District, direct penetration of sewer mains into a manhole wall without the use of resilient connectors shall be as shown in the District's Standard Detail for Drop Manholes or in the District's Standard Detail for Sewer Main Connections to Existing Manholes. For connecting main sizes whereby the hole can be cored smooth through the manhole wall, a waterstop gasket shall be installed around the pipe, aligned with the center of the wall, and the annular space between the cored opening and the pipe completely filled with nonshrinking grout. Alternatively, a modular seal (Link Seal or approved equal) may be used in place of the waterstop gasket and grouting method on cored openings, as long as a water tight seal can be ensured at the connection. Grouting of the annular space between the pipe and the manhole wall shall still be performed. When larger mains prohibit coring through the manhole wall, the hole shall be made as smoothly and uniformly as possible using methods approved by the District, and shall be no larger than necessary to freely accommodate the size of the connecting main. In accordance with the District's Standard Detail for Sewer Main Connections to Existing Manholes, a waterstop gasket and reinforced concrete collar shall be utilized to secure the connection. Any voids within the manhole wall between the hole and the connecting main shall be completely filled with concrete.

5.3.3.3.j Painting

Before painting, castings shall be thoroughly cleaned and properly supported. All loose rust shall be removed by wire brushing. Castings shall not be handled until the paint is dry and hard.

5.3.3.3.k Stubs

Stubs for future connections shall be provided in manholes at the locations indicated on the drawings. Stubs shall extend not less than 5 feet beyond the edge of pavement or as directed by the District and shall be terminated with a bell and plug.

5.3.3.3.l Interior Corrosion Protection System

A corrosion protection system shall be applied to the interior surfaces of the manhole. The corrosion protection system shall adequately protect the concrete from corrosion caused by exposure to hydrogen sulfide. Corrosion protection systems shall be Sikagard “62” or equal. The corrosion protection system shall be factory applied to all precast manhole sections unless otherwise approved by the District. If the system is damaged during installation, it shall be repaired in accordance with the manufacturer’s requirements.

5.3.3.3.m Dampproofing

Before backfilling is started, the outside surfaces of each manhole shall be coated with one heavy coat of coal tar epoxy. Surfaces to receive coating shall be dry. Dampproofing may be applied to precast units in the shop. If the shop coating is damaged during construction, a touchup coat shall be applied and allowed to dry prior to backfilling.

5.3.3.3.n Cleanouts

Cleanouts on District owned sanitary sewer mains are not allowed.

Cleanouts from the District sanitary sewer main to the building foundation on drainage piping shall be provided where indicated on the Approved Documents. Unless otherwise indicated or required by the applicable code, cleanout size shall equal the line size for 4 inch and smaller drainage piping, and be 4 inches in diameter for drains larger than 4 inch. Proper clearance shall be provided for access to cleanouts.

Refer to the District's Approved Construction Materials List in Appendix E for acceptable cast iron, polypropylene, and PVC cleanout manufacturers.

5.3.3.4 INTERCEPTOR VAULTS

5.3.3.4.a General

All grease and/or sand/oil interceptor installations shall contain two manholes; one accessing the interceptor's discharge line and one accessing the interceptor's influent line. Interceptor vaults shall be constructed in accordance with the District's Standard Details.

5.3.3.4.b Grease Interceptor

Grease interceptor divider walls shall extend a minimum of 10 inches above the first compartment water surface. Water transfer to the second compartment shall be via a 90º pipe elbow, turned down in the first compartment, with the bottom of the elbow located 6 inches to 12 inches above the floor depending on interceptor size.

5.3.3.4.c Sand Oil Interceptor

Sand/oil interceptors shall have a full-size divider wall between the first and second compartments. Flow between the compartments must travel over the top of the divider wall or through slots or ports near the top of the divider wall.

5.3.3.4.d Strength, Size, and Connector Type

Interceptor vaults shall be constructed of precast concrete, monolithic and manufactured to meet the District's interceptor design specifications. Lifting notches in manhole walls shall be filled with non-shrinking grout. Unless otherwise allowed by the District, precast manholes shall be furnished with resilient connectors (rubber boot sleeves) in the appropriate locations per the plans to accommodate all sewer mains connecting into the manhole.

Cement type shall comply with ASTM C150, Type II containing not more than 5 percent tricalcium aluminate, or Type V. Water-cementitious materials ratio shall not exceed 0.40. Alternative materials proposed by the Contractor that will provide equivalent corrosion protection and durability may be submitted subject to review and acceptance by the District.

5.3.3.4.e Rings and Covers

Manhole rings and covers shall be constructed in conformance with ASTM A48, free from cracks, holes, or swells. The minimum cover diameter shall be 24 inches with a a traffic loading of H-20. All manholes that are not located within paved streets shall have lockable manhole rings and covers in accordance with the Approved Construction Materials List. All manhole covers used for sanitary sewers shall be furnished with the word "SEWER" cast on the cover.

5.3.3.4.f Joints Between Interceptor Sections

All joints between interceptor sections shall be sealed with two rows of a flexible mastic gasket material conforming to ASTM C990. Interceptor sections shall be joined by a minimum of 8 inches wide of flexible mastic gasket material (i.e. Conwrap) to minimize or eliminate inflow and infiltration into the sanitary sewer system.

5.3.3.4.g Influent and Effluent Piping

The connecting influent and effluent pipes shall be carefully adjusted to proper line and grade, and the bedding material shall be compacted under the haunches and to the springline of the pipe for a distance of at least 6 feet from the interceptor wall for the full trench width. The influent and effluent pipes shall be installed and sealed with non-shrink grout. All visible leakage shall be eliminated.

5.3.3.4.h Painting

Before painting, castings shall be thoroughly cleaned and properly supported. All loose rust shall be removed by wire brushing. Castings shall not be handled until the paint is dry and hard.

5.3.3.4.i Interior Corrosion Protection System

A corrosion protection system shall be applied to the interior surfaces of the interceptor vault. The corrosion protection system shall adequately protect the concrete from corrosion caused by exposure to hydrogen sulfide. Corrosion protection systems shall be Sikagard “62” or equal. The corrosion protection system shall be factory applied to all precast interceptor sections. If the system is damaged during installation, it shall be repaired in accordance with the manufacturer’s requirements.

5.3.3.4.j Dampproofing

Before backfilling is started, the outside surfaces of each interceptor vault shall be coated with one heavy coat of coal tar epoxy. Surfaces to receive coating shall be dry. Dampproofing may be applied to precast units in the shop. If the shop coating is damaged during construction, a touchup coat shall be applied and allowed to dry prior to backfilling.

5.3.3.4.k Cleanouts

Cleanouts on drainage piping shall be provided where indicated on the Approved Documents, where required by the referenced codes, and on the installation of all Sand/Oil and Grease Interceptors. Cleanouts on drainage piping inside structures shall be located where indicated on the Approved Documents. Additional cleanouts shall be provided where required by the applicable code or authority having jurisdiction.

Unless otherwise indicated or required by the applicable code, cleanout size shall equal the line size for 4 inch and smaller drainage piping, and be 4 inches in diameter for drains larger than 4 inch. Proper clearance shall be provided for access to cleanouts. Floor cleanouts shall be installed flush with the finished floor.

Floor cleanouts shall consist of a two piece body, a threaded plug, an adjustable head, and a cover. Cleanouts installed in floors that include a waterproofing membrane shall be provided with a flashing flange and membrane clamp. Cleanouts installed in partition walls shall be provided with an access cover and frame with a securing screw installed over the cleanout plug. Wall cleanout covers shall be stainless steel. Cleanouts installed in exposed piping shall consist of a ferrule or threaded adapter and a cast brass or bronze plug installed in a T-pattern, 90 degree drainage fitting.

Refer to the District's Approved Construction Materials List in Appendix E for acceptable cast iron, polypropylene, and PVC cleanout manufacturers.

5.3.4 MISCELLANEOUS MATERIALS

5.3.4.1 Marker Posts

Marker posts shall be placed to mark all of the following features when located outside of public roadway pavement: valves, sewer manholes, air valve manholes, transmission line blow-off manholes, irrigation blow-offs, dead-ends stubbed-out for future distribution extensions, and casing pipe ends. If directed by the District, specified bends and tees on potable and irrigation water mains located outside the pavement shall also be marked.

Standard District marker posts shall be flexible, color-coded "carsonite" posts. Markers shall be appropriately stenciled in permanent ink or stickers in a manner that clearly identifies the feature by virtue of the marker color, the distance and abbreviation indicated on the marker, and the orientation of the post towards the facility. Carsonite markers shall be blue for potable water features, purple for irrigation water features, and green for sanitary sewer features.

Under certain conditions, the District may direct that the marker posts be 3-inch diameter galvanized steel pipes in accordance with the District's Standard Details. This may be required when a single steel marker post is able to conveniently provide labeling for more than one feature that would otherwise require multiple carsonite posts.

5.3.4.2 Electronic Marking Systems

Electronic marking system devices shall be used in addition to tracer wire and marker posts for locating purposes and shall be placed to mark potable and irrigation water and service lines; fire lines; sanitary sewer mains and service laterals; and sewer force mains: vertical and horizontal mechanical joint bends or high deflection couplings, tees and crosses as directed by the District, dead-ends stubbed-out for future distribution extensions, and casing pipe ends.

5.3.4.2a TRACER WIRE

All tracer wire shall have 30 mil thickness HDPE insulation intended for direct bury. Tracer wire shall be #12 gauge single conductor direct bury with a minimum 450 pound break load, high strength copper clad steel tracer wire. Tracer wire shall be color coded according to use, and shall be installed on mains, fire lines, and service line laterals to the property pursuant to Colorado State Law. The tracer wire shall be taped at the 12:00 position every six to eight (6-8) feet with 2'' wide 10 mil poly tape. Splices in tracer wire shall be connected using District approved tracer wire connector as stated in the Approved Construction Materials List.

Grounding anodes shall be installed at all dead ends, and where specified by the District. Grounding anodes are listed in the Approved Materials List.

5.3.4.2b TRACER WIRE TEST STATIONS

Tracer wire test stations on water, sewer, and irrigation system facilities shall be furnished and installed in accordance with the District's Standard Details measuring 2-1/2 inches in diameter and 18 inches in depth.

5.3.5 PAVEMENT REPLACEMENT MATERIALS

All asphalt or concrete pavement replacement materials in the public right-of-way shall comply with the requirements of Adams County, Commerce City, and/or CDOT. CDOT, or any other governmental entity having jurisdiction over pavement replacement.

5.4 CONSTRUCTION OF WATER, IRRIGATION, AND SANITARY SEWER FACILITIES

5.4.1 EXCAVATION

5.4.1.1 GENERAL

All excavation shall be by open cut methods except where the presence of structures makes open cuts undesirable. In such instances, tunneling, boring, or jacking methods shall be used as required by the plans, and may be utilized in other situations provided written permission from the District is obtained prior to the commencement of such work. In no case will tunneling without shoring or the appropriate supports be permitted for distances greater than 6 feet. When tunneling, boring or jacking is permitted, it shall be performed only by persons experienced in that work.

Tunneling under curb and gutter, sidewalk or combination curb, gutter and sidewalk is not allowed within the City of Commerce City. Jacking is permitted, but the hole may only be one-inch greater in diameter than the pipe being placed through it.

Safety on the project site shall be the sole responsibility of the Contractor performing the work. Nothing stated in these documents shall be construed as requiring the Contractor to perform or not to perform any step that the Contractor believes would create an unsafe condition.

5.4.1.2 EXCAVATION SUPPORTS

The Contractor shall provide all necessary bracing to prevent cave-ins which might endanger life or property. The bracing shall be of sufficient strength and spacing to ensure complete safety and shall be left in place until backfilling starts. All excavated material shall be piled in a manner that will not endanger the work and that will avoid unnecessarily obstructing roadways. Grading shall be performed as required to prevent surface water from entering the excavations.

Sheet piling, shoring and bracing shall be in accordance with any applicable laws of the State of Colorado and any applicable provisions of the Occupational Safety and Health Administration. Temporary support and the means to adequately protect and maintain all surface and underground structures, drains, sewers and other obstructions encountered in the progress of the work, shall be furnished by the Contractor at its expense. Any disturbed structures shall be restored by the Contractor at its expense to equal or better condition than the original. The Contractor shall proceed with caution in the excavation so that the exact location of underground structures, both known and unknown, may be determined. The District shall not be held liable for repair or replacement when such structures are broken or otherwise damaged.

5.4.1.3 TRENCHES

Trenches shall be excavated to the width necessary to permit the pipe to be installed properly and safely in accordance with any applicable laws of the State of Colorado and any applicable provisions of the Occupational Safety and Health Administration. The trench width at the trench bottom shall not exceed the outside diameter of the pipe plus 16 inches, unless the District specifically approves a wider trench. The trench shall be excavated to the proper depth and the trench bottom shall be graded to provide uniform bearing and support for the pipe for its entire length.

Whenever soil is encountered in the bottom of the trench that is, in the opinion of the District Representative, incapable of supporting the pipe, such soil shall be removed to the depth directed and the trench backfilled and compacted to the proper grade with approved trench stabilization materials.

Not more than 400 feet of trench may be left open at any time. At the conclusion of each day's work, all trenches shall be backfilled to eliminate the possibility of entry by pedestrians and motorists. Only after explicit approval by the District to use proposed barricading or fencing shall any excavations, regardless of size or type, be left open at night. Every effort shall be made to complete all backfill operations before each working shift has ended. Open trenches during periods of shutdown must be approved by the District.

5.4.1.4 PAVEMENT CUTS AND REPLACEMENT

Specifications pertinent to pavement cuts and replacement as required by Adams County, Commerce City, CDOT, or any other applicable legal entity shall take precedence over the specifications contained within this Section. The Contractor shall take full responsibility for obtaining all necessary permits required for street cuts.

Where excavation is required under paved areas, the pavement shall be cut in a manner to affect a smooth, straight-cut edge. The pavement edge shall be a sufficient distance from the edge of the trench so that the remaining pavement will not be damaged during the pipe laying process. If the pavement edge is found to be damaged after the completion of pipe laying and backfilling of the trench, the damaged pavement shall be removed from the undamaged existing pavement by cutting in a manner to produce a straight, smooth edge to which the replacement pavement patch may be joined. Prior to placement of pavement, the exposed sides of the existing pavement, curbing, gutter, manholes, and other structure faces shall be thoroughly coated with a uniform coating of emulsified asphalt. All pavement removed from the work shall be transported off-site for disposal and shall not be included in the trench backfill under any circumstances.

All streets, driveways, shoulders, parking lots, or other paved surfaces damaged during the installation of District facilities shall be repaired by the Contractor. The pavement shall be of a thickness equaling or exceeding that of the existing adjacent pavement, or as otherwise directed by the District or other governing agency. Work performed in dirt roads, shoulders, or other unpaved surfaces shall be backfilled with material equal to that removed, and compacted to the level of the adjacent surface, but shall not be paved.

5.4.1.5 STRUCTURE EXCAVATION

Excavation for structures shall be made to the lines and grades shown on the approved plans. Whenever soil is encountered in the bottom of the excavation that, in the opinion of the District Representative, is incapable of adequately supporting the structure, such soil shall be removed to the depth directed and the trench backfilled and compacted to the proper grade with approved stabilization materials.

When rock is encountered in the bottom of the excavation, the rock shall be over-excavated 6 inches and backfilled and compacted to the proper grade with approved trench stabilization materials.

5.4.1.6 STABILIZATION

Sub-grades for concrete structures and trench bottoms shall be firm, dense, and thoroughly compacted and consolidated, shall be free from mud and muck, and shall be sufficiently stable to remain firm and intact under the feet of the workers.

Sub-grades for concrete structures and trench bottoms which are otherwise solid, but which become mucky on top due to construction operations shall be reinforced with crushed rock as specified for select fills. The stabilizing material shall be placed in a manner that no voids remain in the fill. All excess fill with unfilled void space shall be removed. The finished elevation of stabilized sub-grades shall not be above sub-grade elevations indicated on the Approve Documents.

5.4.1.7 ARTIFICIAL FOUNDATION IN TRENCHES

Whenever unsuitable or unstable soil conditions are encountered, trenches shall be excavated below grade and the trench bottom shall be brought to grade with suitable material as specified for select fills.

5.4.1.8 SELECT FILL

Select fill shall be defined as the material placed for stabilizing and filling over-excavated sub-grades in pipeline trenches and beneath structure foundations and slabs below any granular material layer indicated on the Approved Documents. Select fill shall be used to replace any unsuitable material below the pipeline trench and the structure foundations and slabs and to raise the site grades below and within 5 feet of the structural footprint.

Select fill shall be crushed rock and shall be per ASTM C33, No. 467, and shall meet the following gradation requirements:

Size	Percent Passing
2 inch	100
1-1/2 inch	95 – 100
3/4 inch	35 – 70
3/8 inch	10 – 30
No. 4	0 – 5

5.4.1.9 BARRICADES, LIGHTS AND FLAGPERSONS

All streets, roads, highways and other public thoroughfares closed to traffic under the authority of a proper permit shall be protected by means of effective barricades on which shall be placed acceptable warning signs. Barricades shall be located at the nearest intersecting public highway or street on each side of the blocked section of such public thoroughfare. The police and fire departments shall be informed as to the nature of the work and whether the roadway is passable. The Contractor is solely responsible for obtaining traffic control approval from the appropriate governing agency and for continual compliance with the approved plan.

All open trenches and other excavations shall be provided with suitable barriers, signs, and lights to ensure that adequate protection is provided to the public. Obstructions, such as piles of material or equipment, shall be identified with similar

warning signs and lights. All barricades, signs, warning lights and other protective devices shall be installed and maintained in conformity with the "Manual on Uniform Traffic Control Devices."

Flag persons shall be required to assist in traffic control whenever it is necessary to provide control beyond that which is possible with signs and barricades. If at any time during construction the District requests additional flag-persons, signing, or barricading to protect the traveling public, the Contractor shall promptly comply with such requests.

5.4.2 BEDDING

5.4.2.1 BEDDING FOR WATER MAINS

Water mains shall be bedded in accordance with the District's Standard Details using imported bedding material consisting of 3/8” washed pea gravel or 1/2” #7 crushed granite. Sand is not considered a permissible bedding material. Bedding material shall conform to the following gradation:

Sieve Size	Percent Passing
3/4-inch	100%
1/2-inch	90% – 100%
3/8-inch	40% – 100%
No. 4	0% – 30%
No. 8	0% – 10%
No. 16	0% – 5%

5.4.2.2 BEDDING FOR GRAVITY SEWERS

Sewer mains shall be bedded in accordance with the District's Standard Details using imported bedding material consisting of 3/8” washed pea gravel or 1/2” #7 crushed granite. Sand is not considered a permissible bedding material. Bedding material shall conform to the following gradation:

Sieve Size	Percent Passing
3/4-inch	90% – 100%
3/8-inch	20% – 55%
No. 4	0% – 10%
No. 8	0% – 5%

5.4.2.3 BEDDING OF DUCTILE IRON PIPE

The pipe shall be bedded from 6 inches under the pipe bells to the springline of the pipe with bedding material using a manual compactor to ensure the filling of voids around the pipe and continuous, compacted support under the pipe haunches. Holes shall be excavated at each bell location to ensure that the pipe and backfill loads are not concentrated on the bells.

Compacted native material shall be placed in 6-inch lifts from the pipe springline to 12 inches over the top of the pipe prior to backfilling the remaining trench depth in accordance with Sections 5.4.4 and 5.4.5.

5.4.2.4 BEDDING OF PVC PIPE

PVC pipe shall be bedded with bedding material from a minimum of 6 inches under the bottom of the pipe to 6 inches over the top of the pipe for the full width of the trench using a manual compactor to ensure the filling of voids around the pipe and continuous, compacted support under the pipe haunches.

After the pipe has been laid and the bedding approved by the District, the remainder of the trench shall be backfilled and compacted in accordance with Sections 5.4.4 and 5.4.5.

5.4.3 PIPE LAYING

5.4.3.1 HANDLING

Pipe, fittings, valves and accessories shall be loaded, unloaded, and handled in such a manner to minimize the possibility of damage prior to installation. If any material is damaged, the Contractor shall repair or replace such material as required by the District.

5.4.3.2 LINES AND GRADES

All work shall be installed to the lines, grades, and elevations shown on the plans. The Developer or Contractor shall provide surveying and grade staking for the work.

When specific grades are defined numerically on the plan and profile drawings, the pipelines shall be constructed to precisely those grades. When pipeline profiles are shown but numerical grades are not stated, the pipelines shall be constructed at the elevations shown on the profile. When no numerical grades or profiles are shown, the pipelines shall be constructed at the minimum depths as specified by these Standards.

The following tolerances establish acceptable conformance with the lines and grades shown on the plans. If the tolerances are not met, the Contractor shall be responsible for modifying the installed facilities to bring the pipelines into the required tolerances.

Description	Maximum Deviation From Approved Plan Alignment

Horizontal centerline alignment of water mains	0.25 feet
Horizontal centerline alignment of sewer mains	0.02 feet
Horizontal location of valves, fittings, hydrants, manholes and other appurtenances	0.5 feet
Vertical elevation of water main	0.2 feet
Vertical elevation of sewer main	0.02 feet

5.4.3.3 INSTALLATION OF PIPELINES IN OPEN TRENCHES

5.4.3.3.a General

All pipe and fittings shall be carefully examined for cracks and other defects immediately before installation. Proper implements, tools and facilities shall be provided and used by the Contractor for the safe and convenient performance of the work. All pipe, fittings, and appurtenances shall be carefully lowered into the trench piece by piece by means of an excavator, ropes or other suitable equipment in such manner as to prevent damage to the pipe and its protective coatings and linings. Under no circumstances shall materials be dropped or dumped into the trench.

Every precaution shall be taken to prevent foreign material from entering the pipe while it is being placed. If the pipe laying crew is unable to install the pipe in place without allowing debris to enter, the District may require that before lowering the pipe into the trench, a temporary plug or heavy, tightly woven canvas bag of suitable size shall be placed over each end and left there until the connection is made to the adjacent pipe. During laying operations, no debris, tools, clothing or other materials shall be placed in the pipe.

As each length of pipe is placed in the trench, the spigot end shall be centered in the bell and brought to correct line and grade. The pipe shall be secured in place with approved bedding materials.

At times when pipe laying is not in progress, all open pipe ends shall be closed by a watertight plug or other means. If water is in the trench, the plug shall remain in place until the trench is pumped completely dry. No pipe shall be laid when trench conditions are unsuitable.

The cutting of pipe for inserting valves, fittings or closure pieces shall be done in a manner without damage to the pipe so as to leave a smooth end perpendicular to the axis of the pipe. Flame cutting of pipe by means of an oxyacetylene torch is not allowed. Field-cut pipe lengths shall be filed or ground to resemble the spigot end of the manufactured pipe. When ductile iron pipe is to be cut in the field, the pipe to be cut shall be ordered as “GAUGED FULL LENGTH,” and shall be specially marked to avoid confusion. After cutting, the cut end of the pipe shall be field gauged to determine if it is within acceptable tolerances prior to assembling the joint. All assembly instructions provided by the pipe manufacturer shall be complied with.

The laying of sewer pipe shall be commenced at the lowest point with the spigot ends pointing in the direction of the flow. All pipe and fittings shall be laid with ends abutting. They shall be carefully centered so that when laid, they will form a line with a uniform invert. Blocking under the pipe shall not be used except in connection with concrete cradles or encasements.
Potable and irrigation water main depths may in many cases be deeper than the required minimum cover to provide continuous air release or to avoid existing or future utilities. Consequently, portions of the irrigation system may be designed and installed at depths greater than 5.5 feet in order to provide the required clearance at crossings with the potable mains, thereby avoiding lowerings on the irrigation mains at these locations. The Contractor shall provide grade stakes by which the grade of the pipe shall be established to conform to the Approved Documents.

Wherever it is necessary to join ductile iron pipe with a pipe of dissimilar metal, a method of insulating against the passage of electrical current shall be approved by the District and incorporated into the work.

5.4.3.3.b Protection of Potable Water Mains and Service Lines

Sanitary sewer mains and manholes, storm sewer mains and manholes, and irrigation water mains shall be laid at least 10 feet horizontally from any potable water main measured edge to edge.

Potable water mains shall cross above or below building sewers, sanitary sewer mains, storm sewers, irrigation mains, gas mains, and other utilities with a clear separation of at least 18 inches. When a new sanitary sewer crosses above or below an existing potable water main with less than 18 inches of clearance between pipes, the sewer shall be constructed in accordance with the District's Standard Details.

The upgraded sanitary sewer pipe shall be a minimum of 14 feet long and centered with respect to the potable water main., Where a sanitary sewer is crossing under a water line with less than 18 inches of clearance, the sanitary sewer shall be backfilled with bedding material or “flash fill” from the top of the sewer pipe bedding

to the centerline of the water line as shown in the Standard Details. Where a sanitary sewer is crossing over a water line with less than 18 inches of clearance, the water line shall be backfilled with bedding material or “flash fill” from the centerline of the water line to the bottom of the sanitary sewer per the Standard Details.

When a new water or sanitary sewer main crosses under any existing water or sanitary sewer main with at least 18 inches of clearance, compacted pipe bedding material (3/8” washed pea gravel) shall be placed under the existing pipeline and shall extend to a point 6 inches over the top of the existing pipe.

In certain circumstances at a crossing of a new main with an existing main, the District may require the Contractor to remove a section of existing water or sewer main at a crossing with a new water or sewer main and replace it with new materials if the existing main is deemed to be structurally inadequate.

Potable water mains shall be located in steel casing pipe where the main crosses under a storm sewer or other utility that is 30-inches or larger in diameter.

Potable water service lines and meters shall be located such that a horizontal clearance of at least 10 feet exists to any other utility or service line up to the structure or dwelling being served. Likewise, no new utility or service line shall be installed within 10 feet of an existing potable water service line. Potable water service lines shall cross above irrigation mains with a minimum vertical clearance of 12 inches. Irrigation service lines shall cross beneath potable water mains with a minimum vertical clearance of 12 inches.

5.4.3.3.c Protection of Irrigation Water Mains and Service Lines

Irrigation mains shall be installed at a minimum horizontal separation of 10 feet from potable water mains measured edge to edge, and at a horizontal separation of 5 feet from sanitary mains and storm sewers.

In areas where irrigation mains cross potable water mains, the irrigation mains shall be installed below the potable water mains at a minimum vertical clearance of 18 inches. In areas where irrigation mains cross sanitary sewers, storm sewers, gas mains, and other utilities, a minimum vertical clearance of 18 inches shall be maintained between crossing utilities. If conditions prevent 18 inches of vertical clearance where a new sanitary sewer main crosses an existing irrigation water main, modifications to the sanitary sewer main shall be as specified in the District’s Standard Details and as described in Section 5.4.3.3.b. or as otherwise approved by the District.

Irrigation water mains shall be located in steel casing pipe where the main crosses under a storm sewer or other utility that is 30-inches or larger in diameter.

Irrigation service lines shall be installed at a minimum horizontal separation of 10 feet from potable water services, and 5 feet from sanitary sewer services. Service line separations shall be maintained up to a point within 5 feet from the structure or dwelling being served. As stated in Section 5.4.3.3.b, irrigation service lines shall cross beneath potable water mains with a minimum vertical clearance of 12 inches, and potable water service lines shall cross above irrigation mains with a minimum vertical clearance of 12 inches.

5.4.3.3.d Installation of Potable and Irrigation Water Mains, Sanitary Sewer Force Mains and Facilities

5.4.3.3.d(1) Push-on Joint Ductile Iron and PVC Pipe

The inside of the bell, the outside of the spigot end, and the gasket shall be thoroughly cleaned to remove oil, grit, excess coating and other foreign matter, taking care not to leave any residue or introduce any dirt or bacteria into the pipe. The circular gasket shall be flexed inward and inserted in the gasket recess of the bell socket.

A thin film of gasket lubricant shall be applied to either the inside surface of the gasket or the spigot end of the pipe or both. Gasket lubricant shall be as supplied by the pipe manufacturer and shall meet current water industry standards. The spigot end of the pipe shall be entered into the socket with care to keep the spigot end from contacting the ground. The joint shall be kept straight while the spigot end is pushed into the bell using standard means and methods.

Per manufacturer recommendation, pipe shall be installed such that the depth mark lines up with the bell face and does not proceed further. In cases where the pipe is inserted past the depth mark, the pipe shall be removed and replaced.

Maximum allowable deflection of push-on joint ductile iron pipe shall be as specified in ANSI/AWWA C600. No horizontal or vertical deflections will be allowed when using PVC pipe, as noted in Section 2.3.1 of these standards.

5.4.3.3.d(2) Mechanical Joint Ductile Iron Pipe

The last 8 inches of the outside surface of the spigot end of the pipe and the inside of the adjacent mechanical joint bell shall be thoroughly cleaned to remove oil, grit, excess coating and other foreign matter from the joint. The iron gland shall then be slipped on the spigot end of the pipe with the lip extension of the gland toward the socket or bell end. The rubber gasket shall be placed on the spigot end with the thick edge toward the gland.

The entire section of the pipe shall be pushed forward to seat the spigot end in the bell. The gasket shall then be pressed into place within the bell and the iron gland shall be moved along the pipe into position for bolting. All of the bolts shall be

inserted and the nuts screwed up finger-tight. All nuts shall then be tightened with a torque-limiting wrench.

The torque for various sizes of bolts shall be as follows:

Size (inches)	Range of Torque (foot–pounds)
5/8	40-60
3/4	69-90
1	70-100
1-1/4	90-120

Nuts spaced 180 degrees apart shall be tightened alternately in order to produce an equal pressure on all parts of the gland. Maximum allowable deflection of mechanical joint pipe shall be as specified in ANSI/AWWA C600.

5.4.3.3.d(3) Fittings

Fittings, valves and plugs shall be set and joined to pipe in the manner previously specified in these Standards for cleaning, laying and joining pipe. Fittings and valves shall be installed where shown on the approved plans. Valves shall have the interior cleaned of all foreign matter before installation. Valves shall be inspected in open and closed positions to ensure that all parts are in working condition and are open left operation. When valves are opened they should be fully opened and then screwed back down ½ to 1 full turn.

Fittings shall be installed per manufactures recommendation using standard means and methods.

5.4.3.3.d(4) Valves and Valve Boxes

Buried valves shall rest on a minimum 6-inch thick layer of bedding material and shall be furnished with valve boxes, covers, and lids in accordance with the District's Standard Details. Once installed, the valve box shall not transmit shock or stress to the valve and shall be centered and plumb over the operating nut of the valve such that the valve box cover is ¼” below road and at grade non paved areas, or such other level as directed by the District. Valves shall not be installed between the upper two vertical bends of a water line lowering configuration as stipulated in the Standard Details.

5.4.3.3.d(5) Fire Hydrants

Fire hydrants shall be installed at locations shown on the plans as approved by the fire authority. Prior to final connection to the main, all fire hydrants shall be thoroughly cleaned of foreign matter and checked for proper working order. All valves and hydrants shall be left in the fully open position. Fire hydrants shall be

set to proper elevation as shown in the Standard Details, and plumb with the hose nozzles parallel to the roadway and with the pumper nozzle facing the roadway. The fire hydrant shall be connected to the main with a 6-inch ductile iron pipe branch controlled by an independent 6-inch gate valve. Fire hydrant runs shall be restrained between the water main and hydrant with both thrust blocks and restrained joints, as shown on the Standard Details.

In areas where detached sidewalks exist, or are planned to exist, the fire hydrant shall be centered within the tree lawn, equidistant between the street edge of the sidewalk and the back of the curb and gutter. Where attached walks exist, or are planned to exist, 3 feet shall be provided between the pumper nozzle and the back edge of the walk. Failure by the Contractor to install fire hydrants at the appropriate locations and elevations relative to the final positions of streets and sidewalks will require the resetting of such fire hydrants by the Contractor.

Fire hydrants shall be installed with care to ensure that hydrant drains are not obstructed by the thrust block or other foreign material. Fire hydrant drainage shall be facilitated by providing a drainage pit 2 feet in diameter and 3 feet deep below the hydrant that shall be filled up to a level 6 inches above the waste opening with 3/4-inch crushed rock drainage material that shall be compacted under and around the foot of the fire hydrant. A plastic sheet shall be laid over the drainage material and taped around the fire hydrant barrel above the weep holes to minimize the infiltration of native material into the drainage pit.

5.4.3.3.d(6) Joint Restraint

Tees, dead-ends, and bends of 11-1/4 degrees or greater shall have all necessary push-on or mechanical joints restrained in accordance with the District's Standard Details to prevent joint separation. Such joint restraint shall be provided by use of both constructing concrete thrust blocks and by restraining joints. In-line valves shall be restrained in each direction from the valve per the District's Standard Details. Thrust blocks shall be of the sizes shown on the District's Standard Details and shall be placed between the solid ground of the trench wall and the fitting in a manner that will ensure that the pipe and fitting joints remain accessible for repair. All thrust blocks shall be constructed of poured-in-place concrete. Fittings against which concrete will be poured shall be covered with plastic wrapping to prevent the concrete from bonding to the pipe. Under no conditions shall concrete be allowed to come into contact with fitting bolts or gaskets. Plywood, boards, or polyethylene wrapping shall be employed as necessary to protect the bolts and gaskets associated with the fittings.

5.4.3.3.d(7) Manholes for Air Release Valves

Manholes used for air release valves shall be set upon two precast concrete rails in accordance with the District's Standard Details, and shall be located on each side of, and parallel to a horizontal section of water main at the high point. The

slabs shall rest on a minimum 6-inch thick layer of 3/4-inch crushed rock extending down to at least the base of the pipe, and shall be set in order to allow support of the entire manhole load, including traffic, without transferring any load to the pipe.

All manhole covers shall be elevated above the pre-cast concrete sections using pre-cast concrete adjustment collars. Where required, one cast iron adjustment ring (riser) may also be used as a final adjustment for the manhole cover.

5.4.3.3.d(8) Tracer Wire

Tracer wire shall be installed on all water mains, hydrant laterals, fire lines, water service lines, and sewer service laterals, and force mains, regardless of the pipe material used. Appropriately color coded (blue for potable water, purple for irrigation water, and green for sanitary sewer) wires shall be attached to the pipes with 2-inch wide PVC tape at 5-foot intervals along the pipe.

Tracer wire installed along service lines shall be spliced into the wire installed along the mains and shall be extended into the meter pit where the ends are to be terminated by wrapping the wire three times around the meter setter cross-brace.

Tracer wire installed along sanitary sewer service lines shall be spliced into the wire installed along the mains and shall be extended into a separately installed tracer wire box where the ends are to be terminated.

Access to tracer wire along distribution mains shall be provided in test station boxes installed behind each fire hydrant. Hydrant lateral wires shall be spliced into the wires along the mains and shall be securely attached to the test box lid terminals for easy access when the lid is opened. Tracer wires shall not be terminated in valve boxes.

At connections to existing iron pipe where tracer wire does not exist, tracer wire shall be cad welded onto the existing iron pipe. A grounding anode rod shall also be spliced onto the tracer wire and buried next to the connection to the iron pipe. If tracer wire does exist, the new tracer wire shall be spliced into the existing tracer wire.

Care shall be taken during backfilling and compaction to ensure that tracer wires are not broken or displaced from the pipe. Under the supervision of the District, tests shall be made by the Contractor at the completion of construction to ensure that the tracer wires carry a continuous current between all access points.

5.4.3.3.d(9) Electronic Marking Systems

Electronic marking system devices (ball or full range type) may be required in addition to tracer wire for locating purposes and shall be placed to mark all of the following features of potable and irrigation water lines or gravity sewer and force

mains: vertical and horizontal mechanical joint bends, and casing pipe ends as required by the District.

5.4.3.3.d(10) Installation of Potable Single-Family Residential Service Lines

Service lines and appurtenances shall be constructed by the Contractor in accordance with the District's Standard Details. Service line stub-outs shall be extended 4 feet beyond the back edge of the meter pit in areas where the sidewalks are attached, and 4 feet beyond the back edge of sidewalk where the walks are detached from the curb and gutter. A single compression-type coupling shall connect the stub-out to the service line connection to the building. The service line beyond the stub-out shall be continuous, without additional splices or fittings beyond the coupling.

Prior to backfill, the service line trench from the main to the building shall be filled with bedding material and minimum depth of 6 inches below to 6 inches over the top of the line. In the event the work is covered prior to inspection by the District, it shall be uncovered by the Contractor to allow inspection.

5.4.3.3.d(11) Installation of Irrigation Single-Family Residential Service Lines

Irrigation service lines and appurtenances shall be constructed by the Contractor in accordance with the District's Standard Details. Service line stub-outs shall be extended from the meter pit to the location of the stop-and-waste valve for both attached and detached sidewalk conditions. The service line beyond the stop-and-waste valve to the vertical transition, if needed, shall be continuous, without additional splices or fittings in between.

Prior to backfill, the trench shall be filled with bedding material a minimum depth of 6 inches below to 6 inches over the top of the service line for the entire distance between the main and the vertical 90-degree fitting. In the event the work is covered prior to inspection by the District, it shall be uncovered by the Contractor to allow inspection.

The stop-and-waste valve and valve box shall rest on a minimum 12-inch thick and 12-inch diameter bed of 3/4-inch crushed rock drainage material. Valve key extensions shall be furnished with the stop-and-waste valve and shall extend no more than 3 inches below the valve box cover per the District's Standard Details.

5.4.3.3.d(12) Installation of Potable Single-Family Residential Meter Pits

Meter pits shall be constructed and located in accordance with the District’s Standard Details. In detached sidewalk areas, the meter pit shall be centered within the tree lawn, equidistant between the street-side edge of the sidewalk and the back of the curb and gutter. The center of the meter pits shall be set a minimum of ~~3~~ 2 feet from the property lines and the edge of driveways. In attached walk

areas, the center of the meter pit shall be 3 feet from the back of the walk. Meter pits shall be set such that the final elevation of the lid is one inch above finished grade. Rock will not be allowed in potable service meter pits.

Failure by the Developer/Contractor to install meter pits at the appropriate locations and elevations relative to the final positions of streets and sidewalks will result in the resetting of such meter pits by the Developer/Contractor.

Upon specific direction by the District, up to five potable service meters for single-family attached dwellings and multi-family townhouses shall be constructed in accordance with the District's Standard Detail for multi-setter meter manholes.

5.4.3.3.d(13) Installation of Irrigation Single-Family Residential Meter Pits

Meter pit requirements and locations for service lines up to 1-inch shall conform to the requirements established for potable water meter pits. Failure by the Developer/Contractor to install meter pits at the appropriate locations and elevations relative to the final positions of streets and sidewalks will result in the resetting of such meter pits by the Developer/Contractor.

In accordance with the District's Standard Details, a 1-inch diameter hole shall be provided in the side of 5/8-inch and 3/4-inch meter pits to accommodate the horizontal run of service line leaving the pit downstream from the meter. A 1-1/4 to 1-1/2 inch hole shall be provided in the wall of 1-inch meter pits. Holes shall be sealed around the pipe with spray foam insulation.

5.4.3.3.d(14) Installation of Potable Service Lines and Meter Facilities for Non Single-Family Residential Applications

The installation of non-SFR service lines and meter facilities shall be in accordance with the layout information provided in Section 2.5. Prior to backfill, the service line trench from the main to the meter shall be filled with bedding material a depth of at least 6 inches below to 6 inches over the top of the line. In the event the work is covered prior to inspection by the District, it shall be uncovered by the Contractor to allow inspection.

5.4.3.3.d(15) Installation of Irrigation Service Lines and Meter Facilities for Non Single-Family Residential Applications

The installation of non-SFR service lines and meter facilities shall be in accordance with the layout information provided in Section 4.6. Prior to backfill, the service line trench shall be filled with bedding material a minimum depth of 6 inches below to 6 inches over the top of the line between the main and the meter. In the event the work is covered prior to inspection by the District, it shall be uncovered by the Contractor to allow inspection.

5.4.3.3.e Installation of Sewers and Facilities

5.4.3.3.e(1) Bell and Spigot Joint Sewer Pipe

The inside of the bell, the outside of the spigot end, and the gasket shall be thoroughly cleaned to remove oil, grit, excess coating, and other foreign matter, taking care not to leave any residue or introduce any dirt or bacteria into the pipe. The circular gasket shall be flexed inward and inserted in the gasket recess of the bell socket.

A thin film of gasket lubricant shall be applied to either the inside surface of the gasket or the spigot end of the pipe or both. Gasket lubricant shall be as supplied by the pipe manufacturer and shall meet current potable water industry standards. The spigot end of the pipe shall be entered into the socket with care to keep the spigot end from contacting the ground. The joint shall be kept straight while the spigot end is pushed into the bell. Contractor shall follow manufactures recommendation and standard means and methods during the installation of sanitary sewer pipelines. Pipe not furnished with a depth mark shall be rejected by the District.

Per manufacturer recommendation, pipe shall be installed such that the depth mark lines up with the bell face and does not proceed further. In cases where the pipe is inserted past the depth mark, the pipe shall be removed and replaced.

5.4.3.3.e(2) Manholes

Pre-cast concrete manhole bases shall be set on a minimum 6-inch deep layer of bedding material as specified for pipe bedding. Invert channels shall be cast monolithically with the manhole base unless otherwise approved. Invert channels shall have a minimum slope equal to mildest slope of any pipe coming into or going out of that manhole. Side branches shall be connected with as large a radius of curve as is practicable. All inverts shall have a smooth clean surface.

There shall be a full bitumastic joint between all adjoining concrete riser and cone sections with two rows of flexible bitumastic material. All manhole barrel sections shall be joined by a minimum of 8 inches wide of flexible mastic gasket material (i.e. Conwrap) to minimize or eliminate inflow and infiltration into to the sanitary sewer system. Pre-cast concrete adjustment collars, mortared in place, shall be used on top of the precast cone to support the manhole frame at final grade. The outside of the concrete rings shall be covered with bitumastic joint sealant covering the joints. Where required, no more than one cast iron adjustment ring (riser) may be used as a final adjustment for the manhole cover.

5.4.3.3.e(3) Connection of Building Sewers to Public Sewers

5.4.3.3.e(3)(a) General

The minimum sewer service line shall be 4-inch diameter. Sewer services that are 4-inch or 6-inch in size shall be connected to the sewer via a service wye fitting or saddle as described below. Sewer service connections for lines larger than 6-inch shall be approved by the District on a case by case basis.

The District's representative shall visually inspect the sewer and saddle for each tap prior to any backfilling.

In all new sewers, service wyes shall be installed in the sewers to facilitate connection of new or existing services. Wyes to which services are not immediately connected shall be securely plugged with a compression type fitting compatible with the type of material used for the sewer.

Where service lines and sewers are of different materials, an approved coupling as indicated on the Approved Materials List shall be used to make the connection.

5.4.3.3.e(3)(b) Vitrified Clay Pipe

Where clay pipe is to be tapped, the opening in the sewer main shall be made by a mechanical tapping machine that cuts a smooth hole compatible for attaching a tee saddle. The coupon cut-out must be removed before the saddle is attached. The tapping machine shall be in conformance with the manufacturer's recommendation for tapping vitrified clay pipe.

All materials shall be in accordance with the District's Approved Construction Materials List.

5.4.3.3.e(3)(c) ABS (Acrylonitrile-Butadiene-Styrene) Truss Pipe

Where ABS truss pipe is to be tapped, the opening in the sewer main shall be constructed in conformance with the manufacturer's recommendation for tapping ABS truss pipe. The exposed concrete in the cut area shall be sealed using joint cement.

5.4.3.3.e(3)(d) PVC Pipe

Where PVC pipe is to be tapped, a round hole in the sewer main shall be cut with a saber or keyhole saw. The lateral connection may be made by method A or B as described below.

- Method A. A tee saddle shall be positioned on the pipe using quick setting epoxy cement. The saddle shall then be clamped with two stainless steel bands and bolts.

- Method B. An ABS "Quick Fit" sewer tap saddle as manufactured by the Predco Company shall be connected to the main using quick setting epoxy cement. Connection between the saddle and service line shall be made using a Fernco "Donut", or approved equal.

5.4.3.3.e(3)(e) Concrete Pipe

Where concrete pipe is to be tapped, the pipe shall be tapped in conformance with the manufacturer's recommendation.

5.4.3.3.e(3)(f) Section Deleted

5.4.3.3.e(3)(g) Polyethylene Pipe

Specific permission shall be obtained from the District before tapping polyethylene sewers.

5.4.3.3.e(4) Groundwater Barrier

Continuity of embedment material shall be interrupted by low permeability groundwater barriers or trench plugs to impede the passage of water through the embedment. Groundwater barriers for force mains and gravity sewer lines shall be compacted soil around the pipe meeting soil classification GC, SC, CL, or ML-CL, compacted to 95 percent of maximum density. Material may be select job excavated material that is finely divided and free from stones, organic matter, and debris.

Groundwater barriers shall be installed at a minimum 400 feet center-to-center spacing along the pipeline, where specifically identified on the drawings, and at locations as directed by the Engineer. Barriers shall be installed in place of pipeline embedment material and shall be a minimum of 2 feet wide as measured along the pipe, shall span the full width of the trench perpendicular to the pipe, and extend a minimum of 12 inches above the pipe embedment.

5.4.3.3.f Abandonment of Sewer Facilities

Where existing sewer services are required to be abandoned, the service must be abandoned at the sewer main. If the service is connected to the main with a saddle or a tee/wye fitting, the abandonment shall be accomplished by installation of a plug directly into the saddle or fitting. If the service is directly connected into the main without use of a saddle or fitting, the abandonment shall be accomplished by removing a section of the sewer main surrounding the service connection and installing a solid piece of SDR-35 or other pipe material as required by the District to replace it. The new section of pipe shall be connected to the existing sewer main with approved construction materials to prevent settling of the replacement section.

Abandonment of sewer mains shall include flashfilling the main at point of disconnection. Abandonment of sewer man holes shall include removing the barrel sections, backfilling with suitable material, and ensuring compaction is obtained.

5.4.3.4 PIPE BORING

5.4.3.4.a Contractor's Qualifications

The Contractor must be fully equipped and experienced in the installation of bored and jacked pipe. As evidence of its experience in this type of work, the Contractor shall submit to the District specific information regarding the successful installation by its company of at least four similar structures under similar load and ground conditions. Lack of such experience shall be sufficient cause to disqualify any Contractor.

5.4.3.4.b Casing Pipe

Casing pipe shall be smooth-walled, non-coated pipe of welded steel construction conforming to ANSI/AWWA C200, and shall be seamless or straight seam pipe constructed of steel with a minimum yield strength of 35,000 psi. The pipe shall be constructed of new material and have a minimum wall thickness as follows unless otherwise required on the approved plans:

CARRIER PIPE NOMINAL DIA.	CASING PIPE	
	MIN. O.D.	MIN. WALL THICKNESS
4"	12"	0.250"
6"	16"	0.3125"
8"	20"	0.3125"
12"	24"	0.375"
15-20"	30"	0.500"
24"	36"	0.562"

Casing pipe strength, type, and wall thicknesses shall comply with all requirements of the entities whose properties or facilities are being bored under.

5.4.3.4.c Preliminary Borings

The Contractor shall be responsible for making any preliminary borings to determine the nature of the soil to be encountered. The Contractor shall be

responsible for the means and methods of the pipe boring and casing installation based on the information obtained from the preliminary borings and site conditions.

5.4.3.4.d Boring Pit

The boring pit shall be large enough to provide adequate room for the boring operation. The sides of the boring pit shall be supported in such a manner as to prevent any movement or collapse of earth during boring operations. Bracing, shoring, sheeting or other supports shall be installed as needed. The bottom of the pit shall provide unyielding support for the boring equipment and pipe. Provisions shall be made for adequate drainage before boring begins and maintained during the entire boring process. The Contractor shall be responsible for all necessary dewatering of the boring pit and surrounding area.

5.4.3.4.e Boring Machines

The Contractor shall use the type of machine that does not allow more than approximately one foot of excavation ahead of the lead pipe. The excavation around the pipe shall be cut accurately to line and grade and as reasonably close to the outside diameter of the pipe as possible. If voids are formed outside the casing pipe, the Contractor shall be responsible for filling the voids by pumping grout into the voids.

5.4.3.4.f Staking

The Contractor shall provide offset line and grade stakes on the adjacent ground surface that reference the boring bit. It shall be the Contractor’s responsibility to transfer this information to the bottom of the pit and to the boring machine itself.

5.4.3.4.g Allowable Tolerances

The line shall be bored such that the casing centerline in its installed position differs from the approved design centerline by no more than 0.3 feet per 100 feet of length for water lines. The horizontal and vertical tolerances specified for sewer lines in Section 5.4.3.2 shall be followed here as well. The Contractor shall check line and grade continuously to ensure compliance with the approved plans. The Contractor shall be responsible for correcting out of tolerance work.

5.4.3.4.h Pipe Spacers (Casing Insulators)

The carrier pipe shall be push-installed using methods acceptable to the District. The barrel of the pipe shall be supported on stainless steel or synthetic casing spacers that center the pipe within the casing and allow the carrier pipe to slide into the casing without undue stress being applied to the carrier pipe. Distances between spacers shall be in accordance with the manufacturer's recommendations.

5.4.3.4.i Restrained Joint Pipe Through Casing

Where plans call for restrained joint pipe through casing sections, pipe spacers shall be restrained per the District's Approved Material List.. The District may approve, as an alternative approach, the use of high strength steel harness lugs welded to each end of the casing and connected to restraining devices on the pipe with tie rods. The specific detailing of such an approach shall be submitted to the District for review.

5.4.3.4.j End Plugs

Casing ends shall be completely sealed off around the carrier pipe with seamless neoprene rubber boot-type end seals in order to prevent the migration of water and earth into the casing pipe. The end seals shall be secured to the casing and carrier pipes with stainless steel banding clamps with worm gearing. End seals shall be carefully backfilled with bedding material to ensure that the end seal is not dislodged while backfilling.

5.4.3.4.k Section Deleted

5.4.3.4.l Directionally Drilled Pipe

Installation of pipelines using directional drill methods will be considered by the District on a case by case basis.

5.4.4 BACKFILL

Backfill material shall consist of the excavated material, free from large clods or stones over 3 inches in diameter, broken asphalt, or frozen earth. Backfill material shall consist of select imported material where the excavated material is unsuitable in the opinion of the District. Select imported material is defined as a well graded mixture of sound mineral aggregate particles containing sufficient quality binding material to secure a firm, stable foundation when placed and compacted. The material shall meet the following gradation requirements:

Sieve Size	Total Percent Passing by Weight
2 inch	95%-100%
No. 4	30%-60%
No. 200	0%-20%

When used beneath pavements or similar surfaces, this material shall not extend above subgrade level. Materials used above the subgrade level shall conform to the requirements for sub-base and base course materials as specified by Adams County, Commerce City, CDOT, or any other governing entity having jurisdiction.

5.4.5 COMPACTION

5.4.5.1 Compaction Requirement

Compaction of backfill material shall comply with the requirements of the governmental entity having jurisdiction. Backfill in trenches beneath pavements, road shoulders or driveways shall be compacted to 95% of the maximum density at optimum moisture as determined by AASHTO T99 (Standard Proctor). Backfill in trenches which are not beneath pavements or road shoulders shall be compacted to 100% of the dry density of the undisturbed soil adjacent to the trench and beneath any topsoil, or to 90% of maximum density at optimum moisture as determined by AASHTO T99. The in-place density of compacted backfill shall be measured by the Sand Cone Method (ASTM D-1556), or the Nuclear Density Method (ASTM D-3017 for moisture content and ASTM D-2922 for density).

5.4.5.2 Compaction Procedure

After the bedding has been placed and approved by the District, the remainder of the trench above the bedding shall be backfilled according to the requirements of Section 5.4.4, and local jurisdiction specifications, and compacted by tamping, vibration, or any combination of procedures necessary to conform with the density requirements as specified herein.

5.4.5.3 Compaction Tests

Compaction tests shall be the responsibility of the Developer or Contractor and shall be in accordance with the agency having jurisdiction over the right-of-way in which the construction is performed. Documentation of all compaction tests shall be provided to the agency and to the District.

When construction is on District property or within District easements, the District will require compaction tests at intervals of approximately one test every 250 feet of constructed line or at other intervals requested at the discretion of the District. Additional testing may be required around valves, manholes, meter pits and vaults. Documentation of all tests shall be provided to the District. Proof of compaction to 95% of AASHTO T99 must be submitted to Adams County, Commerce City, CDOT, or any other governing entity having jurisdiction prior to acceptance of a street cut.

The Developer or Contractor shall be responsible for coordinating, obtaining, and paying for all compaction testing.

5.4.5.4 Unsuitable Backfill Material

Where existing materials cannot be compacted to the required densities, other suitable material as approved by the District shall be used for backfill. The costs and responsibility associated with obtaining, transporting, placing, and compacting this material shall be the sole responsibility of the Developer or Contractor.

5.4.5.4.a Flashfill

Where specified clearances cannot be achieved when constructing a sewer line above or beneath an existing water or irrigation line and where crushed rock bedding is not deemed by the District to be sufficient for backfill between the utilities, flowable backfill material commonly referred to as “flashfill” may be used between the sewer and water line in accordance with the District’s Standard Details. The District also reserves the right to require “flashfill” in other water and sewer excavations where it is deemed that standard backfill materials are not sufficient for proper compaction around the utilities. Flashfill shall not be placed in contact with PVC pipe due to heat of hydration. A minimum of 6 inches of bedding material is required between PVC pipe and flashfill.

“Flashfill” shall consist of a mixture of Class C Fly Ash, Class F Fly Ash, and water and shall have a minimum 28-day compressive strength of 150 psi and a maximum 28-compressive strength of 350 psi. Flashfill shall have minimum slump of 8 inches, and a minimum air content for resistance to frost heave of 15% when tested in accordance with ASTM C231. A mix design shall be submitted to the District for approval prior to use.

Backfill material commonly referred to as “flowfill” shall be strictly prohibited for use in all backfill applications directly surrounding water and sewer lines.

5.5 INSPECTION AND TESTING OF MAINS

5.5.1 WATER MAINS

5.5.1.1 GENERAL

The Contractor shall ensure that all water main materials have been inspected by the District to the District’s satisfaction prior to backfilling. In the event the work is covered prior to inspection by the District, it shall be uncovered by the Contractor to allow inspection. All pipes, fittings, valves, hydrants and joints shall be carefully examined and any defective materials removed and replaced with sound material at the Contractor’s expense.

Pressure, leakage, and disinfection testing shall be conducted after the trench has been backfilled and compacted in accordance with the District's Design and Construction Standards. Testing shall be completed under the observation of the District and all equipment and personnel necessary to perform the required tests shall be furnished and paid for by the Contractor.

5.5.1.2 TESTING PROCEDURES

5.5.1.2.a Pressure Testing

After all pipe has been installed and the trench completely backfilled, the pipe shall be slowly filled with water and all air expelled from the pipe. If hydrants or blow-offs are not available at high points, the Contractor shall make the necessary taps at high points to expel the air and insert plugs after the air is expelled. The hydrostatic test pressure shall be 150 psi at the highest point in the line or section being tested and shall be maintained per the requirements set forth in Section 5.5.1.2.b. Pressure shall be applied in a manner satisfactory to the District with all testing apparatus furnished by the Contractor. Pressure tests shall be repeated until minimum testing standards are achieved.

All exposed pipe, fittings, valves, hydrants and joints shall be carefully examined while the pipe is pressurized. Any cracked or defective materials shall be removed and replaced with sound material and any leaks shall be corrected.

5.5.1.2.b Leakage Testing

A leakage test shall be performed in accordance with ANSI/AWWA C600 for ductile iron pipe and ANSI/AWWA C605 for PVC pipe. The duration of each leakage test shall be two hours, during which the main shall be subjected to a hydrostatic test pressure of 150 psi at the highest point in the main. The test pressure shall not vary by more than 5 psi for the duration of the test. The Contractor shall furnish all test apparatus, including functional water meter and pressure gauges, and shall conduct the test with the District sufficiently notified so that a representative may observe the test. No pipe installation will be accepted until the leakage is less than that computed by the following equation:

$$L = \frac{SD(P)^{1/2}}{148{,}000}$$

where: L = the maximum allowable leakage in gallons per hour
S = the length of pipe tested in feet
D = the nominal pipe diameter in inches
P = the average gage pressure, in pounds per square inch, applied to the line being tested

5.5.1.2.c Tracer Wire Testing

A tracer wire test shall be constructed to ensure that a continuous, traceable current exists along the entire length of the tracer wire installed. All interruptions in the current shall be repaired by the Contractor prior to acceptance by the District.

5.5.1.2.d Electronic Marking System Testing

In addition to the tracer wire test, a test shall be conducted for the electronic marking system devices to ensure their functionality. All devices that are not functioning correctly shall be repaired by the Contractor prior to acceptance by the District.

5.5.1.3.a. POTABLE WATER SYSTEM DISINFECTION

If chlorine tablets were placed in each length of pipe as the main was laid, flushing shall be done after the high chlorine testing has been completed and approved by the District. The potable water main shall be flushed prior to bacteriological test as thoroughly as possible through the water pressure and outlets available.

Chlorination of the potable water mains shall be performed in accordance with ANSI/AWWA C651 to achieve a minimum concentration of 100 milligrams per liter. In the process of chlorinating newly laid pipe, all valves, fire hydrants, and other appurtenances shall be operated while the pipeline is filled with the chlorinating agent to ensure that high chlorine contact is made with all internal surfaces.

Within 24 hours after passing the chlorination test, all treated water shall be thoroughly flushed from the pipeline at its extremities until replacement water exists throughout its entire length. After final flushing and before the water main is placed in service, samples shall be collected by the District from the main and shall be tested for bacteriological quality in accordance with ANSI/AWWA C651 Disinfection of Water Mains most current version. The preferred testing method by the District states as follows from ANSI/AWWA C651:

Option B: Before approving a main for release, let it sit for a minimum of 16 hours without any water use. Then collect, using the sampling site procedures outlined and without flushing the main, two sets of samples a minimum of 15 minutes apart while the sampling taps are left running. Both sets of samples must pass bacteriological tests for the main to be approve prior to putting the water line in service.

Discharge of chlorinated water from water distribution facilities to waters of the state shall follow "Best Management Practices" (BMP’s) established by the Colorado Department of Public Health and Environment (CDPHE).

A set of samples includes all samples collected along the length of the pipeline, as described in Section 5.1.1.2 of ANSI/AWWA C651.

For new mains, sets of bacteriological samples shall be collected every 1,200 ft of the new water main plus one at the end of the line and at least one from each branch greater than one pipe length.

Tests shall show the absence of coliform organisms. The water main, or portion thereof as represented by the test sample, shall not be accepted if the presence of coliform bacteria is detected and/or a standard heterotophic plate count (HPC) test is greater than 500 CFU/ml.

5.5.1.3.b. IRRIGATION WATER SYSTEM DISINFECTION

If chlorine tablets were placed in each length of pipe as the main was laid, flushing shall be done after the high chlorine testing has been completed and approved by the District.

Chlorination of the irrigation water mains shall be performed in accordance with ANSI/AWWA C651 to achieve a minimum concentration of 100 milligrams per liter. In the process of chlorinating newly laid pipe, all valves, flushing hydrants, and other appurtenances shall be operated while the pipeline is filled with the chlorinating agent to ensure that high chlorine contact is made with all internal surfaces.

Within 24 hours after passing the chlorination test, all treated water shall be thoroughly flushed from the pipeline at its extremities until replacement water exists throughout its entire length.

Any irrigation system that is interconnected with the potable water system shall be required to pass the bacteriological test as described in Section **5.5.1.3.a.**

Discharge of chlorinated water from water distribution facilities to waters of the state shall follow "Best Management Practices" (BMP's) established by the Colorado Department of Public Health and Environment (CDPHE).

5.5.1.4 ACCEPTANCE OF COMPLETED WATER MAINS

All water mains shall be laid to the lines and grades specified on the approved plans. The District will grant initial acceptance of the water mains only after all defects have been corrected and all required tests have been satisfactorily passed. Initial acceptance of the work does not relieve the Contractor from having to comply with all other requirements as established in these Standards and in the District's Rules and Regulations. Final acceptance of the work will be granted by the District at the end of the two year warranty period.

5.5.2 SANITARY SEWER FACILITIES

5.5.2.1 GENERAL

Prior to final acceptance of the work, tests for the tightness of construction shall be coordinated and executed by the Contractor in accordance with these Standards. All testing shall be paid for by the Contractor and conducted under the observation of the District.

The Contractor shall be solely responsible for insuring that no obstructions or deflections exist within the completed sewers. Any obstruction found shall be removed and if necessary, the sewer pipe shall be replaced as directed by the District. Video inspection of all sewer mains is required by the District.

5.5.2.2 TESTING PROCEDURES

5.5.2.2.a Gravity Sewer Air Testing

Low-pressure air testing of PVC sewers shall be completed in accordance with ASTM C-828 and shall be conducted after backfilling and compaction of the mains has been completed. The Contractor shall provide all equipment and personnel necessary to perform the required tests.

Each test section shall not be any longer than the length of pipe between adjacent manholes. The ends of the sewer being tested shall be plugged and braced and the test section subsequently pressurized to 4.0 psi. The pressure pump shall be turned off and the air in the sewer allowed to stabilize for a minimum of 2 minutes. The time will be monitored as the main either holds pressure or drops by 1.0 psi (if the groundwater is higher than the top of the pipe, the test pressure shall be increased to account for the high groundwater table).

The allowable rate of air loss shall be no greater than 0.0015 cubic feet per minute per square foot of internal pipe surface. The elapsed time for the pressure to drop 1.0 psi shall exceed the larger value of T as defined by the following two formulas:

$$T = 0.0237\ L\ D^2$$

and

$$T = 56.7\ D$$

where: T = time of test (in seconds)
L = length of pipe being tested (in feet)
D = diameter of pipe (in inches)

For simplification, the following table incorporates both equations and tabulates the minimum acceptable time period, in minutes and seconds, for the pressure to drop 1.0 psi.

Pipe Diameter (inches)	Pipe Length (feet)						
	0-150	**200**	**250**	**300**	**350**	**400**	**500**
4	3:46	3:46	3:46	3:46	3:46	3:46	3:46
6	5:40	5:40	5:40	7:36	8:52	10:08	12:38
8	7:34	7:34	7:34	7:36	8:52	10:08	12:38
10	9:26	9:26	9:53	11:52	13:51	15:49	19:45
12	11:20	11:24	14:15	17:05	19:56	22:47	28:26
15	14:10	17:48	22:15	26:42	31:09	35:36	44:26

In sections of main that fail the air test, defects shall be repaired and the tests repeated. Repair and repeat testing shall be continued until the testing requirements are met.

5.5.2.2.b Gravity Sewer Deflection Testing

After backfilling and compaction is complete, each reach of the sewer shall be checked for excessive deflection by pulling a standard 9 fin mandrel through the pipe. Pipe with diametral deflection exceeding 5% of the inside diameter shall be uncovered, and the bedding and backfill replaced in an attempt to mitigate any excessive deflection. The deflected pipe shall be retested and repaired as necessary until the testing requirements have been met.

5.5.2.2.c CCTV of Gravity Sewers

Final inspection of the sewers shall be done by closed circuit television (CCTV) inspection of sewers and shall include an acceptable .pdf video report. Inspection shall be done by the Contractor. All sewer installations that are removed and replaced with sewer line connections shall also be inspected by CCTV. An electronic copy of the recorded video inspection and .pdf video report shall be given to the District for their records and acceptance. The distance of all service line connections to the new sewer main, from the nearest upstream manhole, shall be recorded and indicated on the final electronic report.

5.5.2.2.d Force Main Pressure Testing

Sanitary sewer force mains constructed using water main materials shall be tested in accordance with water main testing criteria. Pressure tests and leakage tests shall be performed at 150 psi and required to meet or exceed the allowable leakage requirements for water mains.

5.5.2.2.e Manhole Vacuum Testing

Manholes shall be vacuum tested before the ring and cover and concrete adjustment collars have been installed. All pipes entering the manhole shall be plugged and braced and a vacuum of 10 inches of mercury shall be drawn. The vacuum pump shall be turned off and the time monitored as the vacuum drops one inch. The vacuum must not drop more than one inch in 60 seconds for a 4-foot diameter manhole, or one inch in 75 seconds for a 5-foot diameter manhole.

For manholes that fail the vacuum test, defects shall be repaired and the tests repeated. Repair and repeat testing shall be continued until the testing requirements have been met.

5.5.2.3 ACCEPTANCE OF COMPLETED SEWER MAINS

All sewer mains shall be laid to the lines and grades specified on the Approved Documents, with uniform slopes and straight alignments between manholes.
Initial acceptance of the sewer main will be granted by the District only after all required tests have been satisfactorily completed and all defects have been appropriately remedied. Initial acceptance of the work does not relieve the Contractor from having to comply with all other requirements as established in these Standards and in the District's Rules and Regulations. Final acceptance of the work will be granted by the District at the end of the two year warranty period.

SECTION 6 – STANDARD DETAILS

Standard Detail Contents

General Details

G-1	Typical Residential Street Section, Showing Relationship Between Utilities
G-2	Typical Residential Water and Sewer Service Line Locations
G-3	Sanitary Sewer Crossing with Inadequate Clearance to an Existing Potable or Irrigation Water Main
G-4	Pipe Bedding for PVC Mains
G-5	Pipe Bedding for Ductile Iron Mains
G-6	Steel Marker Post

General Water System Details (Potable and Irrigation)

W-1	Potable Valve Box and Covers
W-2	Potable Deep Valve Box and Cover
W-2A	Irrigation Valve Box and Cover
W-3	Tracer Wire Test Station
W-4	Combination Air Valve and Manhole
W-5	Residential Vent Assembly
W-6	Restrained Pipe Lengths
W-7	Concrete Thrust Blocks
W-8	Water Main Lowering on a New Water Main Installation
W-9	Water Main Lowering on an Existing Water Main
W-9A	Upper Vertical Bend Thrust Block
W-10	1-1/2” Through 2” Meter Manhole
W-11	3” and Larger Meter Vault
W-12	Temporary Connection Between Potable & Irrigation Water Distribution Systems
W-13	Future Connection Manhole for Irrigation Water Systems
W-14	Transmission Main 6” drain installation
W-15	Bored Crossing Beneath Conduits
W-16	Bore Casing Detail
W-17	Combination Flanged Harness Lug Details
W-18	Tracer Wire Connectors

Potable Water System Details

WP-1	Potable Water Meter Pit, 5/8"x3/4" and 3/4" Sizes (Not Applicable Where Fire Suppression is Required)
WP-2	Potable Water Meter Pit, 1” Size (Minimum Size For Residential Fire Suppression Systems)
WP-2A	Dual Service Meter Pit 1” Size (For Residential Fire Suppression Systems)
WP-3	Potable Service Line Installation, Attached Walk Residential Service
WP-3A	Potable Service Line Installation, Attached Walk Service With Fire Suppression (New Construction)
WP-3B	Potable Service Line Installation, Attached Walk Service With Fire Suppression (Existing Meters)
WP-4	Potable Service Line Installation, Detached Walk Residential Service

WP-4A	Potable Service Line Installation, Detached Walk Service With Fire Suppression (New Construction)
WP-4B	Potable Service Line Installation, Detached Walk Service With Fire Suppression (Existing Meters)
WP-5	Fire Hydrant Assembly, Attached Walk
WP-6	Fire Hydrant Assembly, Detached Walk
WP-7	Traffic Bollard Surrounding a Fire Hydrant in a Commercial/Industrial Application
WP-8	Multi-Setter Meter Manhole (Plan View) – Side Entry
WP-8.1	Multi-Setter Meter Manhole (Elevation View) – Side Entry
WP-9	Above Ground Sampling Station

Irrigation Water System Details

WI-1	Irrigation Water Meter Pit, 5/8"x3/4" and 3/4" Sizes
WI-2	Irrigation Water Meter Pit, 1” Size
WI-3	Irrigation Service Line Installation, Attached Walk Residential Service
WI-4	Irrigation Service Line Installation, Detached Walk Residential Service
WI-5	Irrigation Stop-and-Waste Valve Box, Cover, and Extension Rod
WI-6	Irrigation Blow-Off Installation on Dead-End Water Line (12” and Smaller Pipe)
WI-7	Irrigation Blow-Off Installation Using Saddle Tap (12” and Smaller Pipe)
WI-8	Irrigation Sampling Station Installation
WI-9	Flushing Hydrant Assembly

Sanitary Sewer System Details

S-1	Manhole on New Sewer
S-1A	Manhole on New Sewer (Located outside of pavement)
S-2	Manhole on Existing Sewer
S-2A	Manhole on Existing Sewer (Located outside of pavement)
S-3	Sampling Manhole
S-3A	Sampling Manhole (Located outside of pavement)
S-4	Outside Drop Manhole
S-5	Shallow Manhole Top
S-6	Manhole Inverts
S-7	Sewer Main Connection to Existing Manhole
S-8	Sewer Service Line Connections
S-8A	Sewer Service Line Connection Rehabilitation Service Tap Abandonment
S-9	At Grade Commercial Service Line Cleanout
S-10	Inside Drop Manhole
S-11	Grease Interceptor Type A
S-12	Grease Interceptor Type B
S-13	Sand/Oil Interceptor Type A
S-14	Sand/Oil Interceptor Type B
S-15	Tracer Wire Installation on Sanitary Sewer Main
S-16	Tracer Wire Installation on Sanitary Sewer Service
S-17	Tracer Wire Installation on Sanitary Sewer at Dead-end Manhole

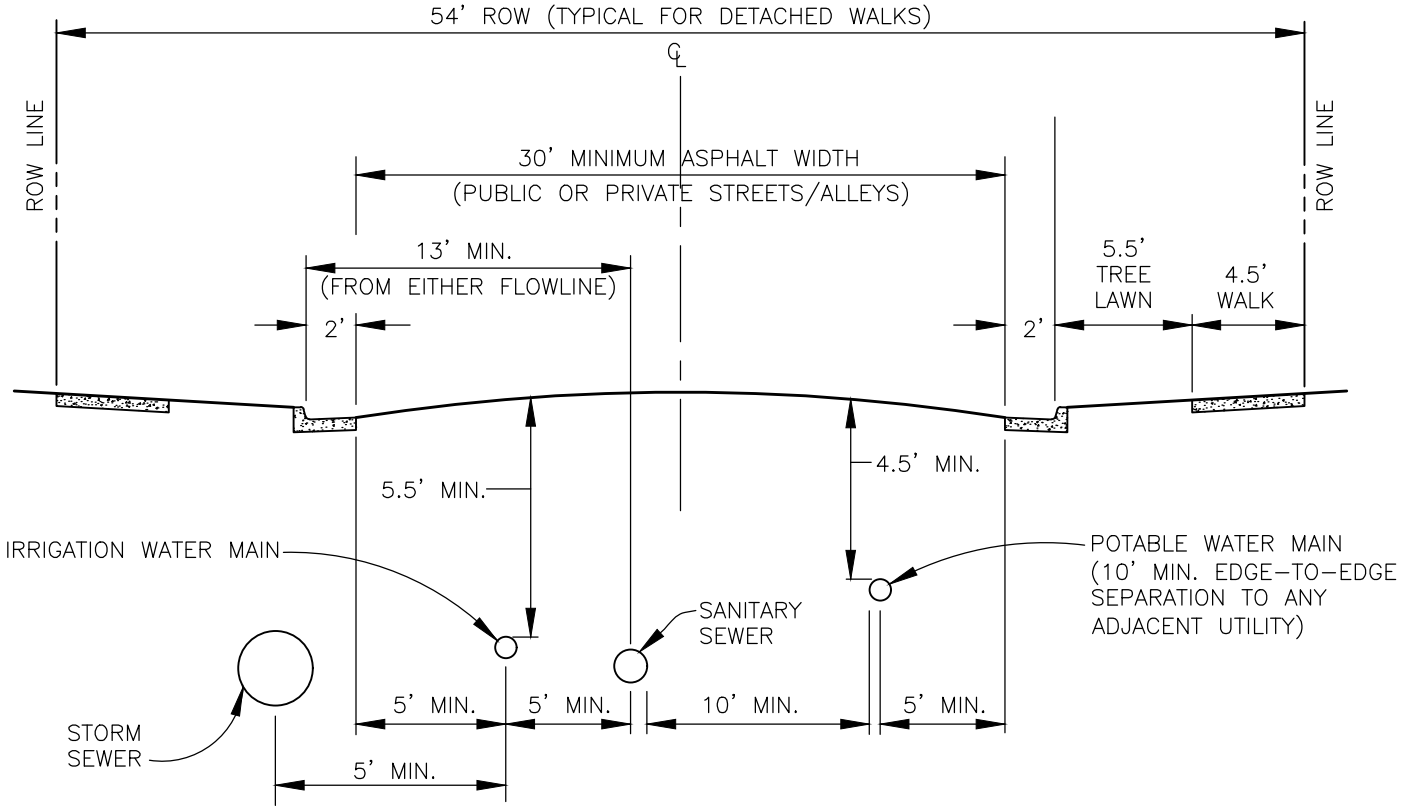

REVISIONS:	SOUTH ADAMS COUNTY WATER AND SANITATION DISTRICT	G-1
6/7/00		
2/1/01		
8/1/02		
7/13/11	TYPICAL RESIDENTIAL STREET SECTION SHOWING RELATIONSHIP BETWEEN UTILITIES	
12/5/24		

NOTES:

1. POTABLE AND IRRIGATION SERVICES SHALL BE TYPICALLY LOCATED 3' INSIDE THE LOT LINE.
2. WHERE FIRE HYDRANTS ARE LOCATED AT A LOT LINE, THE POTABLE SERVICE SHALL BE LOCATED 5' OFF THE LOT LINE.
3. SEWER SERVICE LINES SHALL GENERALLY BE LOCATED IN THE CENTER OF EACH LOT.
4. SEWER SERVICES SHALL BE LOCATED A MINIMUM DISTANCE OF 10' FROM POTABLE AND 5' FROM IRRIGATION SERVICES. WATER SERVICES SHALL BE LOCATED A MINIMUM DISTANCE OF 10' FROM IRRIGATION SERVICES.

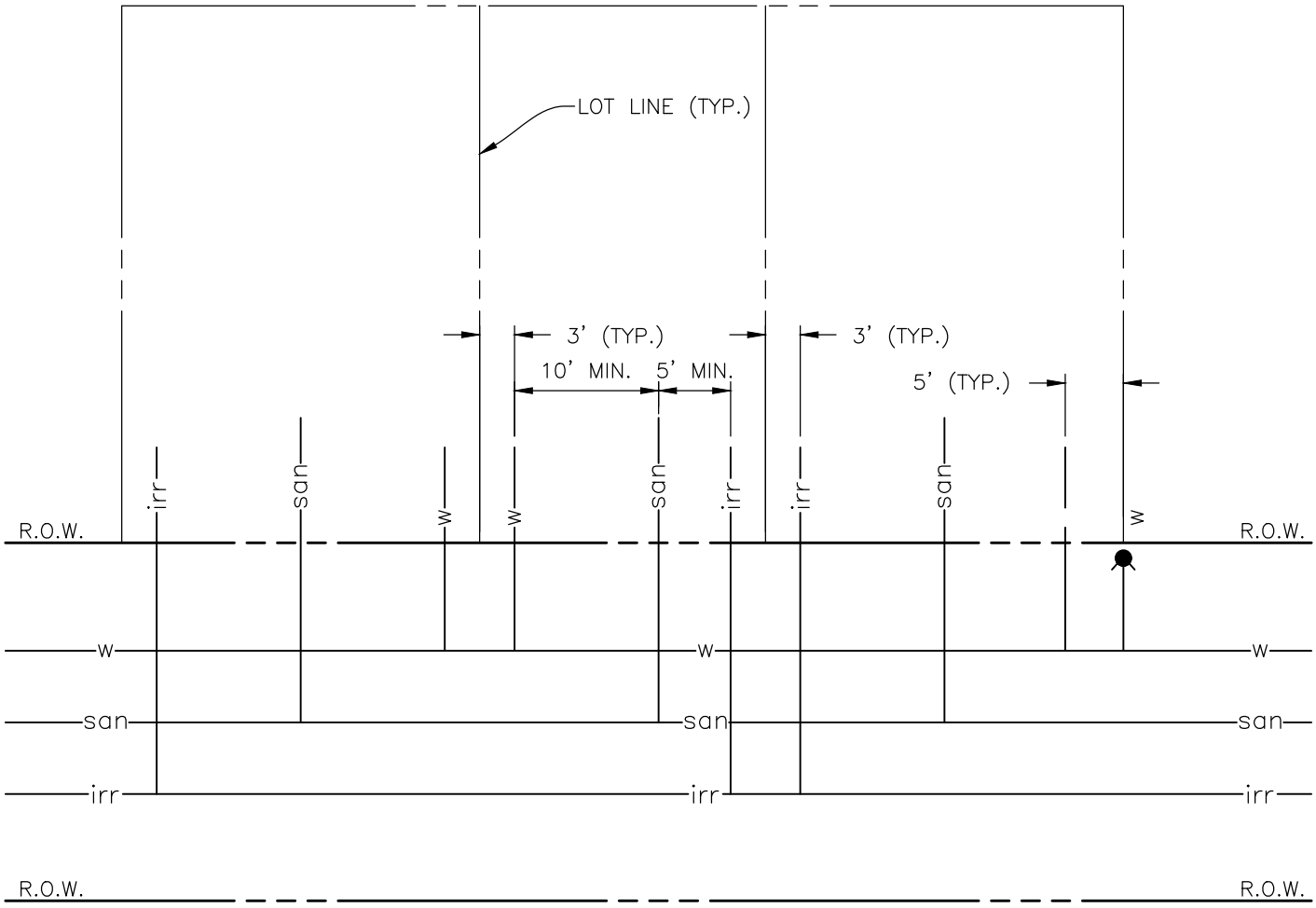

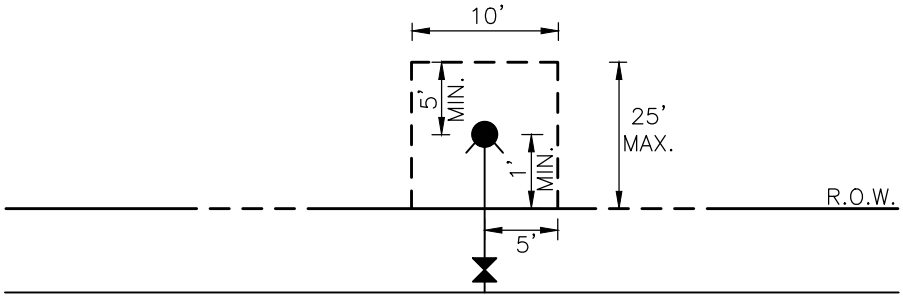

FIRE HYDRANT EASEMENT

REVISIONS:	SOUTH ADAMS COUNTY WATER AND SANITATION DISTRICT	G-2
7/13/11		
10/2/15	TYPICAL RESIDENTIAL WATER AND SEWER SERVICE LINE LOCATIONS	
2/24/16		

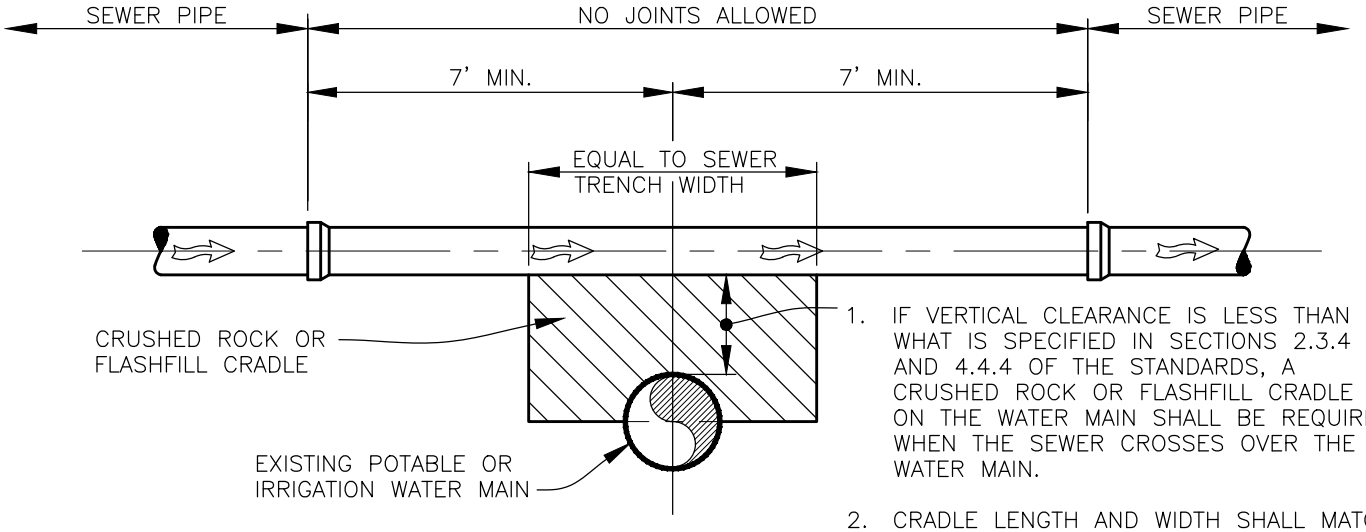

1. IF VERTICAL CLEARANCE IS LESS THAN WHAT IS SPECIFIED IN SECTIONS 2.3.4 AND 4.4.4 OF THE STANDARDS, A CRUSHED ROCK OR FLASHFILL CRADLE ON THE WATER MAIN SHALL BE REQUIRED WHEN THE SEWER CROSSES OVER THE WATER MAIN.
2. CRADLE LENGTH AND WIDTH SHALL MATCH WIDTH OF SEWER TRENCH.
3. FLASHFILL SHALL BE SEPARATED FROM PIPE & FITTINGS BY A BOND BREAKER (PLASTIC SHEETING).

SEWER CROSSING OVER EXISTING POTABLE OR IRRIGATION WATER MAIN

N.T.S.

NOTES: CRUSHED ROCK SHALL COMPLY WITH THE REQUIREMENTS ESTABLISHED FOR SEWER BEDDING IN SECTION 5.4.2.B OF THE STANDARDS. FLASHFILL SHALL COMPLY WITH THE REQUIREMENTS SET FORTH IN SECTION 5.4.5.4.A OF THE STANDARDS.

1. IF VERTICAL CLEARANCE IS LESS THAN WHAT IS SPECIFIED IN SECTIONS 2.3.4 AND 4.4.4 OF THE STANDARDS, A CRUSHED ROCK OR FLASHFILL CRADLE ON THE SEWER MAIN SHALL BE REQUIRED WHEN THE SEWER CROSSES UNDER THE WATER MAIN.
2. CRADLE LENGTH SHALL BE 5' (MIN.) EACH SIDE OF THE WATER MAIN CENTERLINE. CRADLE WIDTH SHALL MATCH THE WIDTH OF THE SEWER TRENCH.
3. FLASHFILL SHALL BE SEPARATED FROM PIPE FITTINGS BY A BOND BREAKER (PLASTIC SHEETING).

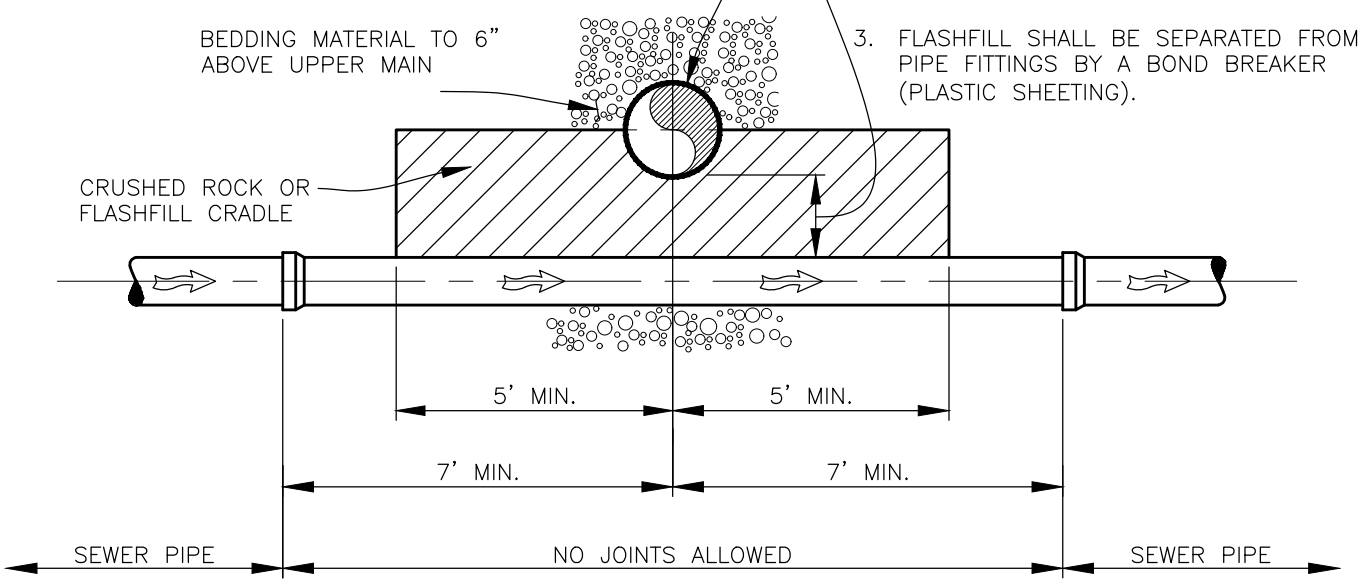

SEWER CROSSING UNDER EXISTING POTABLE OR IRRIGATION WATER MAIN

N.T.S.

REVISIONS:	SOUTH ADAMS COUNTY WATER AND SANITATION DISTRICT	G-3
6/7/00		
2/1/01		
8/1/02	SANITARY SEWER CROSSING WITH INADEQUATE CLEARANCE TO AN EXISTING POTABLE OR IRRIGATION WATER MAIN	
7/13/11		

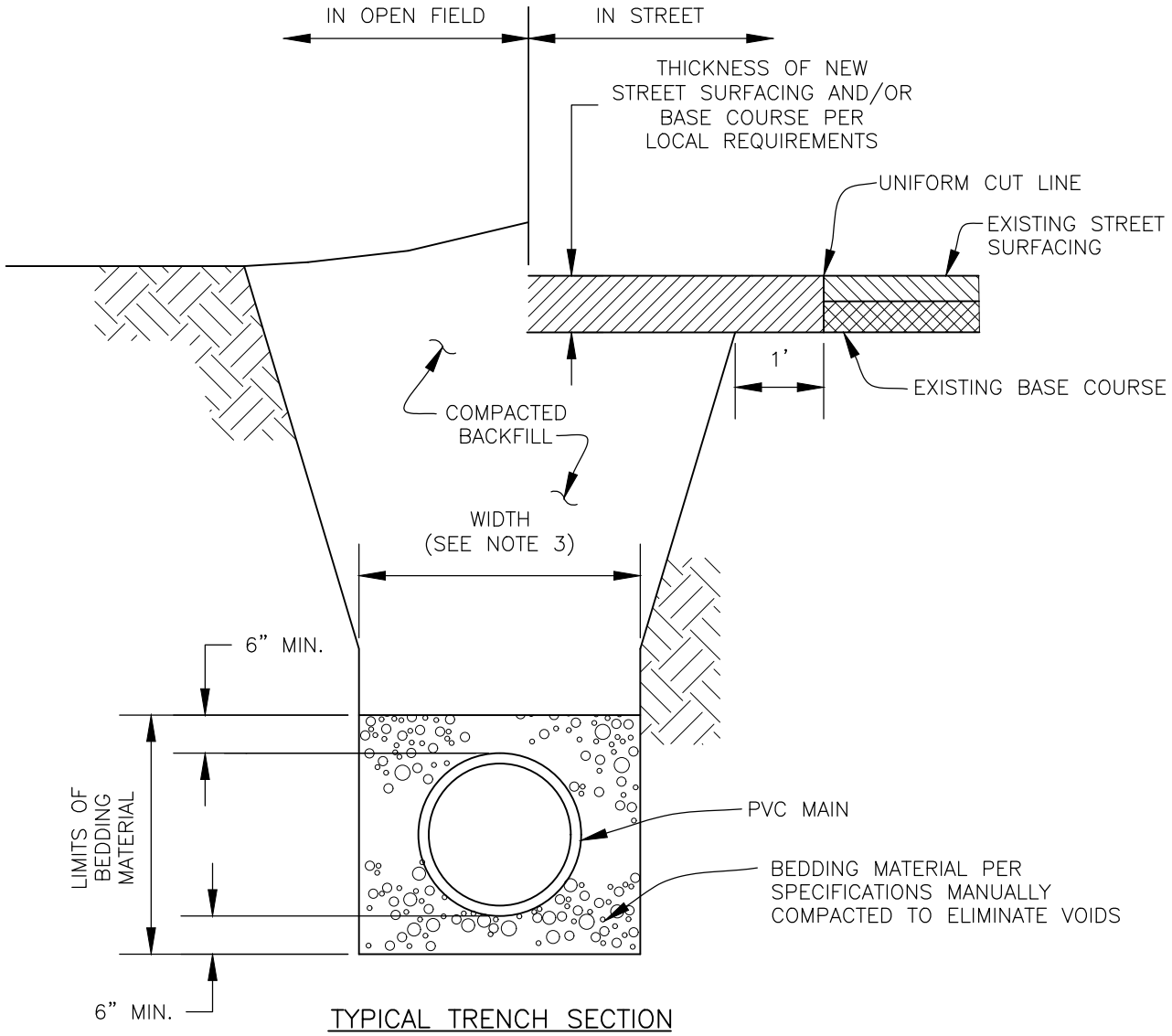

TYPICAL TRENCH SECTION

NOTES:

1. TRENCH TO BE BRACED OR SHEETED AS NECESSARY FOR THE SAFETY OF THE WORKMEN AND PROTECTION OF OTHER UTILITIES IN ACCORDANCE WITH APPLICABLE LOCAL, STATE AND FEDERAL SAFETY REGULATIONS.

2. MAIN SHALL BE BEDDED FROM 6" BELOW THE BOTTOM OF THE MAIN TO 6" ABOVE THE TOP OF THE MAIN.

3. TRENCH WIDTH SHALL NOT BE MORE THAN 16" NOR LESS THAN 12" WIDER THAN THE LARGEST OUTSIDE DIAMETER OF THE MAIN.

4. COMPACTION SHALL BE AS FOLLOWS: TRENCH ZONE ABOVE BEDDING MATERIALS IN ROADWAY OR STREET R.O.W. LIMITS WILL REQUIRE 95% S.P.D., TRENCH ZONE ABOVE BEDDING MATERIALS OUTSIDE OF STREET R.O.W. WILL REQUIRE 90% S.P.D. OR 100% OF THE DRY DENSITY OF THE UNDISTURBED SOIL ADJACENT TO THE TRENCH.

REVISIONS:	SOUTH ADAMS COUNTY WATER AND SANITATION DISTRICT	G-4
6/7/00		
2/1/01		
8/1/02	PIPE BEDDING FOR PVC MAINS	
7/13/11		

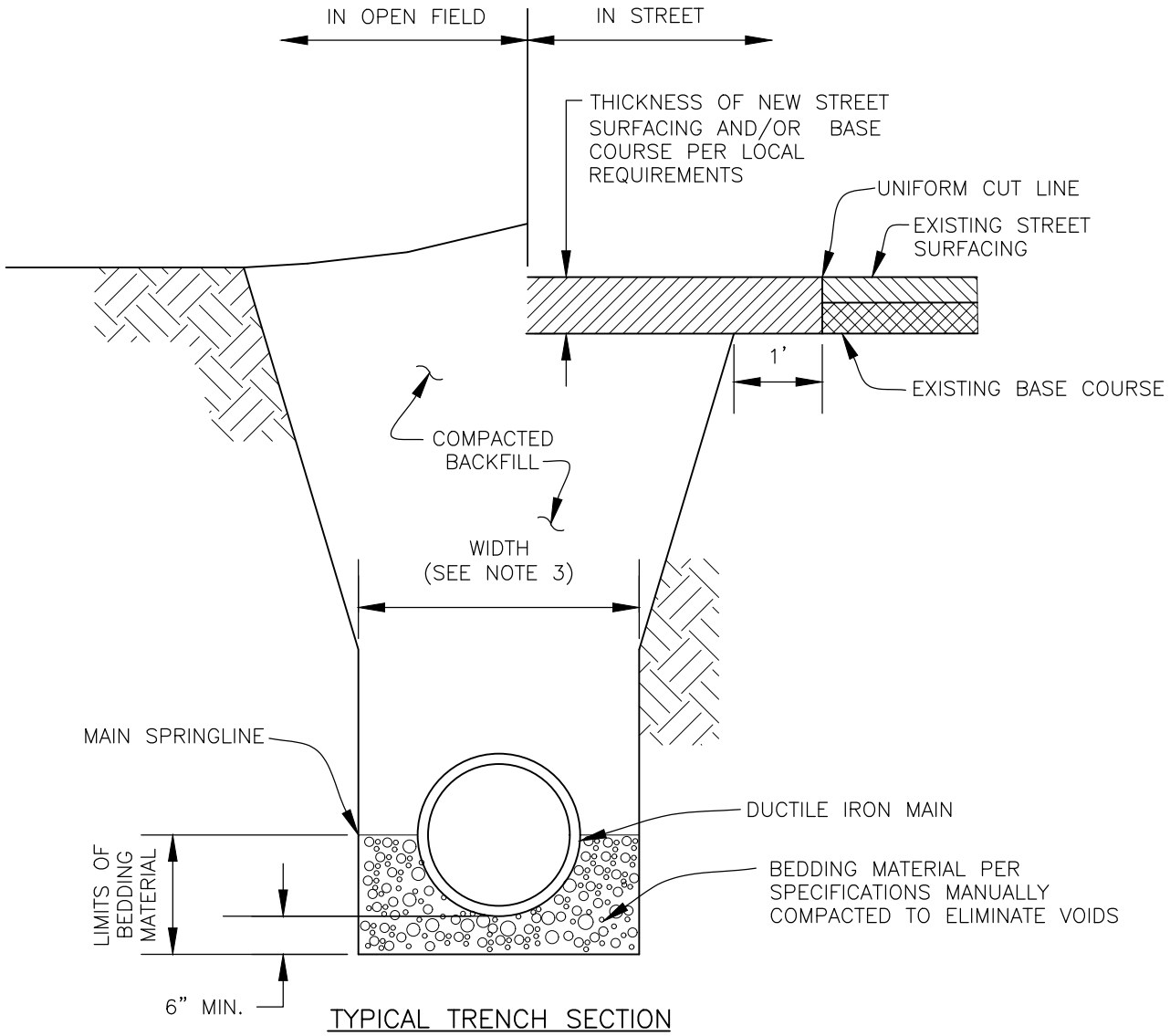

TYPICAL TRENCH SECTION

NOTES:

1. TRENCH TO BE BRACED OR SHEETED AS NECESSARY FOR THE SAFETY OF THE WORKMEN AND PROTECTION OF OTHER UTILITIES IN ACCORDANCE WITH APPLICABLE LOCAL, STATE AND FEDERAL SAFETY REGULATIONS.

2. MAIN SHALL BE BEDDED FROM 6" BELOW THE BOTTOM OF THE MAIN TO SPRINGLINE.

3. TRENCH WIDTH SHALL NOT BE MORE THAN 16" NOR LESS THAN 12" WIDER THAN THE LARGEST OUTSIDE DIAMETER OF THE MAIN.

4. COMPACTION SHALL BE AS FOLLOWS: TRENCH ZONE ABOVE BEDDING MATERIALS IN ROADWAY OR STREET R.O.W. LIMITS WILL REQUIRE 95% S.P.D., TRENCH ZONE ABOVE BEDDING MATERIALS OUTSIDE OF STREET R.O.W. WILL REQUIRE 90% S.P.D. OR 100% OF THE DRY DENSITY OF THE UNDISTURBED SOIL ADJACENT TO THE TRENCH.

REVISIONS:	SOUTH ADAMS COUNTY WATER AND SANITATION DISTRICT	G-5
6/7/00 2/1/01 8/1/02 7/13/11	PIPE BEDDING FOR DUCTILE IRON MAINS	

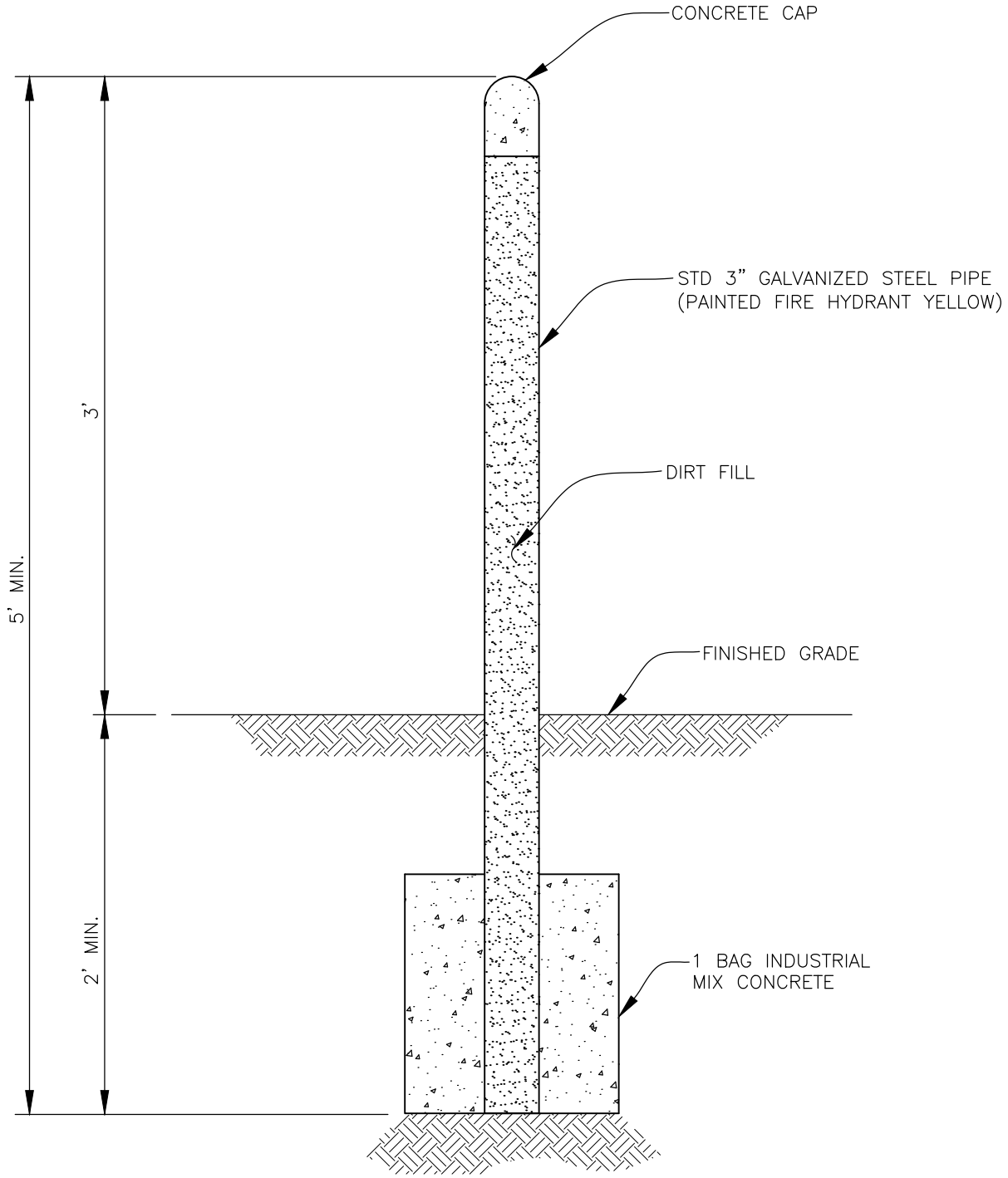

NOTE:
THE DISTRICT MARKER POST STANDARD IS FLEXIBLE CARSONITE, COLOR-CODED BY UTILITY. THE DISTRICT SHALL BE CONTACTED TO DETERMINE WHERE, AND UNDER WHAT CONDITIONS, STEEL MARKER POSTS WILL BE REQUIRED IN LIEU OF CARSONITE.

REVISIONS:	SOUTH ADAMS COUNTY WATER AND SANITATION DISTRICT	G-6
6/7/00		
8/1/02		
7/13/11	STEEL MARKER POST	

NOTES:

1. CARE SHALL BE TAKEN WHEN INSTALLING VALVES TO INSURE PROPER SUPPORT OF THE VALVE. CONCRETE BLOCKS OR 3/4" WASHED ROCKS SHALL BE INSTALLED UNDER THE VALVE TO PROVIDE PROPER SUPPORT WHERE REQUIRED BY THE DISTRICT.
2. TRACER WIRE SHALL NOT BE BROUGHT UP VALVE BOXES.
3. IF DEPTH OF BURY IS MORE THAN 4.5 FEET REFER TO DETAIL W-2.

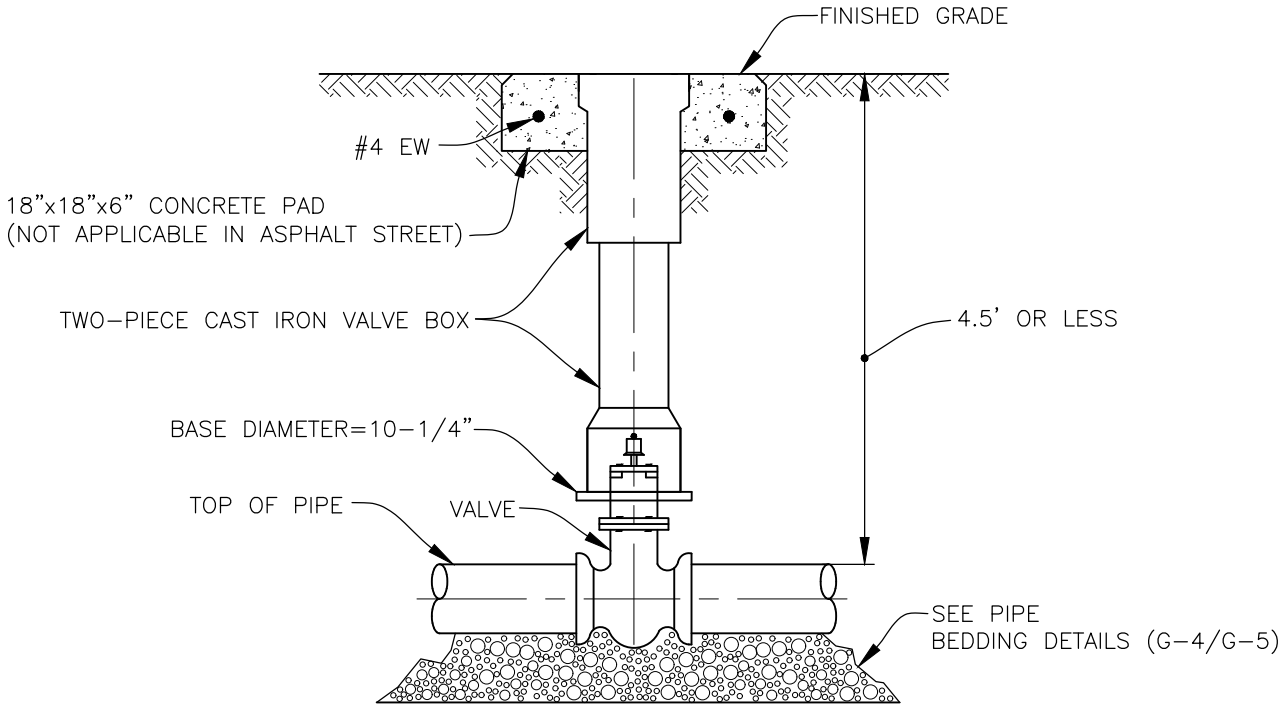

POTABLE VALVE BOX NOTE:
POTABLE VALVE BOX LID RESTS INSIDE THE UPPER VALVE BOX SECTION.

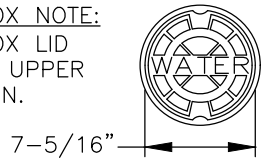

POTABLE VALVE BOX COVER PLAN
N.T.S.

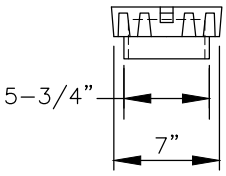

POTABLE VALVE BOX COVER ELEVATION
N.T.S.

REVISIONS:	SOUTH ADAMS COUNTY WATER AND SANITATION DISTRICT	W-1
2/1/01 8/1/02 7/13/11 2/24/16	POTABLE VALVE BOX AND COVERS	

NOTES:

1. DEEP VALVE BOXES SHALL BE USED FOR ALL VALVE BOX INSTALLATIONS ON POTABLE LINES WITH GREATER THAN 4.5 FEET OR MORE OF COVER TO FINAL GRADE, AS APPROVED BY THE DISTRICT.
2. COVER TO FINAL GRADE GREATER THAN 6 FEET OR ANY OTHER VARIANCE TO THIS DETAIL REQUIRES PRIOR APPROVAL BY THE DISTRICT.
3. THE TOP SECTION OF THE VALVE BOX SHALL BE SET AND ADJUSTED TO FINAL GRADE AS TYPICALLY DONE.
4. REFER TO DETAIL W–1 FOR OTHER STANDARD VALVE BOX SPECIFICS.
5. DEEP VALVE BOXES SHALL BE SCREW TYPE (SEE APPROVED MATERIALS LIST).

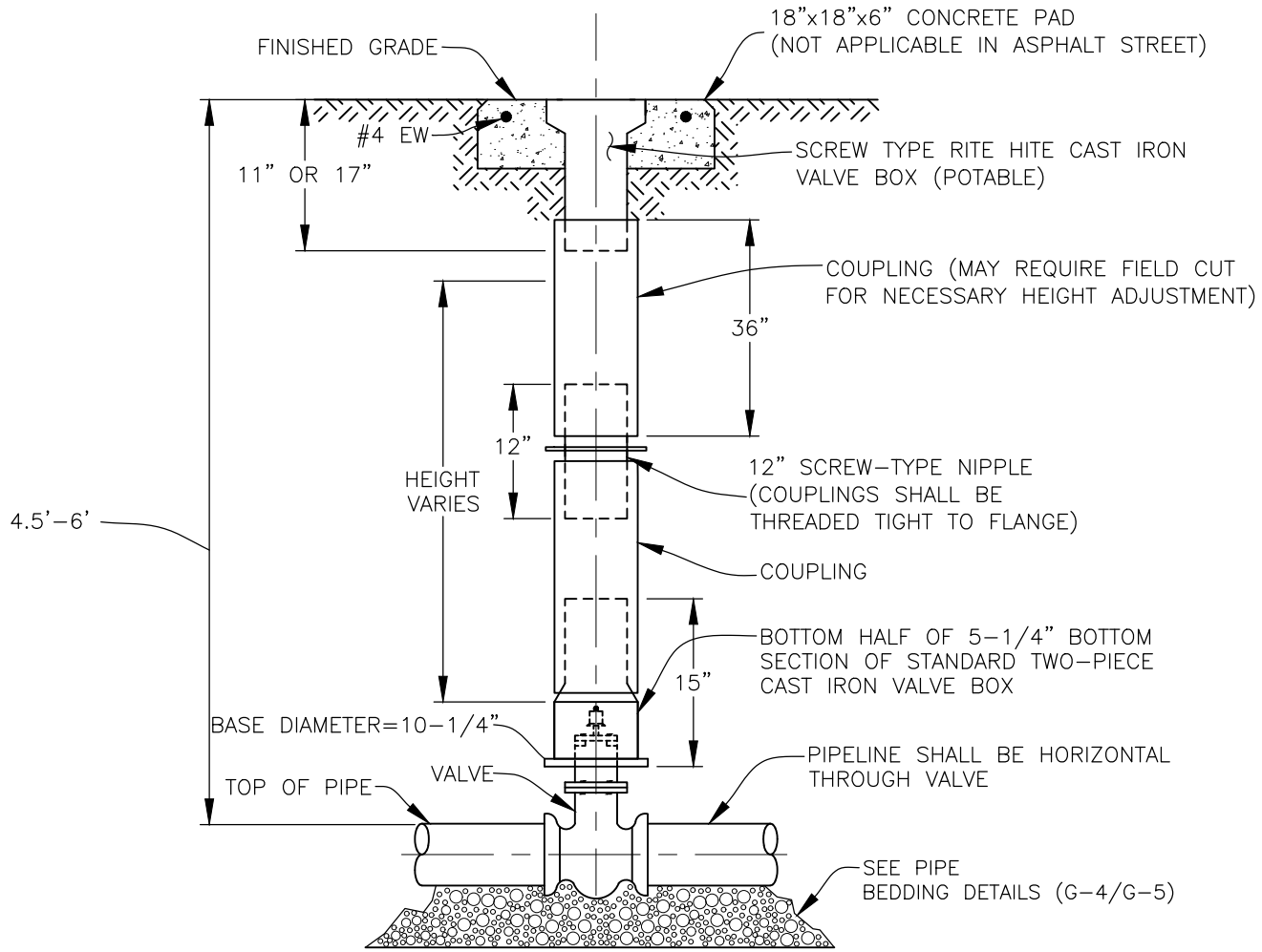

POTABLE VALVE BOX NOTE:
POTABLE VALVE BOX LID RESTS INSIDE THE UPPER VALVE BOX SECTION.

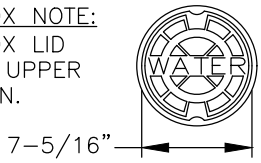

POTABLE VALVE BOX COVER PLAN
N.T.S.

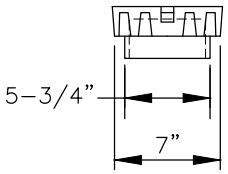

POTABLE VALVE BOX COVER ELEVATION
N.T.S.

REVISIONS:	SOUTH ADAMS COUNTY WATER AND SANITATION DISTRICT	W-2
7/13/11		
2/4/16		
	POTABLE DEEP VALVE BOX AND COVER	

NOTES:

1. COVER TO FINAL GRADE GREATER THAN 7 FEET OR ANY OTHER VARIANCE TO THIS DETAIL REQUIRES PRIOR APPROVAL BY THE DISTRICT.
2. THE TOP SECTION OF THE VALVE BOX SHALL BE SET AND ADJUSTED TO FINAL GRADE AS TYPICALLY DONE.
3. IRRIGATION VALVE BOXES SHALL BE SCREW TYPE (SEE APPROVED MATERIALS LIST).
4. THE TOP VALVE BOX SECTION FOR IRRIGATION VALVES SHALL BE THREADED INTO THE COUPLING. SEPARATE IRRIGATION COVERS THAT SLIP OVER A POTABLE TOP SECTION WILL NOT BE ALLOWED.

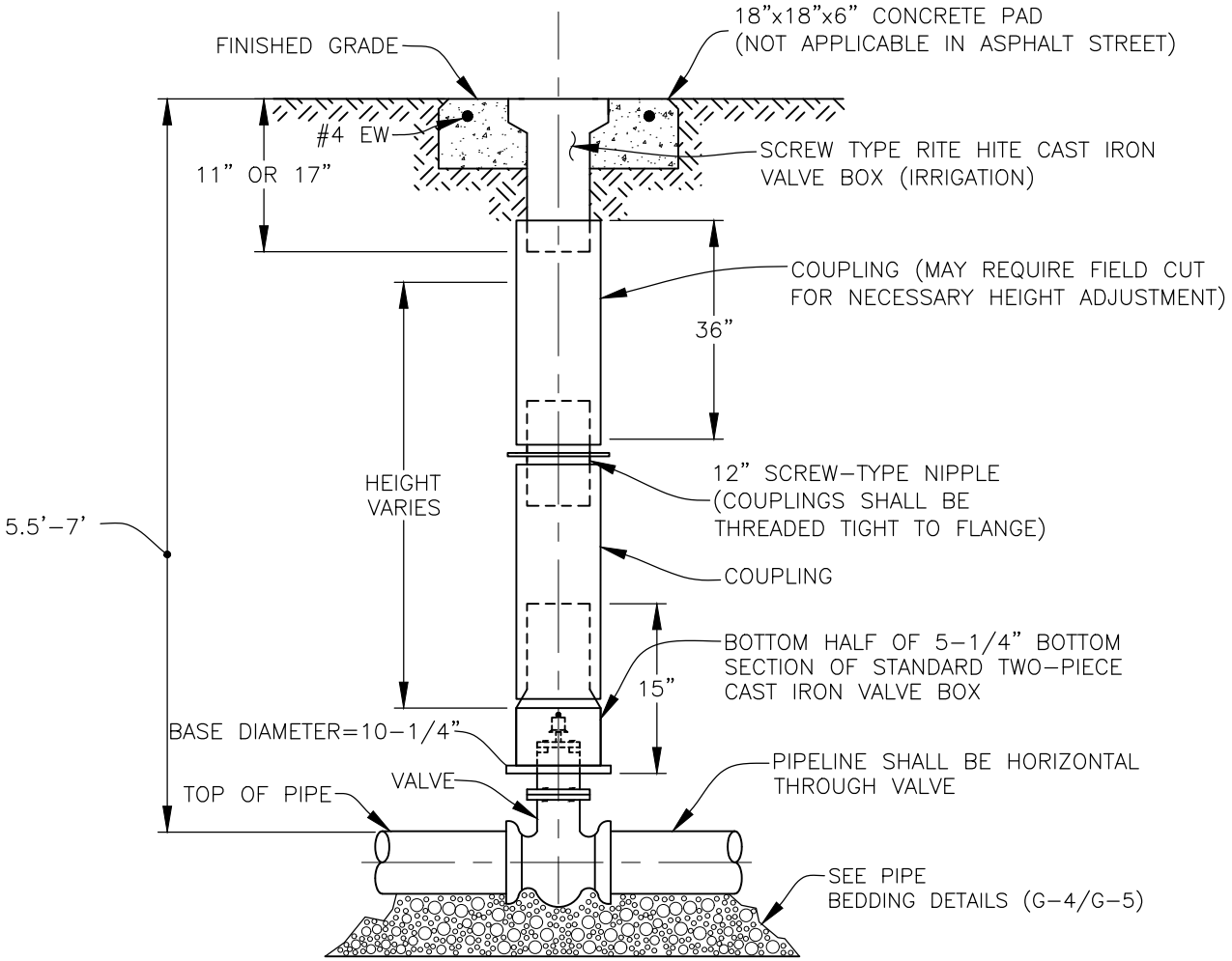

IRRIGATION VALVE BOX NOTE:
IRRIGATION VALVE BOX LID RESTS INSIDE THE UPPER VALVE BOX SECTION.

IRRIGATION VALVE BOX COVER PLAN
N.T.S.

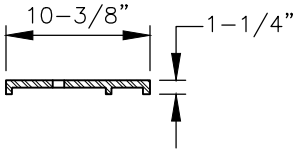

IRRIGATION VALVE BOX COVER ELEVATION
N.T.S.

REVISIONS:	SOUTH ADAMS COUNTY WATER AND SANITATION DISTRICT	W-2A
7/13/11		
2/4/16		
	IRRIGATION VALVE BOX AND COVER	

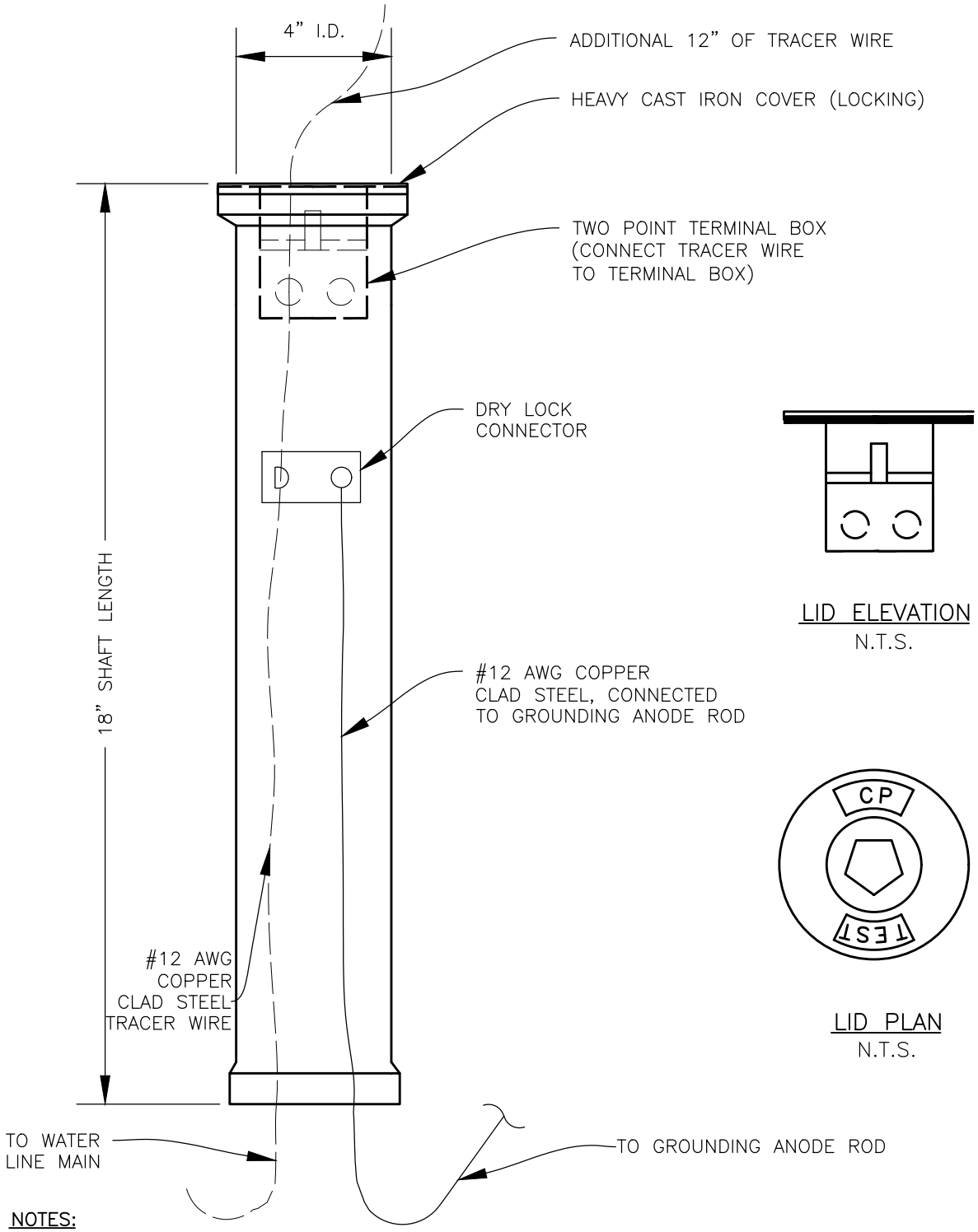

NOTES:

LOCATE TEST STATIONS BEHIND ALL FIRE HYDRANTS ON THE POTABLE DISTRIBUTION SYSTEM. TEST STATIONS SHALL NOT BE UTILIZED ON THE IRRIGATION SYSTEM UNLESS DIRECTED OTHERWISE BY THE DISTRICT.

1. AN ADDITIONAL 1 FOOT OF TRACER WIRE PIGTAIL SHALL BE KEPT INSIDE THE TEST STATION FOR CONNECTION PURPOSES.

2. TEST STATIONS SHALL BE RATED FOR H–20 TRAFFIC LOADING.

3. TRACER WIRE SHALL BE #12 GAUGE DIRECT BURY HIGH STRENGTH COPPER CLAD STEEL TRACER WIRE AND SHALL BE COLOR CODED ACCORDING TO USE.

REVISIONS:	SOUTH ADAMS COUNTY WATER AND SANITATION DISTRICT	W-3
6/7/00 2/1/01 8/1/02 7/13/11 2/24/16	TRACER WIRE TEST STATION	

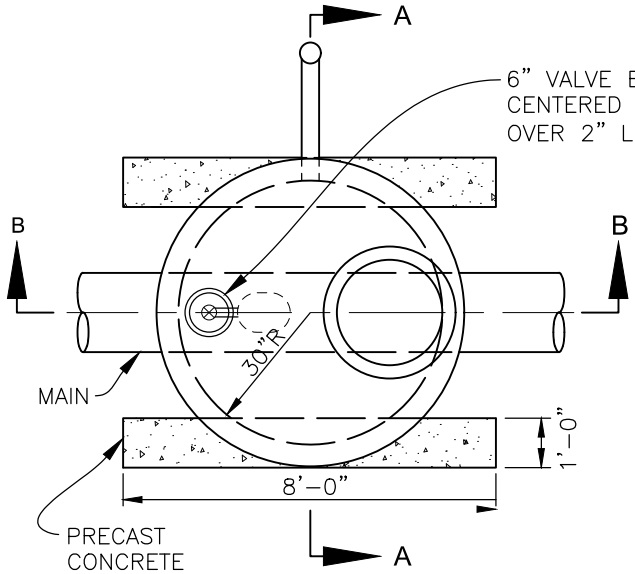

PLAN
N.T.S.

IRRIGATION NOTE:

WHERE AIR VALVE IS INSTALLED ON AN IRRIGATION MAIN, MANHOLE COVER AND VALVE BOX LID SHALL BE IN CONFORMANCE WITH THE REQUIREMENTS OF THE IRRIGATION SYSTEM.

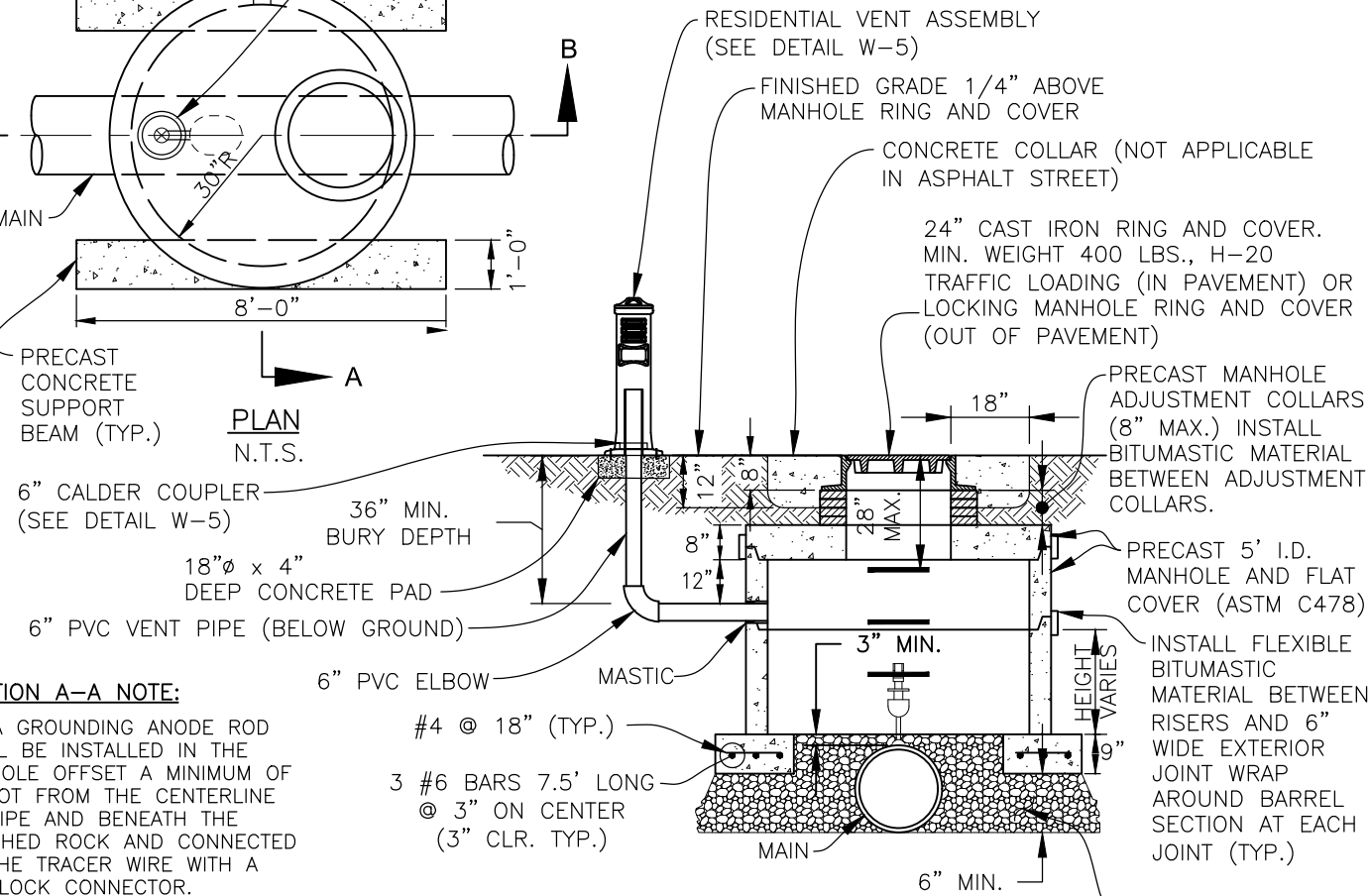

SECTION A-A
(VALVE BOX NOT SHOWN)
N.T.S.

SECTION A-A NOTE:

1. A GROUNDING ANODE ROD SHALL BE INSTALLED IN THE MANHOLE OFFSET A MINIMUM OF 1 FOOT FROM THE CENTERLINE OF PIPE AND BENEATH THE CRUSHED ROCK AND CONNECTED TO THE TRACER WIRE WITH A DRY LOCK CONNECTOR.

SECTION B-B NOTES:

1. 6" THICK CONCRETE ENCASEMENT AROUND VALVE BOX. LEAVE 2" BELOW SURFACE WHEN LOCATED IN ASPHALT.

2. VALVE NUT EXTENSION WITH CENTERING RING IN VALVE BOX. LEAVE 2" OPERATING NUT 2"-3" BELOW LID.

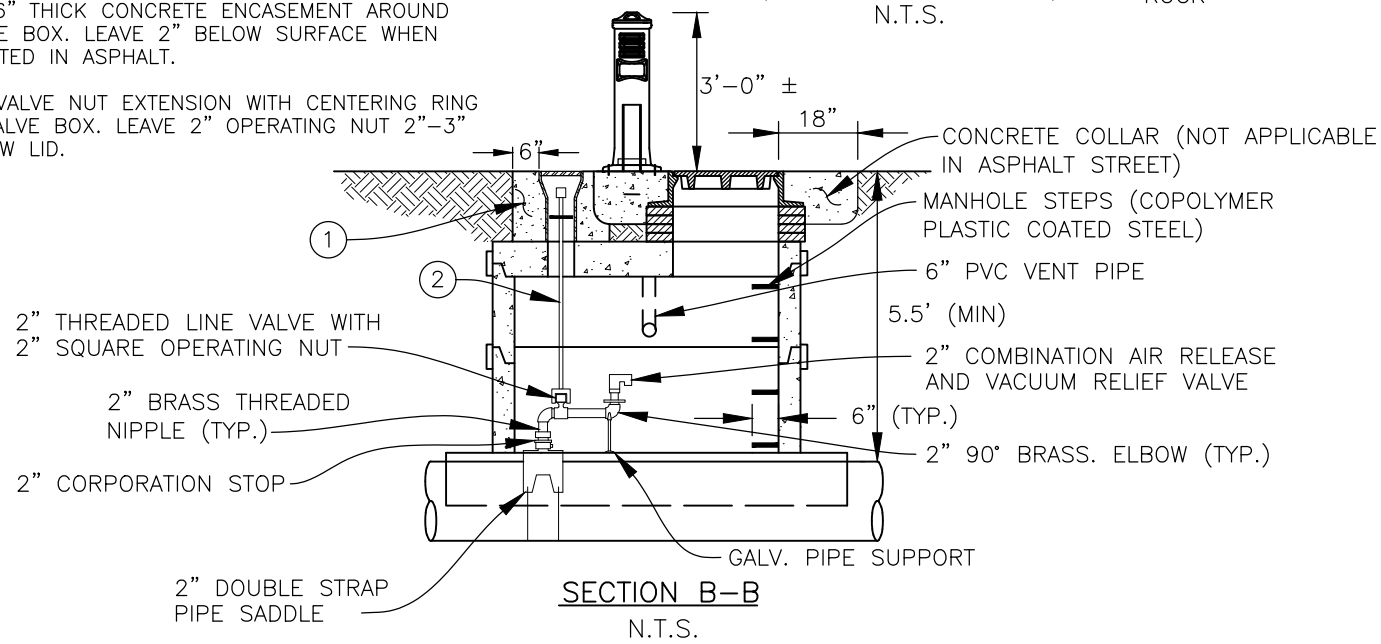

SECTION B-B
N.T.S.

REVISIONS:
6/7/00
2/1/01
8/1/02
7/13/11
2/24/16

SOUTH ADAMS COUNTY WATER AND SANITATION DISTRICT

COMBINATION AIR VALVE AND MANHOLE

W-4

NOTE:
THE STREET VENT ASSEMBLY SHALL BE BLACK IN COLOR (REFER TO APPROVED MATERIALS LIST).

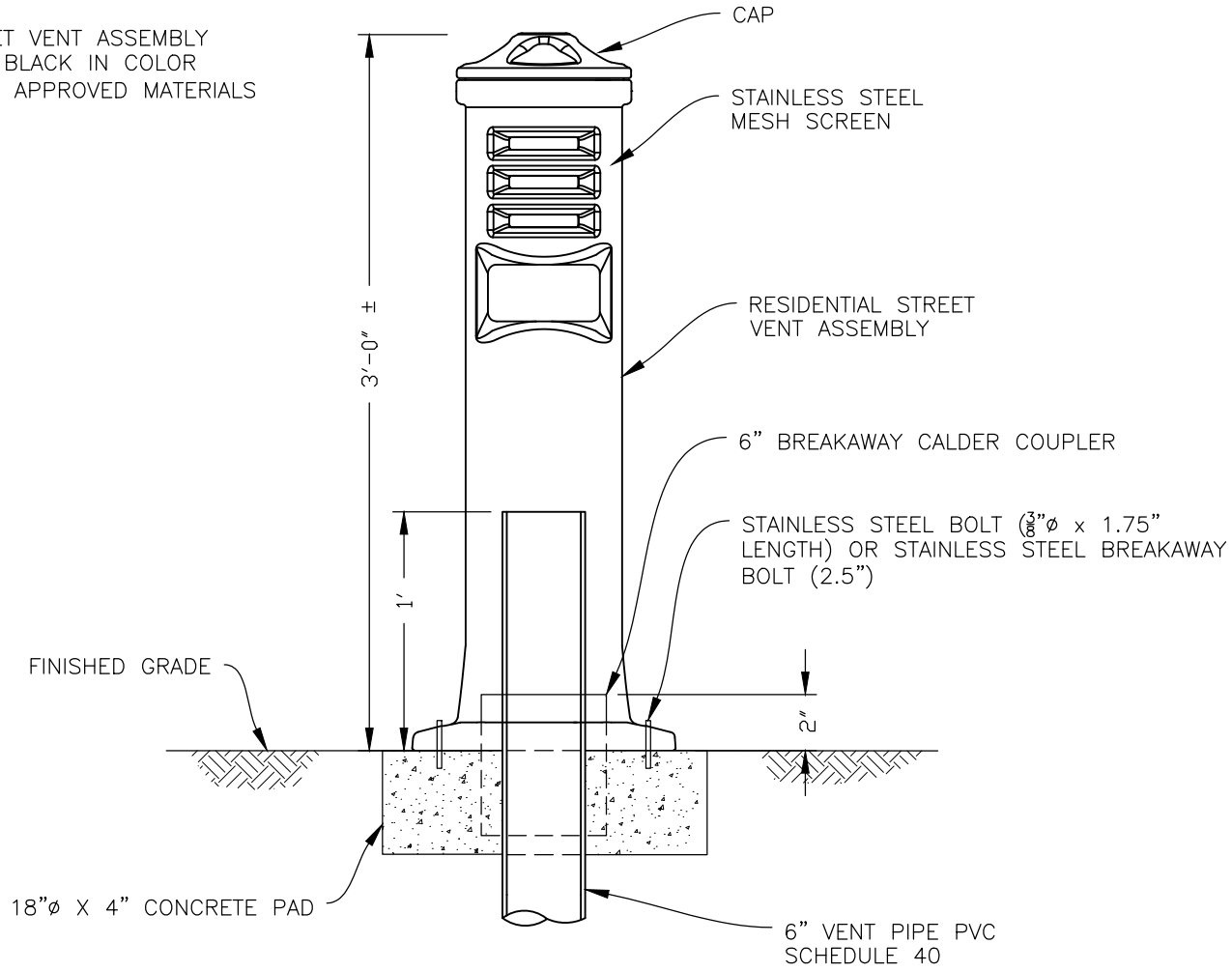

ROUND VENT SCREEN
N.T.S.

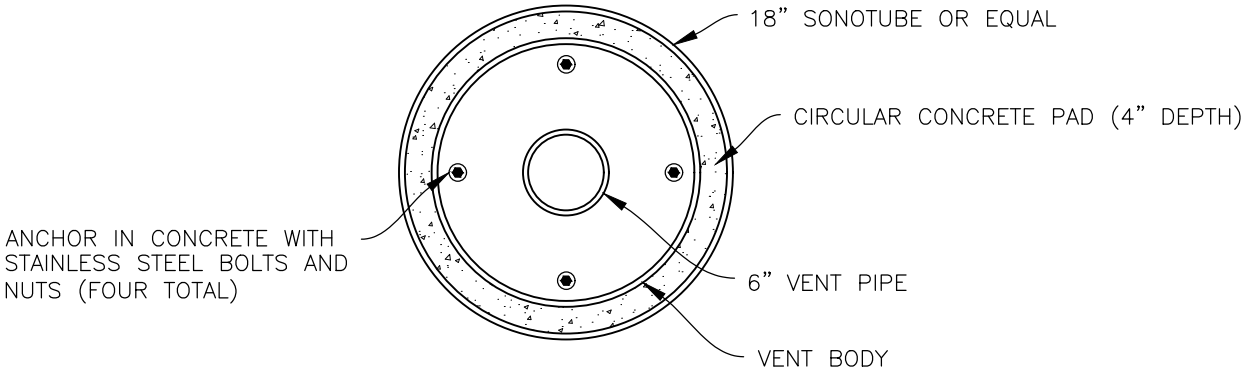

BASE DETAIL
N.T.S.

REVISIONS:	SOUTH ADAMS COUNTY WATER AND SANITATION DISTRICT	W-5
6/7/00		
2/1/01		
8/1/02		
7/13/11	RESIDENTIAL VENT ASSEMBLY	
3/21/16		

LINE SIZE	4"			6"			8"			12"			16"			20"			24"		
	D	L	G	D	L	G	D	L	G	D	L	G	D	L	G	D	L	G	D	L	G
TEE (BRANCH)	3/4"	30'	M.S.	3/4"	45'	M.S.	3/4"	60'	M.S.	3/4"	86'	H.S.	1"	108'	H.S.	1¼"	132'	H.S.	–	155'	–
PLUG OR 90° HORIZ. BEND	3/4"	30'	M.S.	3/4"	45'	M.S.	3/4"	60'	M.S.	3/4"	86'	H.S.	1"	108'	H.S.	1¼"	132'	H.S.	–	155'	–
45° HORIZ. BEND	3/4"	9'	M.S.	3/4"	13'	M.S.	3/4"	18'	M.S.	3/4"	25'	M.S.	1"	32'	M.S.	3/4"	39'	H.S.	–	45'	–
22.5° HORIZ. BEND	3/4"	1'	M.S.	3/4"	4'	M.S.	3/4"	5'	M.S.	3/4"	7'	M.S.	3/4"	8'	M.S.	3/4"	10'	M.S.	–	12'	–
11.25° HORIZ. BEND	–	–	–	–	–	–	–	–	–	3/4"	2'	M.S.	3/4"	2'	M.S.	3/4"	3'	M.S.	–	3'	–
PUSH-ON JOINT PVC IN-LINE VALVE	–	–	–	–	–	–	–	–	–	–	–	–	1"	108'	H.S.	1¼"	132'	H.S.	–	155'	–

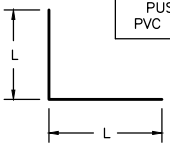

90° HORIZONTAL BEND

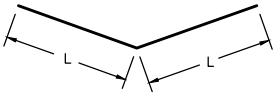

HORIZONTAL BENDS

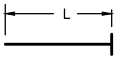

PLUG

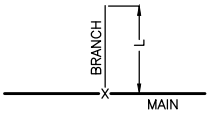

TEE

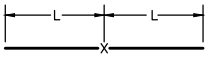

VALVE

NOTES:

1. LENGTHS OF RESTRAINT ARE MEASURED EACH WAY FROM BENDS.
2. CLAMPS AND RODS ARE NOT ALLOWED FOR 24" AND LARGER MAINS.
3. D=DIAMETER,L=LENGTH,G=GRADE M.S.=MILD STEEL,H.S.=HIGH STRENGTH
4. MIN. 4.5' COVER (POTABLE), 5.5' COVER (IRRIGATION).
5. TABLE BASED ON 150 PSI INTERNAL PRESSURE.
6. M.S. MEANS MILD STEEL ROD A.S.T.M. STANDARD DESIGNATION A-36.
7. H.S. MEANS HIGH STRENGTH ROD A.S.T.M. STANDARD DESIGNATION A-193 GRADE B-7.
8. NUTS SHALL BE A.S.T.M. STANDARD DESIGNATION A-307 GRADE A OR B HEXAGON HEAVY SERIES.
9. LENGTH REFERS TO THE AMOUNT OF MAIN WHICH MUST BE TIED TOGETHER AND IS NOT NECESSARILY THE LENGTH OF THE RODS.
10. LENGTH OF TIED MAIN ALSO APPLIES TO THE LENGTH OF MAIN RESTRAINED BY MEGALUGS.
11. TEES AND CROSSES MUST BE RESTRAINED IN ALL APPLICABLE DIRECTIONS.
12. ALL REDUCERS/INCREASERS SHALL HAVE MECHANICAL RESTRAINT DEVICES ON EACH SIDE OF THE FITTING.
13. PIPE JOINT RESTRAINT MAY BE ACCOMPLISHED USING HARNESS RODS, MECHANICAL JOINT RESTRAINT OR RESTRAINED JOINT PIPE AND FITTINGS.
14. USE 2 RODS ON 12" AND SMALLER MAINS, 4 RODS ON 16" MAINS AND 6 RODS ON 20" MAINS.
15. RESTRAINT ON VERTICAL BENDS SHALL BE AS INDICATED ON THE "WATER MAIN LOWERING" DETAIL.
16. AN ANALYSIS OF THE NECESSARY RESTRAINT LENGTH FOR PIPE LARGER THAN 24" SHALL BE SUBMITTED TO THE DISTRICT FOR REVIEW AND APPROVAL ON A CASE BY CASE BASIS.
17. AS AN ALTERNATE TO BRANCH RESTRAINT ON A TEE USING THE ABOVE TABLE, THE MAIN MAY BE RESTRAINED INSTEAD FOR THE FOLLOWING DISTANCES IN EACH DIRECTION FROM THE TEE, PROVIDED THAT THE BRANCH IS RESTRAINED AT THE CONNECTION WITH THE TEE AND THE BRANCH SIZE DOES NOT EXCEED THE MAIN SIZE.

SIZE OF MAIN	4"	6"	8"	12"	16"	20"	24"
RESTRAINT LENGTH (EACH DIRECTION)	5.0'	6.0'	8.0'	11.0'	14.0'	17.0'	19.0'

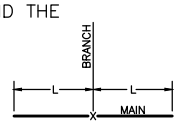

TEE

REVISIONS:
6/7/00
2/1/01
8/1/02
7/13/11

SOUTH ADAMS COUNTY WATER AND SANITATION DISTRICT

RESTRAINED PIPE LENGTHS

W-6

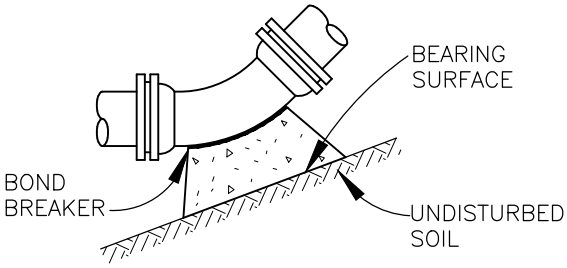

11–1/4, 22–1/2, 45° AND
90° HORIZONTAL BENDS

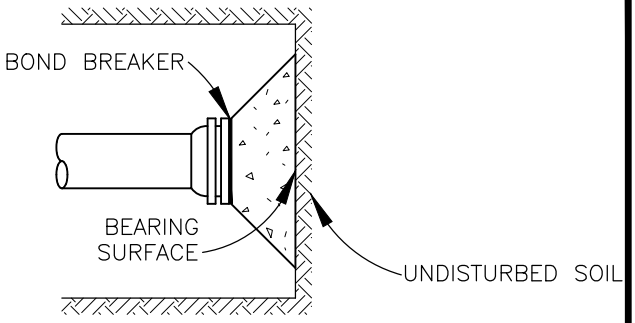

DEAD END

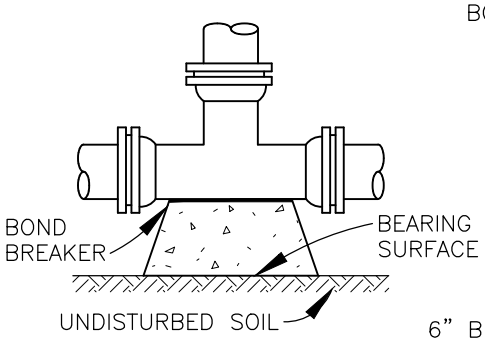

TEE

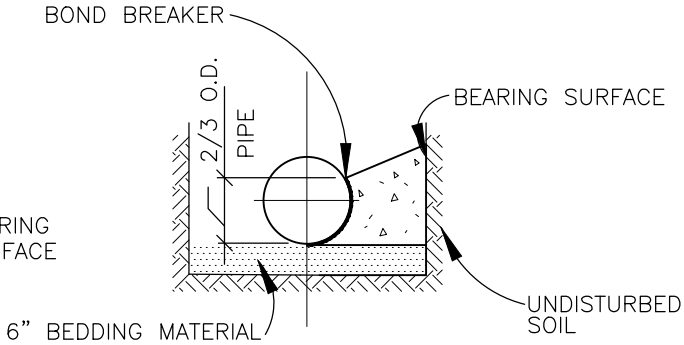

TYPICAL CROSS SECTION

NOTES:

1. BEARING SURFACES SHOWN IN TABLE ARE MINIMUMS.
2. TABLE IS BASED ON 150 PSI INTERNAL PIPE PRESSURE PLUS WATER HAMMER.
   4", 6", AND 12" WATER HAMMER = 110 PSI
   16", 20", AND 24" WATER HAMMER = 70 PSI
3. TABLE IS BASED ON 3,000 P.S.F. SOIL BEARING CAPACITY.
4. AN ANALYSIS OF THE NECESSARY KICK BLOCK SIZE FOR PIPE LARGER THAN 24" SHALL BE SUBMITTED TO THE DISTRICT FOR REVIEW AND APPROVAL ON A CASE BY CASE BASIS.

MINIMUM BEARING SURFACE AREA

(IN SQUARE FEET)

SIZE OF MAIN	HORIZONTAL BENDS				TEE OR DEAD END PLUG
	11–1/4°	22–1/2°	45°	90°	
4"	0.0	1.00	1.00	2.50	1.50
6"	0.0	1.25	2.25	5.00	3.00
8"	0.0	2.00	4.00	8.00	5.25
12"	2.25	4.50	8.75	16.25	11.25
16"	3.75	7.50	14.50	24.00	19.00
20"	5.00	10.00	19.50	35.50	25.00
24"	7.00	14.00	27.75	51.00	36.00

REVISIONS:
6/7/00
2/1/01
8/1/02
7/13/11

SOUTH ADAMS COUNTY
WATER AND SANITATION DISTRICT

CONCRETE THRUST BLOCKS

W-7

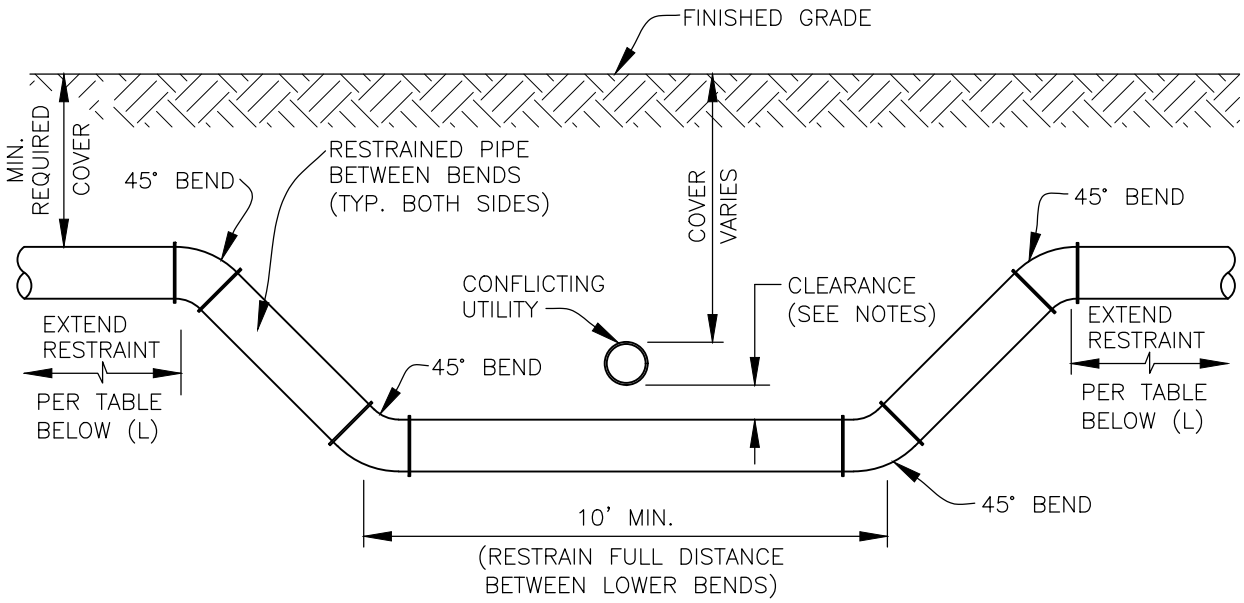

RESTRAINT LENGTH IN EACH DIRECTION FROM UPPER BENDS SHALL BE AS FOLLOWS:

SIZE OF PIPE	4"	6"	8"	12"	16"	20"	24"
L (FEET)	16.0'	23.0'	30.0'	43.0'	56.0'	68.0'	80.0'

NOTES:

1. VALVES SHALL NOT BE INSTALLED ON POTABLE AND IRRIGATION WATER MAINS BETWEEN THE UPPER TWO VERTICAL BENDS OF THE LOWERED SECTION.
2. CLEARANCE FROM IRRIGATION WATER MAINS TO SANITARY OR STORM SEWERS SHALL BE 12".
3. CLEARANCE FROM POTABLE WATER MAINS TO SANITARY SEWERS, STORM SEWERS, OR IRRIGATION WATER MAINS SHALL BE 18".
4. IN THE EVENT THAT A NEW SANITARY SEWER IS UNABLE TO CROSS AN EXISTING POTABLE OR IRRIGATION WATER MAIN WITH REQUIRED CLEARANCE, MODIFICATIONS AT THE CROSSING SHALL BE IN CONFORMANCE WITH DETAIL G-3. THE WATER LINE PIPE SHALL ALSO BE DUCTILE IRON PIPE.
5. CONFIGURATIONS UTILIZING BENDS OTHER THAN 45° MAY BE SUBMITTED TO THE DISTRICT FOR REVIEW AND APPROVAL ON A CASE BY CASE BASIS.

REVISIONS:
6/7/00
2/1/01
8/1/02
7/13/11
10/7/15

SOUTH ADAMS COUNTY
WATER AND SANITATION DISTRICT

WATER MAIN LOWERING ON A NEW WATER MAIN INSTALLATION

W-8

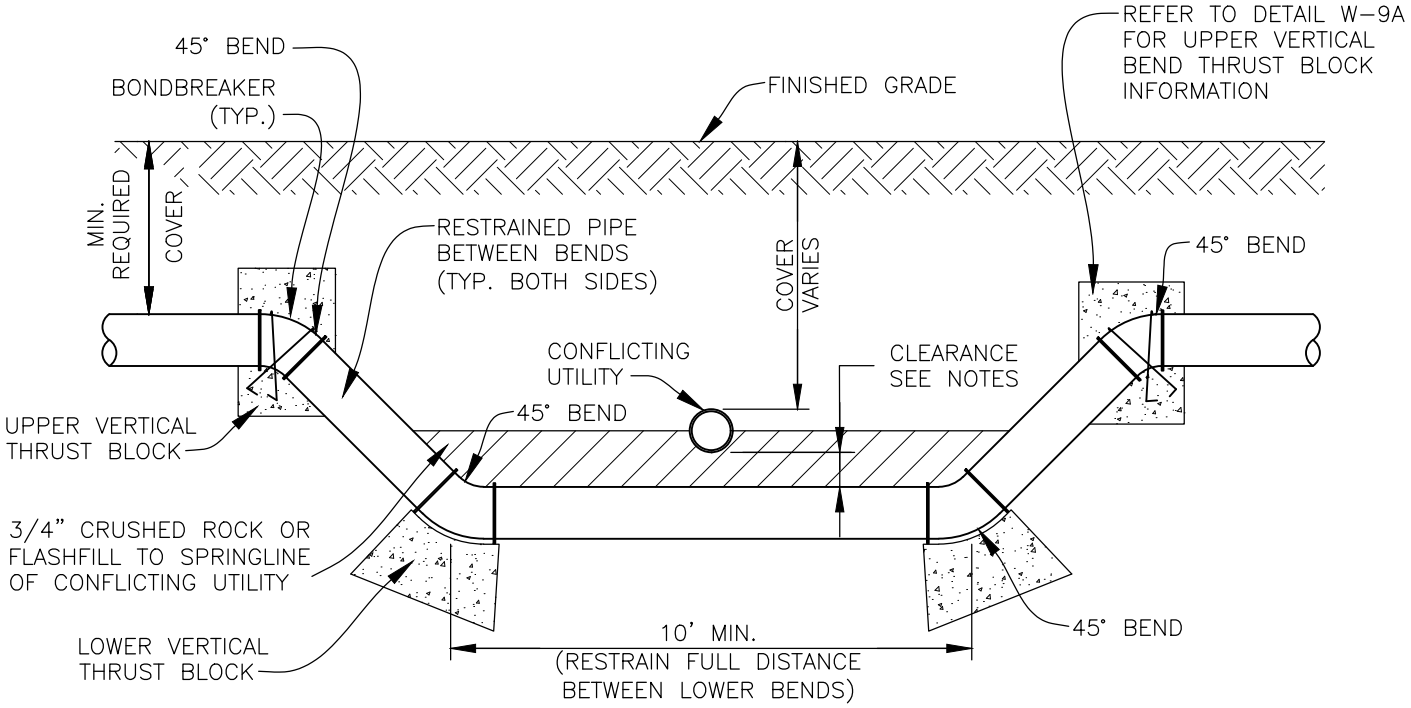

NOTES:

1. VALVES SHALL NOT BE INSTALLED ON POTABLE AND IRRIGATION WATER MAINS BETWEEN THE UPPER TWO VERTICAL BENDS OF THE LOWERED SECTION.
2. CLEARANCE FROM IRRIGATION WATER MAINS TO SANITARY OR STORM SEWERS SHALL BE 12".
3. CLEARANCE FROM POTABLE WATER MAINS TO SANITARY SEWERS, STORM SEWERS, OR IRRIGATION WATER MAINS SHALL BE 18".
4. IN THE EVENT THAT A NEW SANITARY SEWER IS UNABLE TO CROSS AN EXISTING POTABLE OR IRRIGATION WATER MAIN WITH REQUIRED CLEARANCE, MODIFICATIONS AT THE CROSSING SHALL BE IN CONFORMANCE WITH DETAIL G-3. THE WATER LINE PIPE SHALL ALSO BE DUCTILE IRON PIPE.
5. CONFIGURATIONS UTILIZING BENDS OTHER THAN 45° MAY BE SUBMITTED TO THE DISTRICT FOR REVIEW AND APPROVAL ON A CASE BY CASE BASIS.
6. REVERSE KICK BLOCKS SHALL BE USED ON THE TOP BENDS WHEN A LOWERING IS INSTALLED ON AN EXISTING WATER LINE.
7. THE MECHANICAL JOINT BEND SHALL BE WRAPPED IN POLYWRAP PRIOR TO THE REVERSE KICK BLOCK INSTALLATION.

REVISIONS:	SOUTH ADAMS COUNTY WATER AND SANITATION DISTRICT	W-9
7/13/11		
10/7/15	WATER MAIN LOWERING ON AN EXISTING WATER MAIN	

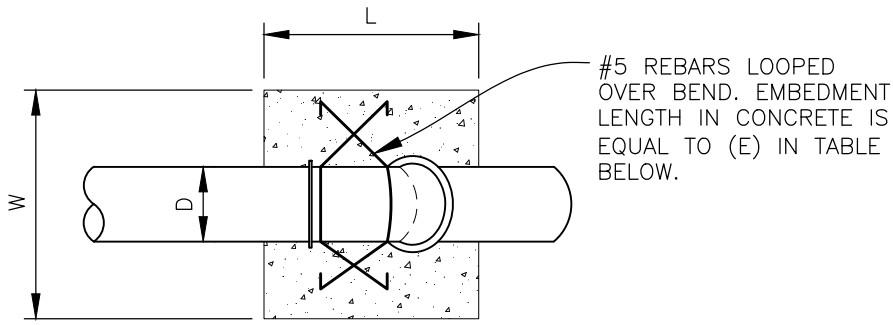

PLAN

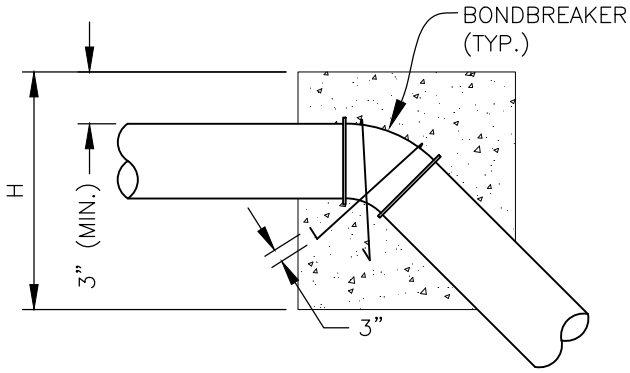

PROFILE

SIZE OF PIPE (D)	11¼ DEG.					22½ DEG.					45 DEG.				
	L"	W"	H"	E"	VOL	L"	W"	H"	E"	VOL	L"	W"	H"	E"	VOL
4"	12	24	24	12	4	12	34	34	12	8	22	37	32	22	15
6"	18	32	27	18	9	15	52	40	15	18	28	64	32	28	33
8"	21	40	33	21	16	22	61	40	22	31	35	64	45	35	58
10"	24	50	36	24	25	30	59	48	30	49	42	72	52	42	90
12"	31	56	36	31	36	36	70	48	36	70	45	80	62	45	129

NOTES:

1. VOLUME IS IN CUBIC FEET.
2. ALL CONCRETE TO BE 2,500 P.S.I. MIN.
3. BLOCKS TO BE CENTERED HORIZONTALLY ON THE BEND.
4. DESIGN BASED ON A TEST PRESSURE OF 150 P.S.I. AND SAFETY FACTOR (S_f) of 1.5
5. $V_g = \frac{S_f \text{ PA SIN } \theta}{W_m}$
6. W_m = 140 LBS / FT^3

THE DESIGN ENGINEER IS RESPONSIBLE FOR VERIFYING THE ACTUAL SITE CONDITIONS WITH RESPECT TO THE ASSUMPTIONS LISTED ABOVE.

REVISIONS:
4/20/16

SOUTH ADAMS COUNTY WATER AND SANITATION DISTRICT

UPPER VERTICAL BEND THRUST BLOCK

W-9A

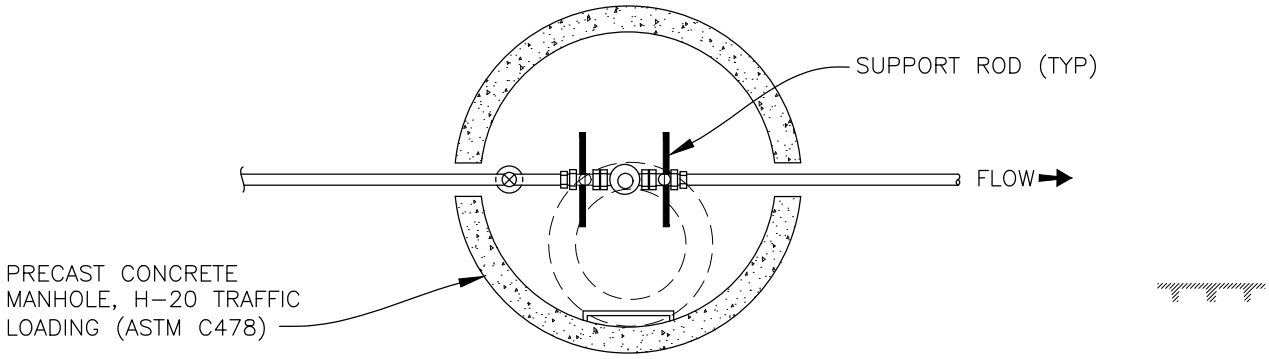

MANHOLE PLAN

N.T.S.

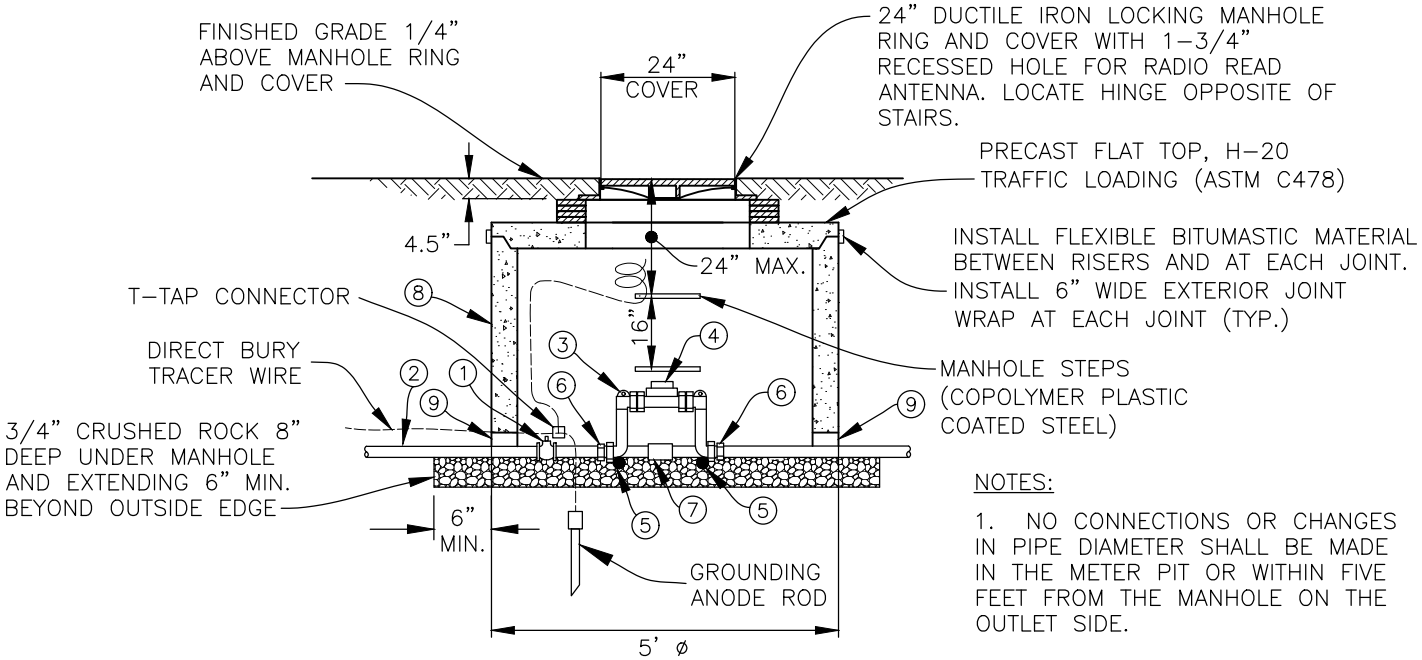

MANHOLE ELEVATION

N.T.S.

COMPONENTS:

1. CURB STOP VALVE
2. CLASS 200 CTS POLYETHYLENE RATED FOR POTABLE WATER SERVICE.
3. 15" HIGH METER SETTER (YOKE)
4. DISPLACEMENT TYPE MAGNETIC DRIVE METER.
5. 1" X 18" STABILIZING PIPE.
6. INSTALL METER SETTER PER THE APPROVED MATERIALS LIST.
7. 1–1/2" BYPASS FOR 1–1/2" SETTERS, 2" BYPASS FOR 2" SETTERS. BYPASS SHALL INCLUDE BALL VALVE WITH LOCKING WINGS.
8. 5' I.D. CONCRETE MANHOLE (ASTM C478).
9. KNOCKOUTS SHALL BE PERMANENTLY SEALED WITH SPRAY FOAM INSULATION.

NOTES:

1. NO CONNECTIONS OR CHANGES IN PIPE DIAMETER SHALL BE MADE IN THE METER PIT OR WITHIN FIVE FEET FROM THE MANHOLE ON THE OUTLET SIDE.

2. BACKFLOW PREVENTION DEVICE DOWNSTREAM FROM MANHOLE SHALL BE IN ACCORDANCE WITH THE DISTRICT'S "CROSS– CONNECTION CONTROL AND BACKFLOW CONTROL POLICY AND REGULATIONS" (IRRIGATION SERVICES).

3. TRACER WIRE SHALL BE TERMINATED IN EACH METER MANHOLE BY WRAPPING THE WIRE THREE TIMES AROUND THE TOP STEP TO HAVE 18" OF TRACER WIRE TO EXTEND OUT OF MANHOLE.

4. A GROUNDING ANODE ROD SHALL BE INSTALLED IN THE METER VAULT BENEATH THE CRUSHED ROCK OFFSET A MINIMUM OF 1 FOOT FROM THE CENTERLINE OF PIPE AND CONNECT TO THE TRACER WIRE WITH A T–TAP CONNECTOR.

REVISIONS:	SOUTH ADAMS COUNTY WATER AND SANITATION DISTRICT	W-10
11/18/02 7/13/11 2/24/16 1/27/17	1-1/2" THROUGH 2" METER MANHOLE	

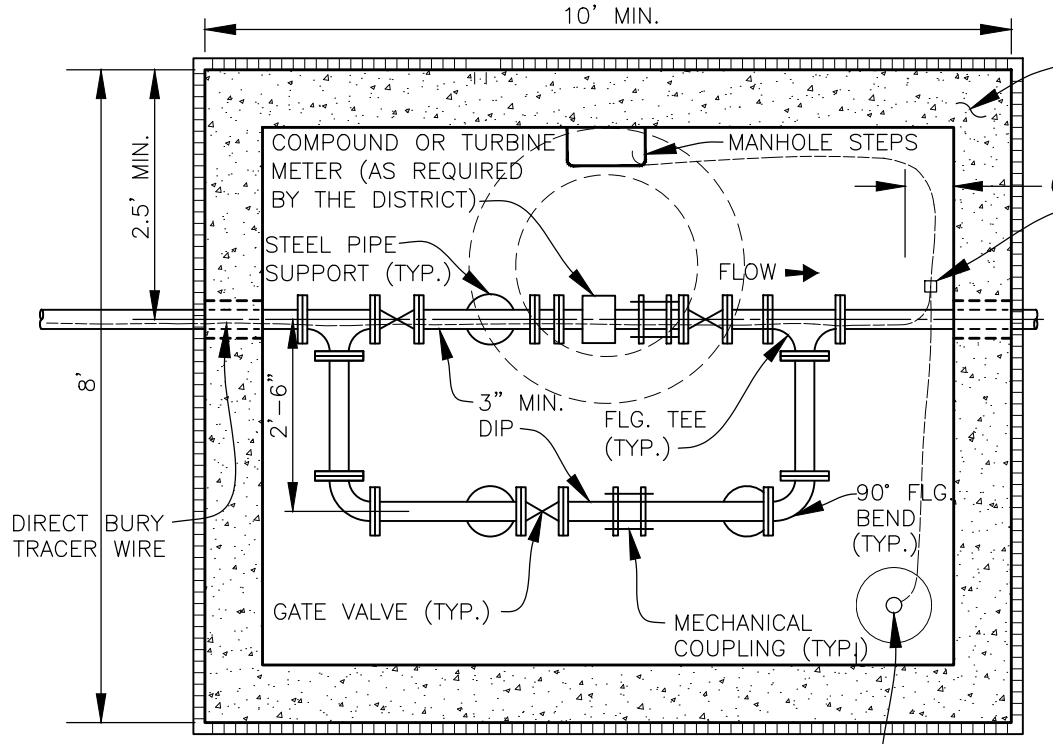

METER VAULT PLAN
N.T.S.

NOTES:

1. PROVIDE CAST-OUT HOLES IN VAULT WALLS.
2. RESTRAIN FITTING ENDS WITH MEGALUGS OR EQUAL.
3. ALL PIPING FOR METER VAULTS SHALL BE DUCTILE IRON (DIP).
4. BACKFLOW PREVENTION DEVICE DOWNSTREAM FROM VAULT SHALL BE IN ACCORDANCE WITH DISTRICT'S "CROSS-CONNECTION CONTROL AND BACKFLOW CONTROL POLICY AND REGULATIONS" (IRRIGATION SERVICES).
5. TRACER WIRE SHALL BE TERMINATED IN EACH METER VAULT BY WRAPPING THE WIRE THREE TIMES AROUND THE TOP STEP SO THAT 18" OF WIRE WILL EXTEND OUT OF THE RING AND COVER.
6. A GROUNDING ANODE ROD SHALL BE INSTALLED INSIDE THE VAULT. OFFSET A MINIMUM OF 1 FOOT FROM CENTERLINE OF THE PIPE, IN COMBINED SYSTEM AREAS. IN DUAL SYSTEM AREAS, AN ELECTRONIC MARKING DEVICE SHALL BE INSTALLED OUTSIDE THE VAULT.

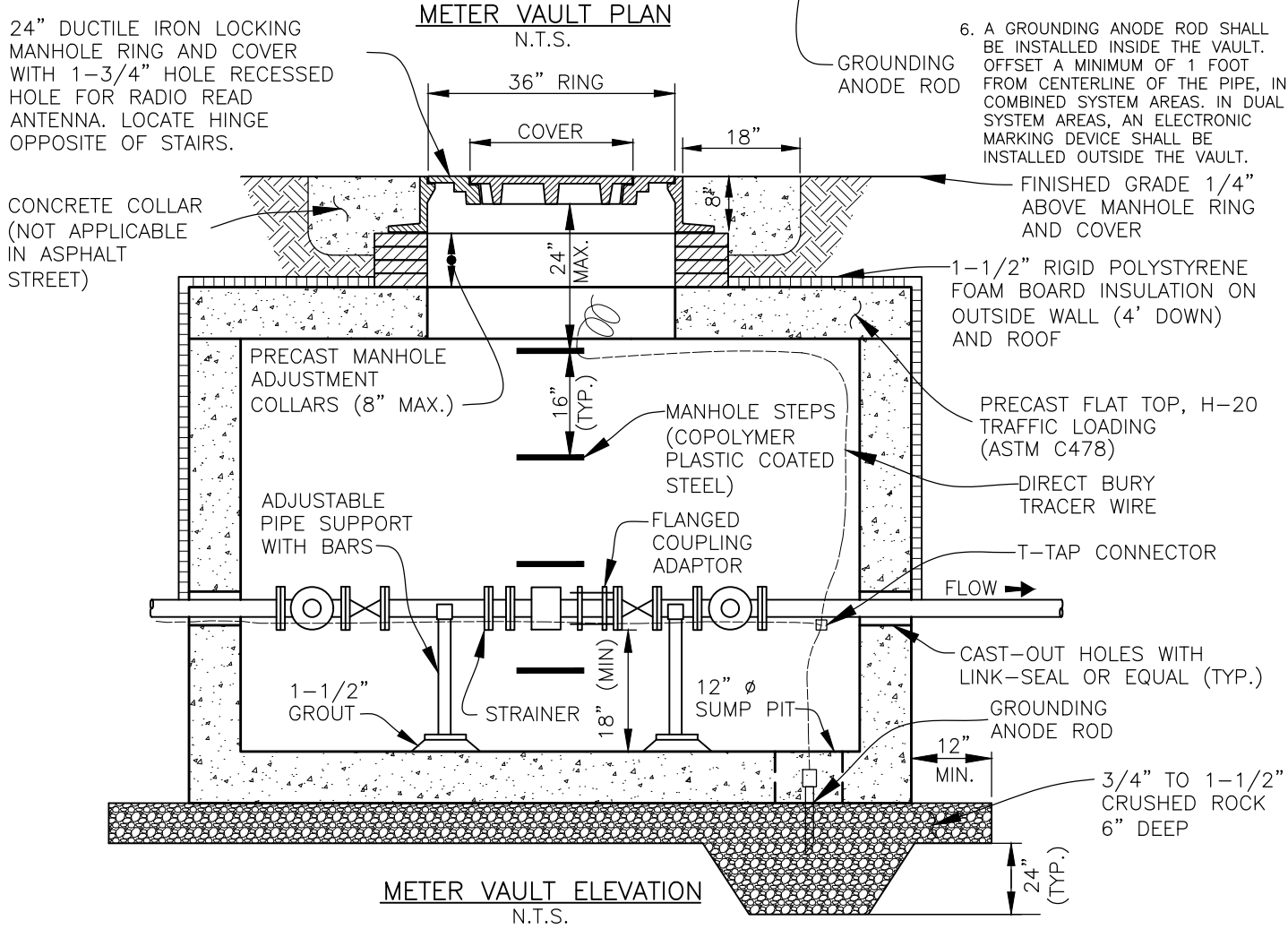

METER VAULT ELEVATION
N.T.S.

REVISIONS:	SOUTH ADAMS COUNTY WATER AND SANITATION DISTRICT	W-11
11/18/02		
7/13/11		
2/17/16	3" AND LARGER METER VAULT	
1/27/17		

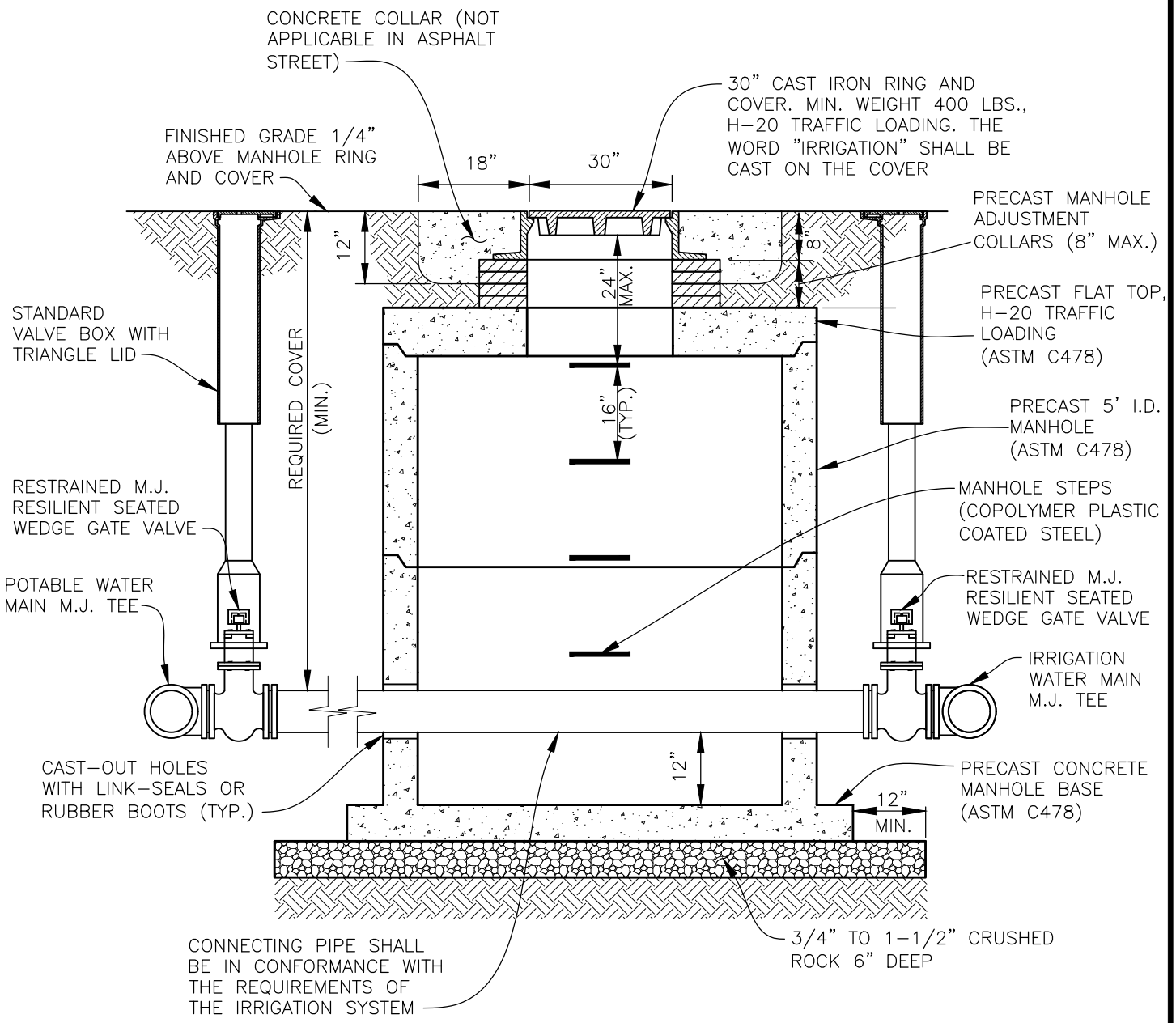

NOTES:

1. ALL FITTINGS AND JOINTS SHALL BE RESTRAINED BETWEEN POTABLE AND IRRIGATION WATER MAIN TEES. RESTRAINT USING TIE RODS SHALL NOT BE ALLOWED.
2. CONNECTING PIPE BETWEEN POTABLE AND IRRIGATION MAIN TEES SHALL BE CONSTRUCTED HORIZONTALLY WITHOUT CHANGES IN SIZE.
3. VALVE SHALL BE REQUIRED ON IRRIGATION WATER MAIN DOWNSTREAM FROM TEE.

REVISIONS:	SOUTH ADAMS COUNTY WATER AND SANITATION DISTRICT	W-12
2/1/01		
8/1/02		
7/13/11	TEMPORARY CONNECTION BETWEEN POTABLE AND IRRIGATION WATER DISTRIBUTION SYSTEMS	

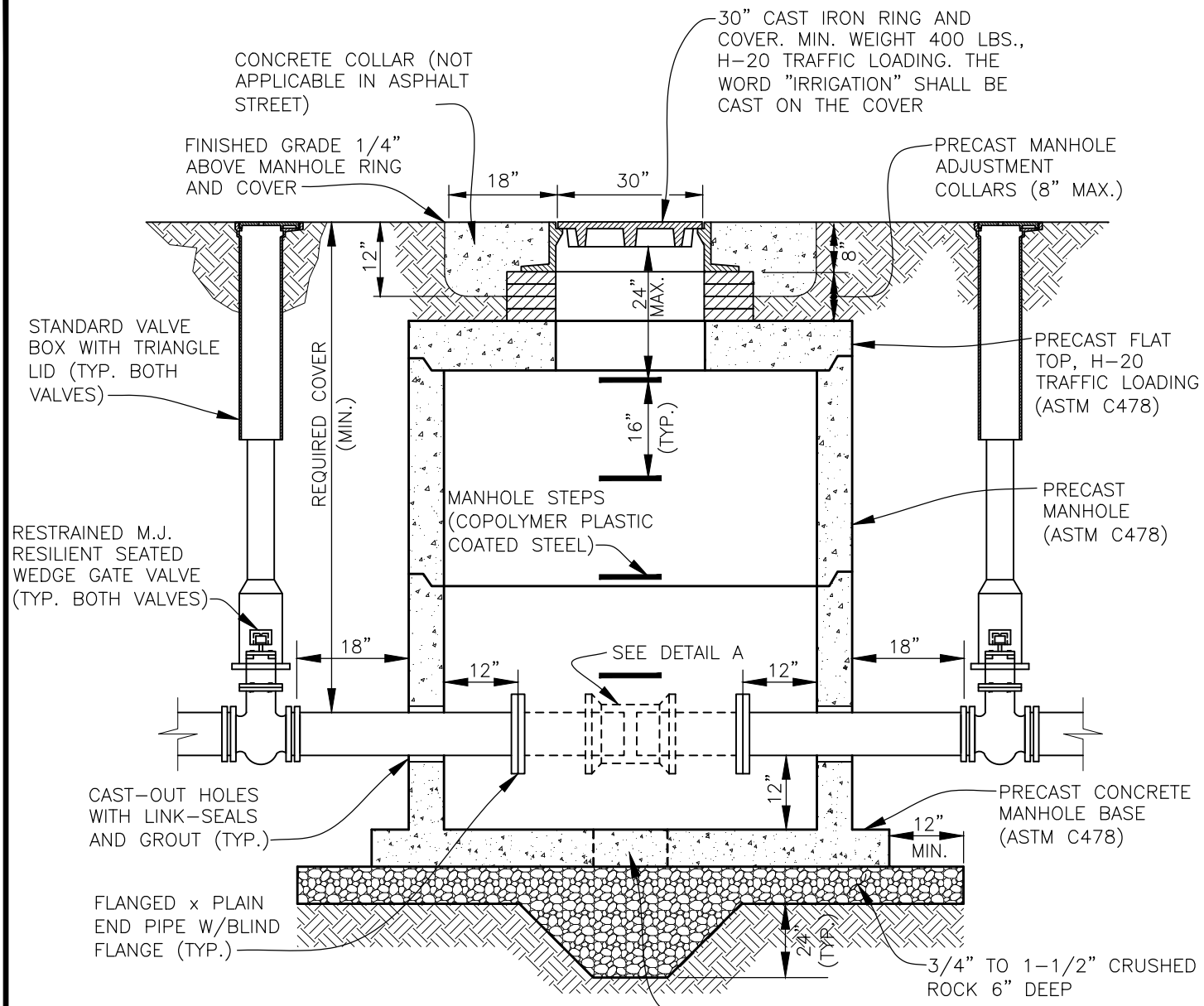

NOTES:

1. THE WATER LINE SHALL BE RESTRAINED THE REQUIRED DEAD-END LENGTH IN BOTH DIRECTIONS, PER DETAIL W-5.
2. TWO FLANGED x PLAIN END PIPES SHALL BE INSTALLED BETWEEN THE TWO DEAD-END LINES INITIALLY WITH AN MJ SOLID SLEEVE TO ENSURE THE PIPES ARE IN LINE. THE PIECES SHALL THEN BE REMOVED AND LEFT IN THE MANHOLE FOR FUTURE USE.
3. A 5' I.D. MANHOLE SHALL BE USED FOR 8" AND SMALLER WATER LINES. A 6' I.D. MANHOLE SHALL BE USED FOR 12" AND LARGER WATER LINES.
4. THE VALVES SHALL REMAIN CLOSED AFTER TESTING OF THE WATER LINES.
5. FUTURE CONNECTION MANHOLE ONLY TO BE INSTALLED WITH WRITTEN APPROVAL OF THE DISTRICT.

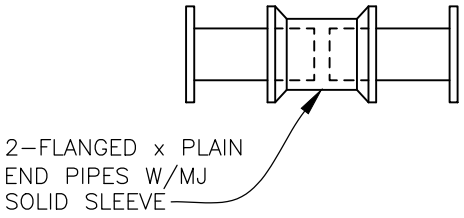

DETAIL A

REVISIONS:	SOUTH ADAMS COUNTY WATER AND SANITATION DISTRICT	W-13
7/13/11	FUTURE CONNECTION MANHOLE FOR IRRIGATION WATER SYSTEMS	

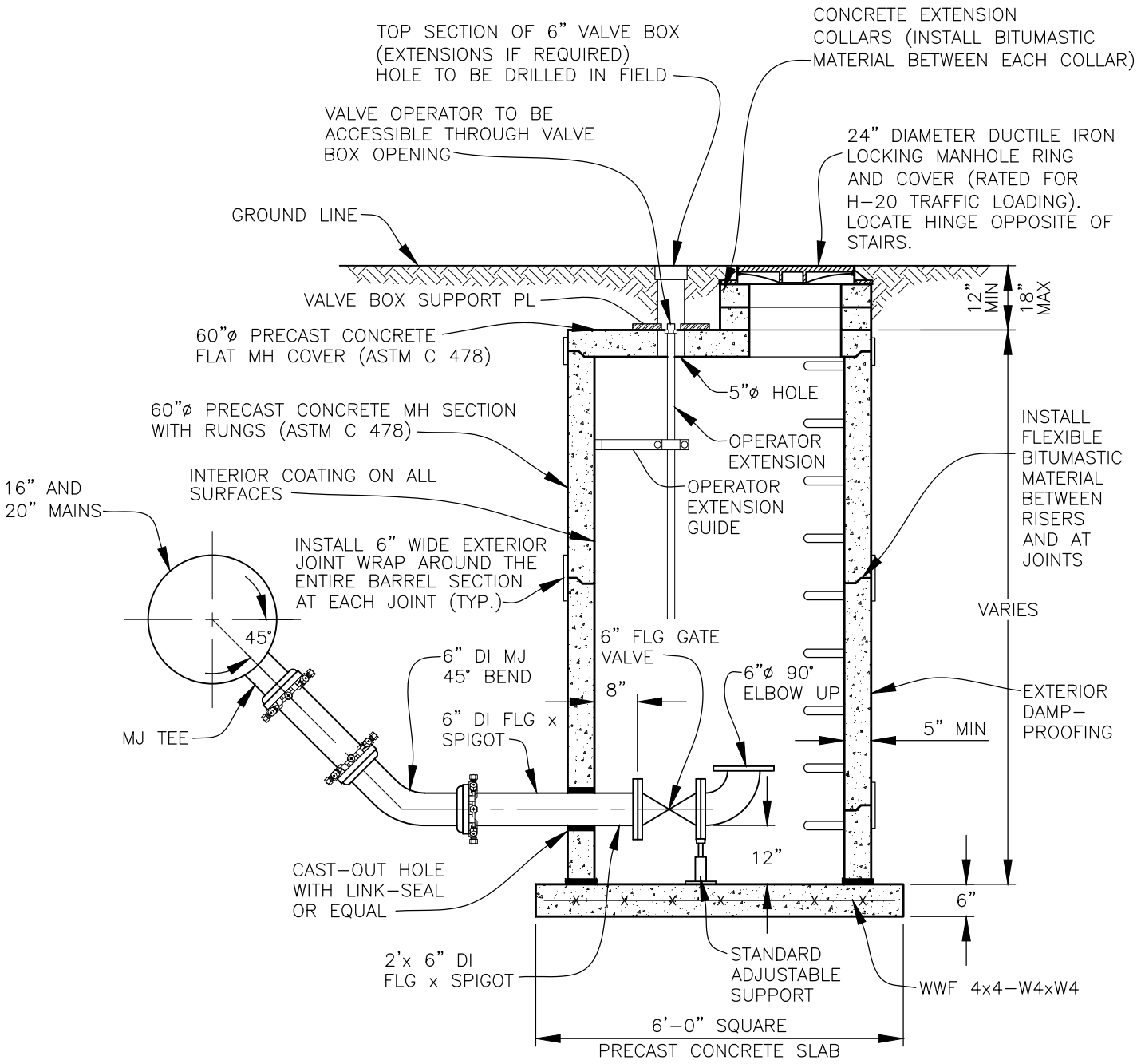

ELEVATION

N.T.S.

REVISIONS:	SOUTH ADAMS COUNTY WATER AND SANITATION DISTRICT	W-14
7/13/11	TRANSMISSION MAIN BLOWOFF INSTALLATION	

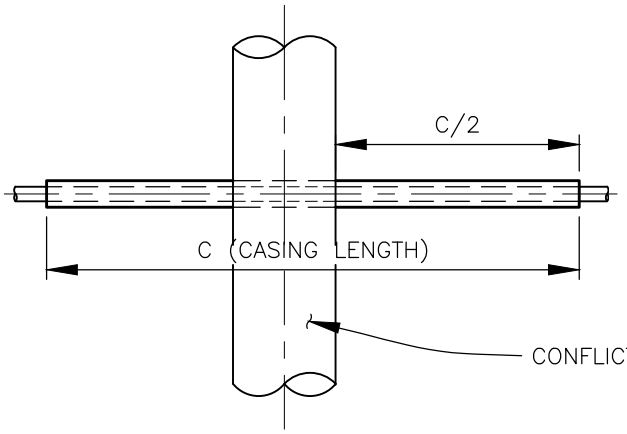

PLAN
FOR PERPENDICULAR CROSSING

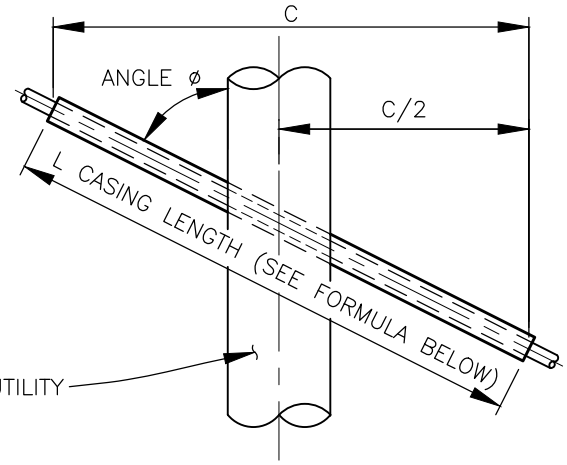

PLAN
FOR ANGLE CROSSING

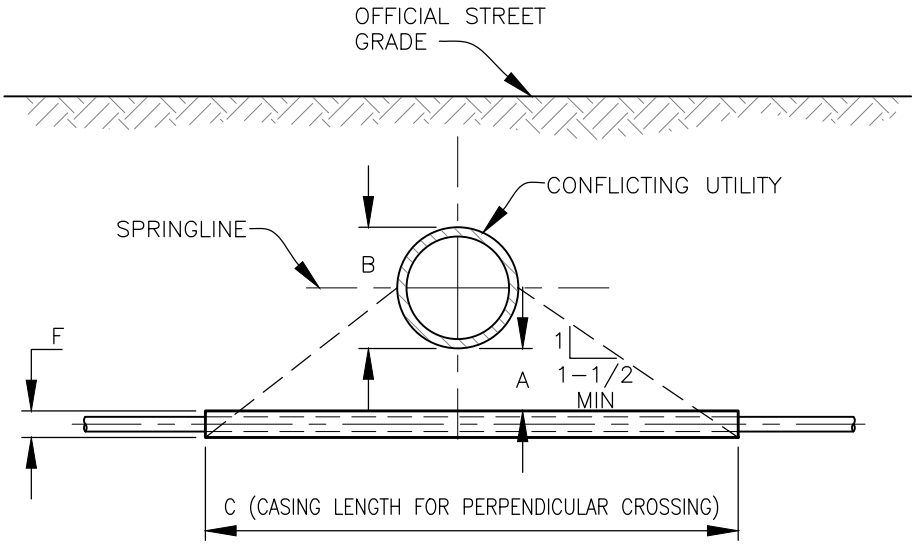

PROFILE

FORMULA FOR FINDING C:

$$C = B+(2)(1.5)\left[\frac{B}{2}+A+F\right]$$

- C — PERPENDICULAR CROSSING CASING LENGTH
- B — OD CONFLICTING UTILITY
- (2) — CONSTANT
- (1.5) — RATIO OF MIN SLOPE
- B/2 — 1/2 OD CONFLICTING UTILITY
- A — VERTICAL DISTANCE BETWEEN CASING AND CONFLICTING UTILITY.
- F — CASING OD

FORMULA FOR FINDING L:

$$L=\frac{C}{\sin \phi}$$

NOTES:

1. FINAL APPROVAL OF BORING AND CASING METHOD AND MATERIALS SHALL BE OBTAINED FROM THE ENGINEER PRIOR TO CONSTRUCTION.
2. SOIL AT ENDS OF CASING SHALL BE STABLE AT ALL TIMES.
3. CATHODIC PROTECTION SHALL BE PROVIDED FOR STEEL CASING AS REQUIRED BY THE ENGINEER.
4. CASING PIPE SHALL BE ONE PIECE, STRAIGHT, ROUND AND OF NEW MATERIAL.

REVISIONS:	SOUTH ADAMS COUNTY WATER AND SANITATION DISTRICT	W-15
7/13/11	BORED CROSSING BENEATH CONDUITS	

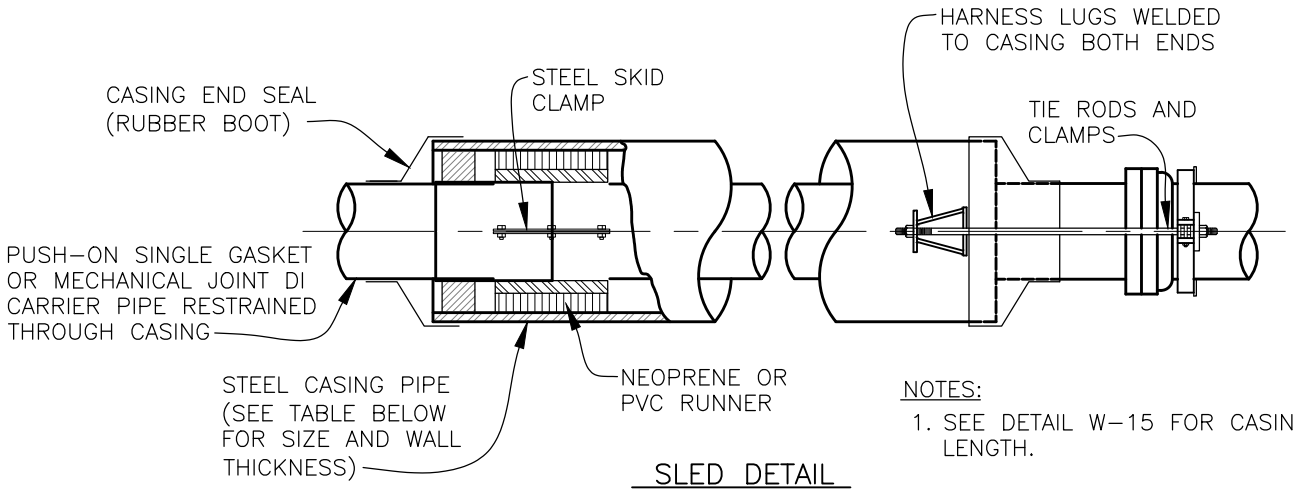

SLED DETAIL

NOTES:

1. SEE DETAIL W-15 FOR CASING LENGTH.
2. HARNESS LUGS TO BE INSULATED FROM DI PIPE (SEE DETAIL W-17).

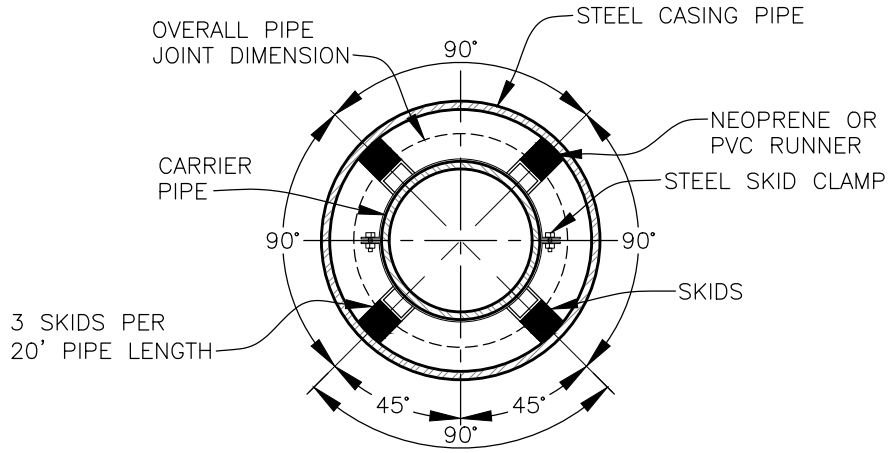

PIPE CASING DETAIL

CARRIER PIPE NOMINAL ø	CASING PIPE	
	MIN OD	MIN WALL THICKNESS
4"	12"	0.188"
6"	16"	0.25"
8"	18"	0.282"
12"	24"	0.344"
15-20"	30"	0.406"
24"	36"	0.562"

NOTE:

1. TRENCH LAID CASINGS SHALL BE DESIGNED AND INSTALLED TO CONDUIT STANDARDS.
2. FOR OPEN CUT INSTALLATION, PIPE BEDDING MUST BE A MINIMUM OF 6" UNDER PIPE AND 6" OVER PIPE.

REVISIONS:
7/13/11

SOUTH ADAMS COUNTY WATER AND SANITATION DISTRICT

BORE CASING

W-16

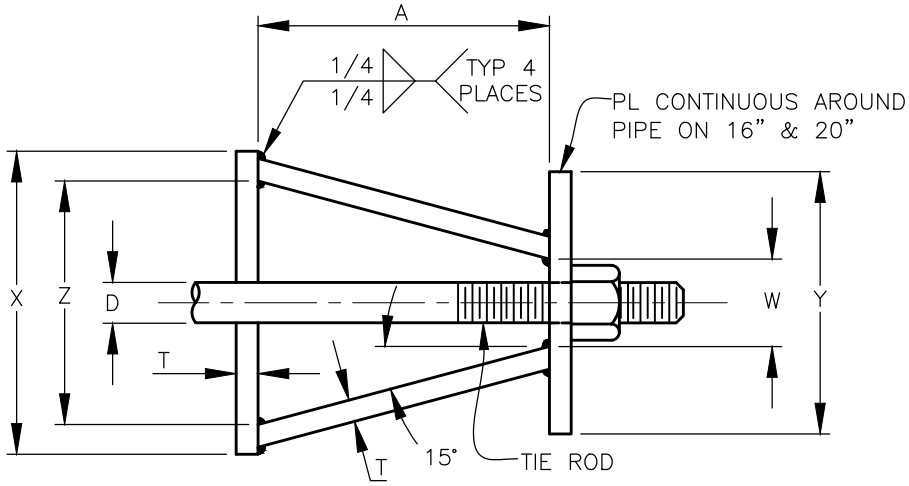

TOP VIEW

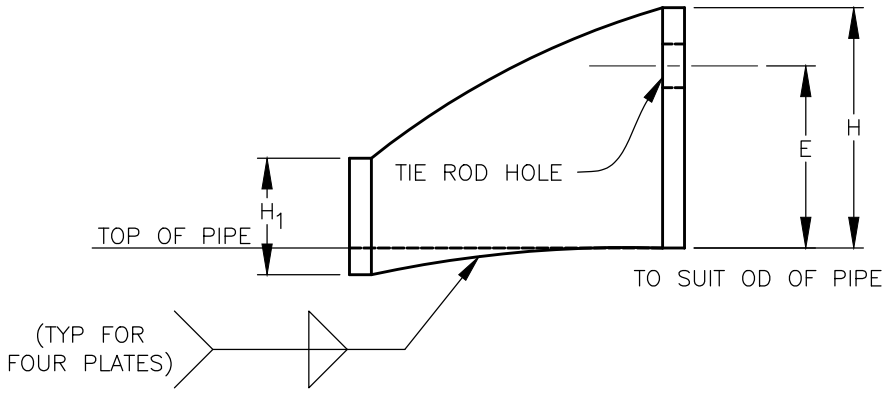

SIDE VIEW

	CARRIER PIPE NOMINAL ø	STUD ø D	A	W	Z	T	H	E	H_1	Y	X
W/O FLANGED LUGS	4" TO 12"	3/4"	5"	1 1/2"	3 3/4"	3/8"	4 1/8"	3 1/8"	2"	4 1/2"	5"
	16"	1"	5 3/4"	1 3/4"	4 1/2"	1/2"	4 1/2"	3 1/4"	2"	RING	6"
	20"	1 1/4"	7 1/2"	2"	5 3/4"	5/8"	5"	3 3/4"	2 1/2"	RING	7 1/2"

NOTES:

1. USE TWO HS STEEL TIE RODS AT END OF CASING.
2. TIE ROD HOLE ø 1/8" LARGER THAN STUD ø.
3. BOTTOM EDGE OF ALL PLATES SHAPED TO FIT OD OF PIPE.
4. HARNESS LUGS AS PER AWWA MANUAL M11.

REVISIONS:
7/13/11

SOUTH ADAMS COUNTY
WATER AND SANITATION DISTRICT

COMBINATION FLANGED
HARNESS LUG

W-17

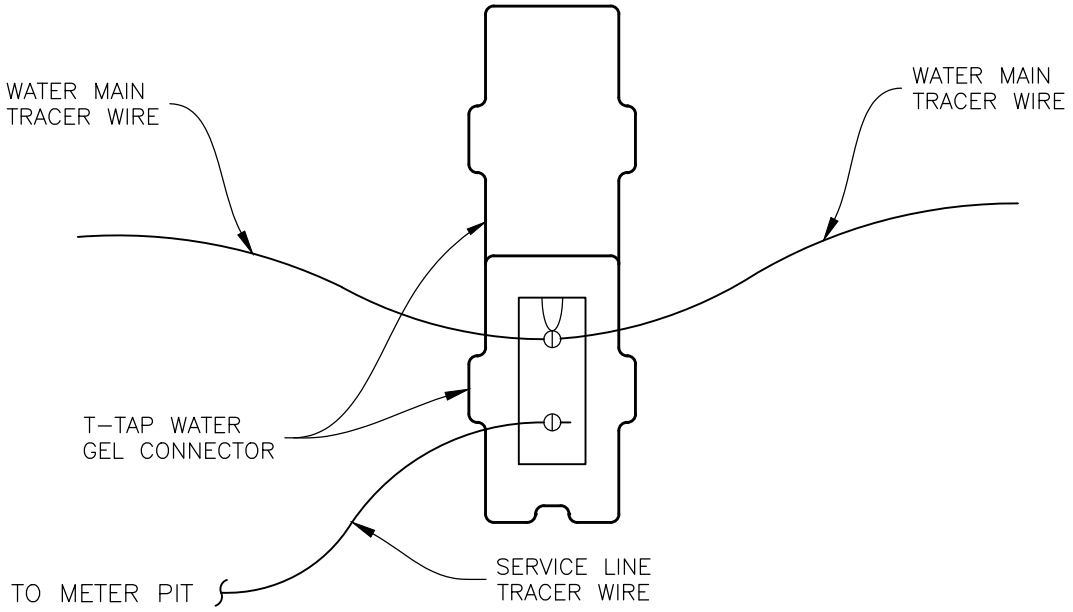

WATER MAIN INSTALLATION

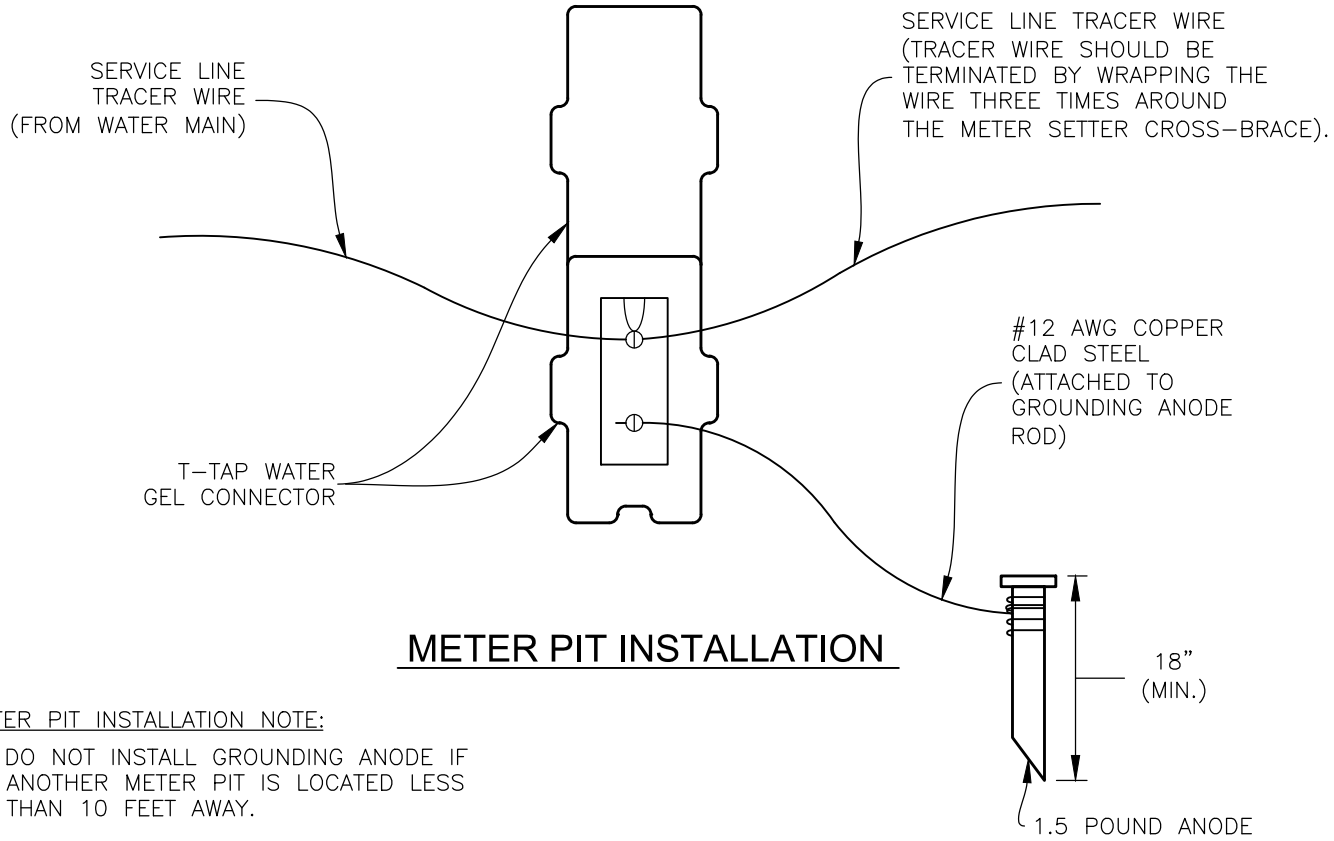

METER PIT INSTALLATION

METER PIT INSTALLATION NOTE:

1. DO NOT INSTALL GROUNDING ANODE IF ANOTHER METER PIT IS LOCATED LESS THAN 10 FEET AWAY.

REVISIONS:	SOUTH ADAMS COUNTY WATER AND SANITATION DISTRICT	W-18
2/24/16	TRACER WIRE CONNECTORS	

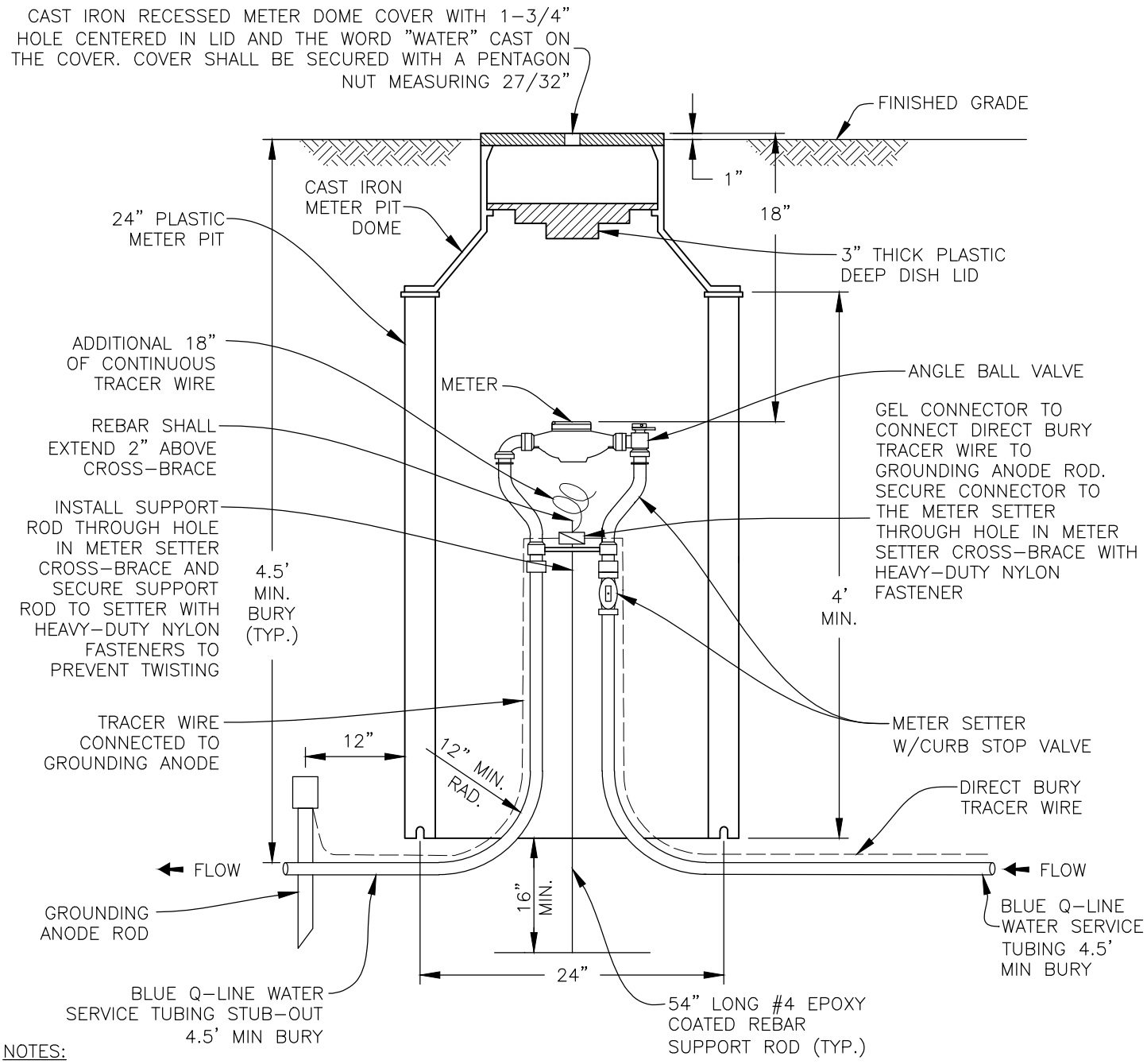

NOTES:

1. THE INNER FROST LID SHALL BE A PLASTIC DEEP DISH LID WITH PRE-DRILLED DRAIN HOLE.

2. IN LIEU OF A 24" DIAMETER PLASTIC METER PIT, A 48" HIGH, 24" DIAMETER CONCRETE PIT WITH 20" DIAMETER TOP OPENING WILL BE ACCEPTABLE. PLASTIC BASES (HALF-INCH MIN. THICK WALLS) SHALL BE IN CONFORMANCE WITH THE DISTRICT'S DESIGN STANDARDS AND SPECIFICATIONS.

3. DIRECT BURY TRACER WIRE SHALL BE TERMINATED IN EACH METER PIT BY WRAPPING THE WIRE THREE TIMES AROUND THE METER SETTER CROSS-BRACE. THE TRACER WIRE CONNECTED TO GROUND ROD SHOULD BE CONNECTED IN THE METER PIT USING A GEL CONNECTOR AT THE TERMINATION AT THE CROSS-BRACE.

4. NO ROCK SHALL BE ALLOWED IN POTABLE WATER METER PITS.

REVISIONS:	SOUTH ADAMS COUNTY WATER AND SANITATION DISTRICT	WP-1
7/13/11	POTABLE WATER METER PIT	
2/4/16	5/8"x3/4" AND 3/4" SIZES	
1/27/17	(NOT APPLICABLE WHERE FIRE SUPPRESSION IS REQUIRED)	
12/13/23		
12/16/24		

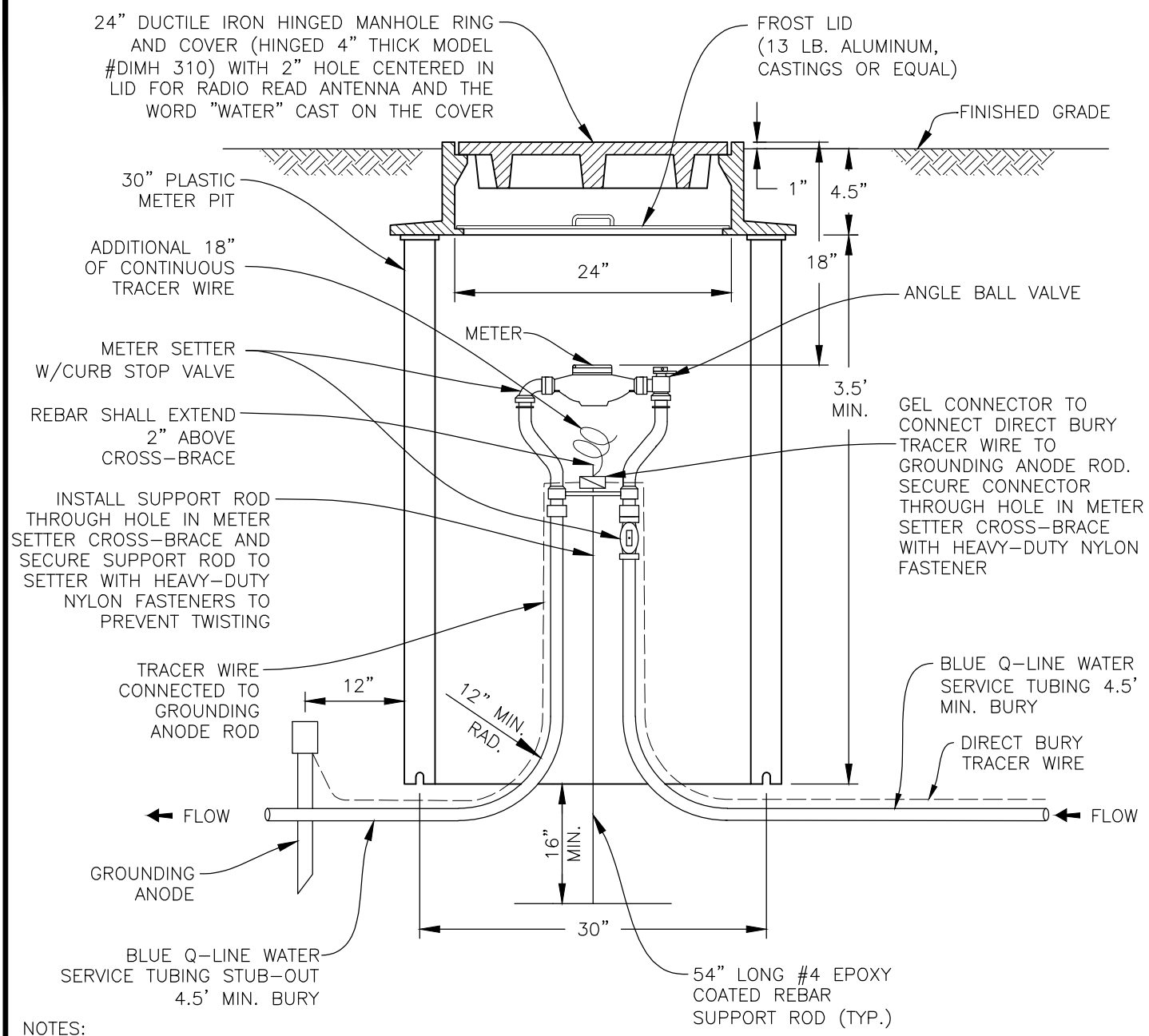

NOTES:

1. IN LIEU OF A 30" DIAMETER PLASTIC METER PIT, A 42" (MIN.) HIGH, 30" DIAMETER CONCRETE PIT WITH 24" DIAMETER TOP OPENING WILL BE ACCEPTABLE. PLASTIC BASES (HALF-INCH MIN. THICK WALLS) SHALL BE IN CONFORMANCE WITH THE DISTRICT'S DESIGN STANDARDS AND SPECIFICATIONS.

2. DIRECT BURY TRACER WIRE SHALL BE TERMINATED IN EACH METER PIT BY WRAPPING THE WIRE THREE TIMES AROUND THE METER SETTER CROSS-BRACE. THE TRACER WIRE AND THE GROUND ROD SHALL BE CONNECTED IN THE METER PIT USING A GEL CONNECTOR AT THE TERMINATION OF THE CROSS-BRACE.

3. NO ROCK SHALL BE ALLOWED IN POTABLE WATER METER PITS.

4. METER PITS THAT ARE LOCATED IN SIDEWALK SHALL HAVE SMOOTH TOP MANHOLE LIDS WITH TRACTION GROOVES.

REVISIONS:	SOUTH ADAMS COUNTY WATER AND SANITATION DISTRICT	WP-2
2/18/16		
1/27/17		
12/13/23	POTABLE WATER METER PIT 1" SIZE (MINIMUM SIZE FOR RESIDENTIAL FIRE SUPPRESSION SYSTEMS)	
12/16/24		

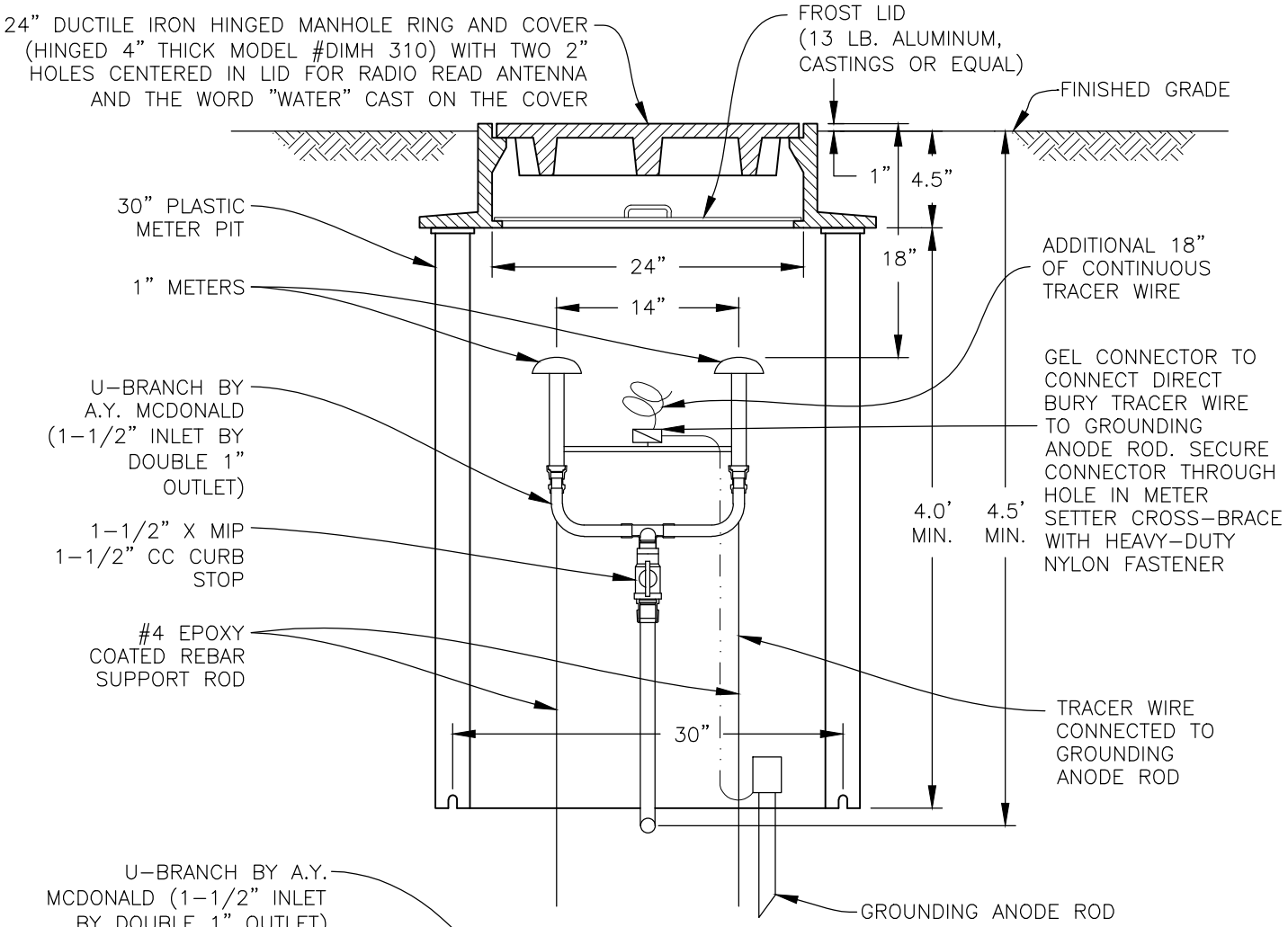

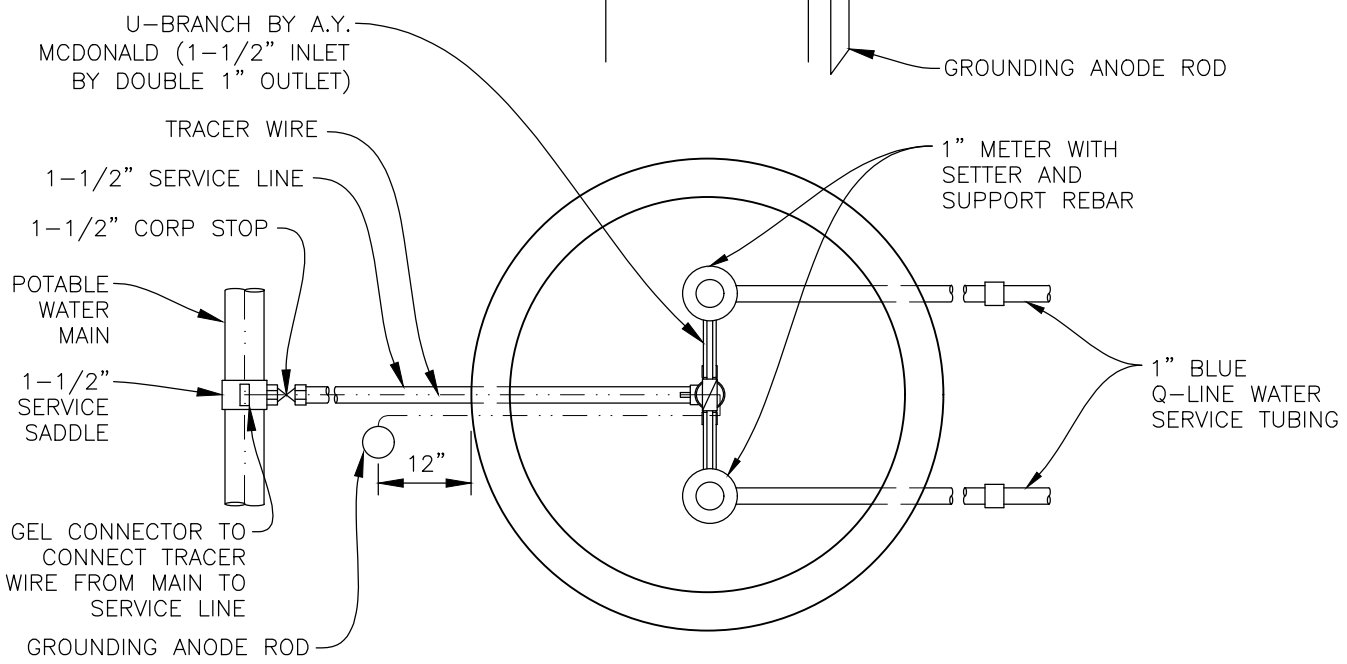

NOTES:

1. MINIMUM 3' BETWEEN BETWEEN METER PITS (EDGE TO EDGE), IF MORE THAN ONE IS INSTALLED.
2. TAP, TRACER WIRE FOR SERVICE LINE PER DETAILS WP-3A AND WP-4A.

REVISIONS: 12/16/24	SOUTH ADAMS COUNTY WATER AND SANITATION DISTRICT	WP-2A
	DUAL SERVICE METER PIT 1" SIZE (FOR RESIDENTIAL FIRE SUPPRESSION SYSTEMS)	

NOTES:

1. ALL SERVICE LINE WORK FROM THE MAIN TO THE BUILDING SHALL BE INSTALLED BY THE CONTRACTOR AND INSPECTED BY THE DISTRICT. PRIOR TO BACKFILLING, ALL PORTIONS OF THE SERVICE LINE TRENCH SHALL BE FILLED WITH BEDDING MATERIAL TO A DEPTH OF 6" OVER THE TOP OF THE SERVICE LINE.

2. DIRECT BURY TRACER WIRE SHALL BE EXTENDED FROM THE MAIN ALONG THE SERVICE LINE AND BE TERMINATED IN THE METER PIT. THE TRACER WIRE SHALL BE CONNECTED TO THE TRACER WIRE GROUNDING ANODE ROD IN THE METER PIT USING A GEL CONNECTOR AT THE TERMINATION AT THE CROSS-BRACE.

3. ALL PORTIONS OF SERVICE LINE FROM THE MAIN TO THE BUILDING SHALL BE CONTINUOUS WITHOUT SPLICES OR FITTINGS EXCEPT FOR THE COMPRESSION COUPLING AT THE END OF THE STUB-OUT, AND CONNECTIONS TO THE METER SETTER. SWEAT CONNECTIONS AND FITTINGS ARE STRICTLY PROHIBITED ALONG THE SERVICE LINE, INCLUDING METER PIT ASSEMBLIES.

4. METER PIT SHALL BE 24" MINIMUM FROM THE CENTER OF THE METER PIT TO THE EDGE OF DRIVEWAY OR CONCRETE SURFACES.

5. METER PIT SHALL BE SET SUCH THAT THE FINAL ELEVATION OF THE LID IS 1" ABOVE THE FINISHED GRADE.

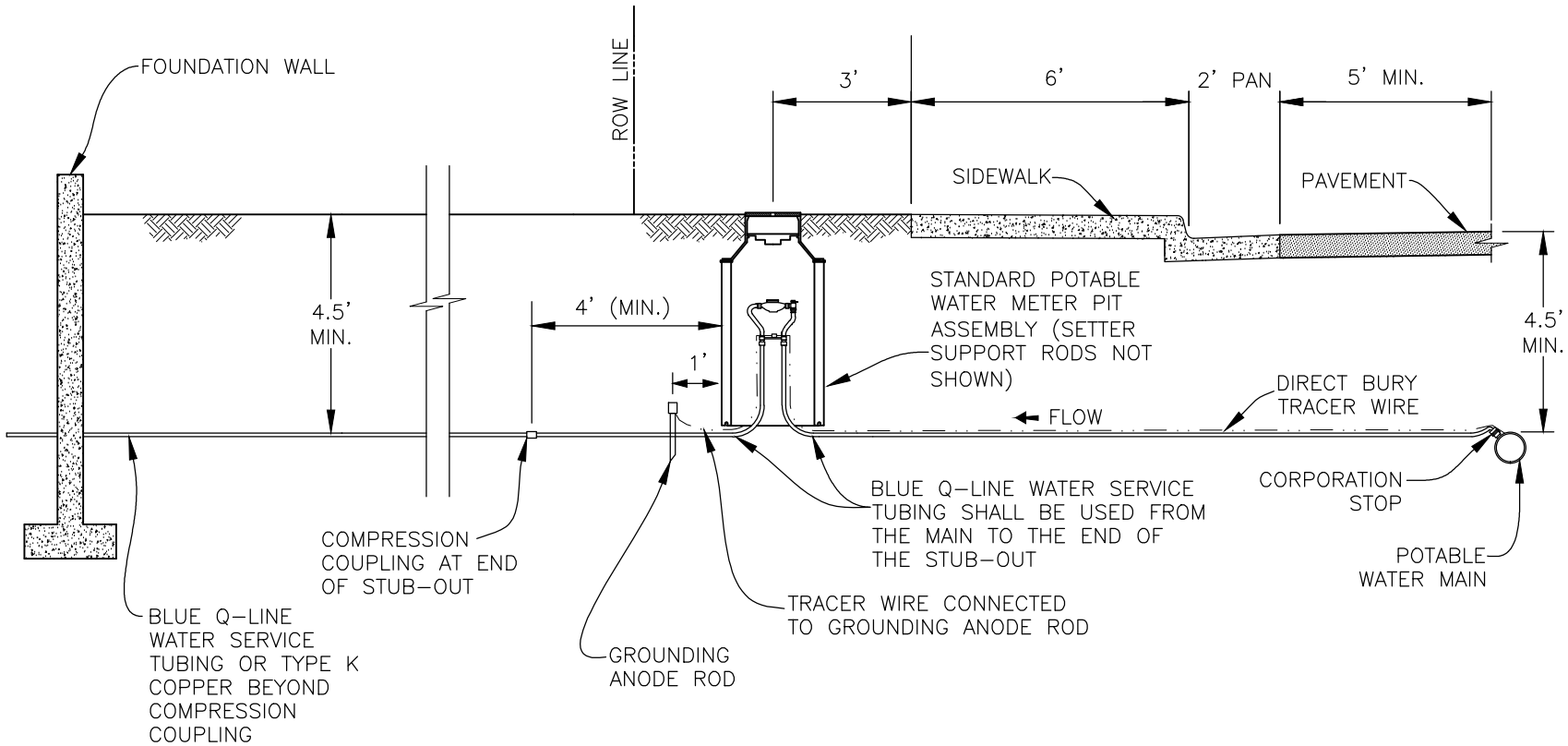

REVISIONS:
2/1/01
8/1/02
7/13/11
2/8/16
12/16/24

SOUTH ADAMS COUNTY
WATER AND SANITATION DISTRICT

POTABLE SERVICE LINE INSTALLATION
ATTACHED WALK RESIDENTIAL SERVICE

WP-3

NOTES:

1. ALL SERVICE LINE WORK FROM THE MAIN TO THE BUILDING SHALL BE INSTALLED BY THE CONTRACTOR AND INSPECTED BY THE DISTRICT. PRIOR TO BACKFILLING, ALL PORTIONS OF THE SERVICE LINE TRENCH SHALL BE FILLED WITH SQUEEGEE TO A DEPTH OF 6" OVER THE TOP OF THE SERVICE LINE.

2. DIRECT BURY TRACER WIRE SHALL BE EXTENDED FROM THE MAIN ALONG THE SERVICE LINE AND BE TERMINATED IN THE METER PIT. THE TRACER WIRE SHALL BE CONNECTED TO THE TRACER WIRE GROUNDING ANODE ROD IN THE METER PIT USING A GEL CONNECTOR AT THE TERMINATION AT THE CROSS-BRACE.

3. ALL PORTIONS OF SERVICE LINE FROM THE MAIN TO THE BUILDING SHALL BE CONTINUOUS WITHOUT SPLICES OR FITTINGS EXCEPT FOR THE COMPRESSION COUPLING AT THE END OF THE STUB-OUT, AND CONNECTIONS TO THE METER SETTER. SWEAT CONNECTIONS AND FITTINGS ARE STRICTLY PROHIBITED ALONG THE SERVICE LINE, INCLUDING METER PIT ASSEMBLIES.

4. BACKFLOW ASSEMBLY SHALL BE IN CONFORMANCE WITH AWWA C510 AND AS APPROVED BY THE FOUNDATION FOR CROSS-CONNECTION CONTROL AND HYDRAULIC RESEARCH, UNIVERSITY OF SOUTHERN CALIFORNIA, LATEST EDITION. FIRE SUPPRESSION BACKFLOW ASSEMBLIES SHALL BE THE RESPONSIBILITY OF THE HOMEOWNER AND SHALL BE MAINTAINED IN PROPER WORKING CONDITION AND TESTED ANNUALLY.

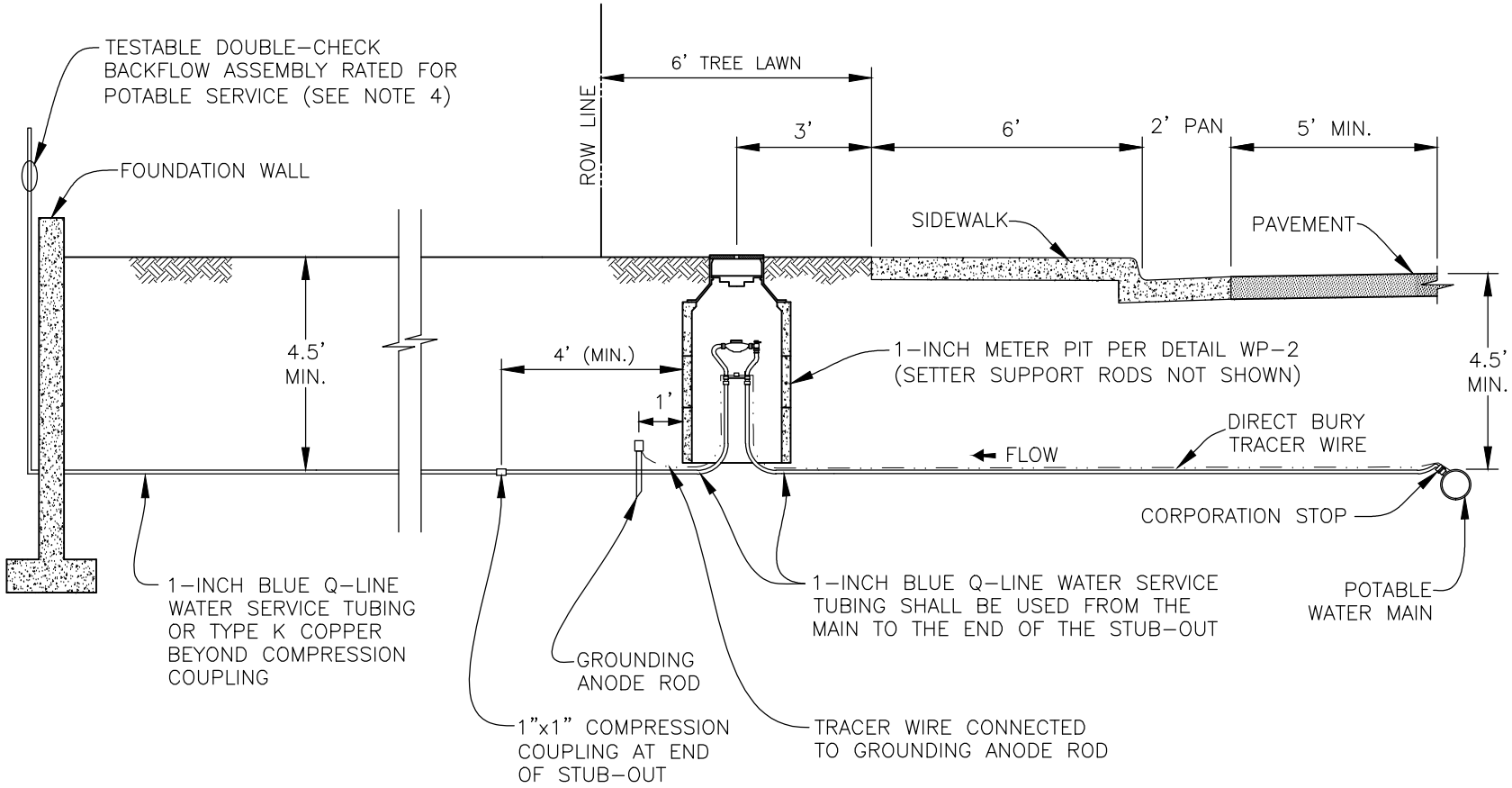

REVISIONS:
8/1/02
7/13/11
2/8/16
12/28/23
12/16/24

SOUTH ADAMS COUNTY
WATER AND SANITATION DISTRICT

POTABLE SERVICE LINE INSTALLATION
ATTACHED WALK SERVICE WITH FIRE SUPPRESSION
(NEW CONSTRUCTION)

WP-3A

NOTES:

1. ALL SERVICE LINE WORK FROM THE MAIN TO THE BUILDING SHALL BE INSTALLED BY THE CONTRACTOR AND INSPECTED BY THE DISTRICT. PRIOR TO BACKFILLING, ALL PORTIONS OF THE SERVICE LINE TRENCH SHALL BE FILLED WITH SQUEEGEE TO A DEPTH OF 6" OVER THE TOP OF THE SERVICE LINE.

2. DIRECT BURY TRACER WIRE SHALL BE EXTENDED FROM THE MAIN ALONG THE SERVICE LINE AND BE TERMINATED IN THE METER PIT. THE TRACER WIRE SHALL BE CONNECTED TO THE TRACER WIRE GROUNDING ANODE ROD IN THE METER PIT USING A GEL CONNECTOR AT THE TERMINATION AT THE CROSS-BRACE.

3. ALL PORTIONS OF SERVICE LINE FROM THE MAIN TO THE BUILDING SHALL BE CONTINUOUS WITHOUT SPLICES OR FITTINGS EXCEPT FOR THE COMPRESSION COUPLING AT THE END OF THE STUB-OUT, AND CONNECTIONS TO THE METER SETTER. SWEAT CONNECTIONS AND FITTINGS ARE STRICTLY PROHIBITED ALONG THE SERVICE LINE, INCLUDING METER PIT ASSEMBLIES.

4. BACKFLOW ASSEMBLY SHALL BE IN CONFORMANCE WITH AWWA C510 AND AS APPROVED BY THE FOUNDATION FOR CROSS-CONNECTION CONTROL AND HYDRAULIC RESEARCH, UNIVERSITY OF SOUTHERN CALIFORNIA, LATEST EDITION. FIRE SUPPRESSION BACKFLOW ASSEMBLIES SHALL BE THE RESPONSIBILITY OF THE HOMEOWNER AND SHALL BE MAINTAINED IN PROPER WORKING CONDITION AND TESTED ANNUALLY.

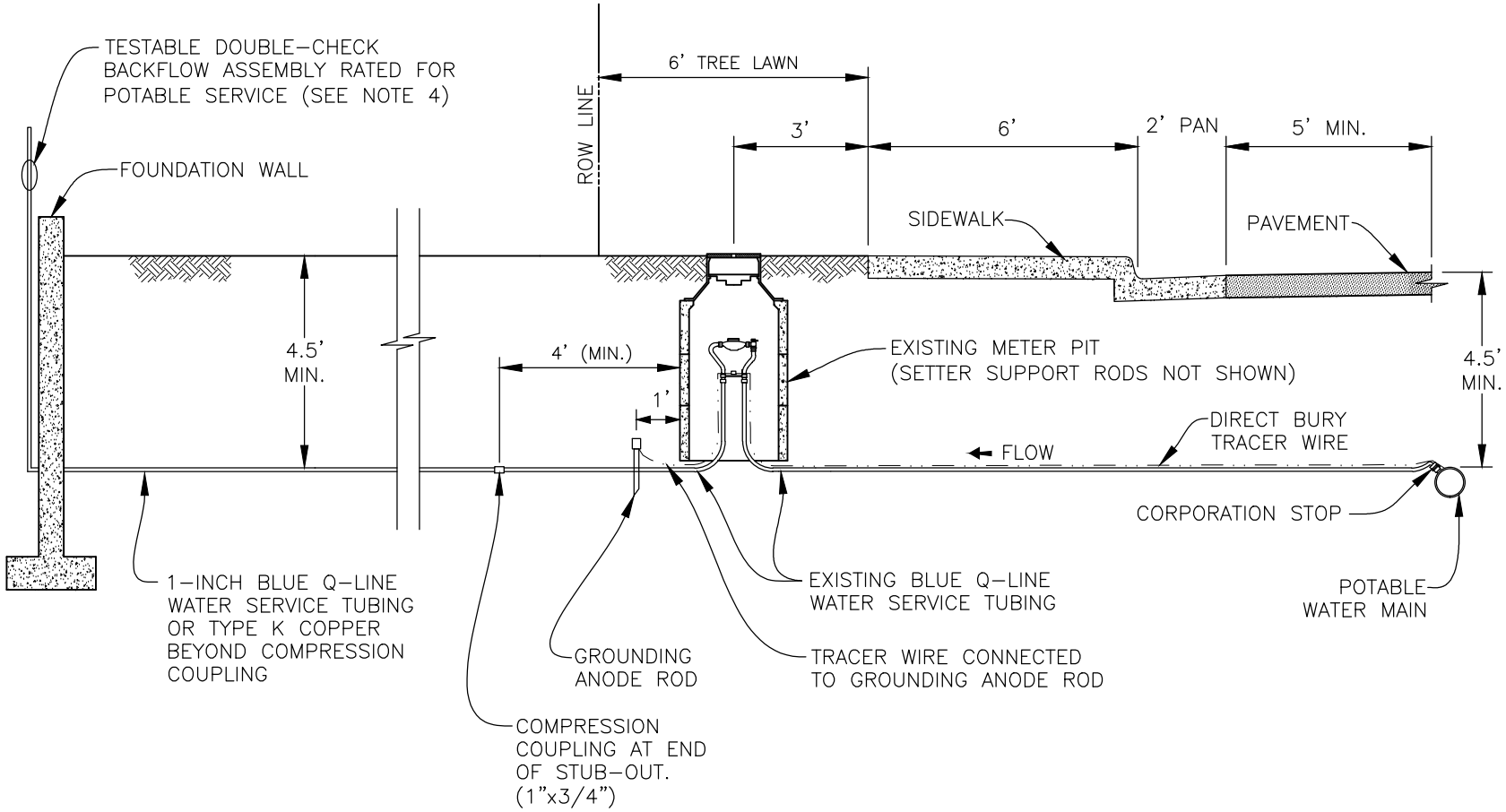

REVISIONS:
8/1/02
7/13/11
2/8/16
12/28/23
12/16/24

SOUTH ADAMS COUNTY
WATER AND SANITATION DISTRICT

POTABLE SERVICE LINE INSTALLATION
ATTACHED WALK SERVICE WITH FIRE SUPPRESSION
(EXISTING METERS)

WP-3B

NOTES:

1. ALL SERVICE LINE WORK FROM THE MAIN TO THE BUILDING SHALL BE INSTALLED BY THE CONTRACTOR AND INSPECTED BY THE DISTRICT. PRIOR TO BACKFILLING, ALL PORTIONS OF THE SERVICE LINE TRENCH SHALL BE FILLED WITH BEDDING MATERIAL TO A DEPTH OF 6" OVER THE TOP OF THE SERVICE LINE.

2. DIRECT BURY TRACER WIRE SHALL BE EXTENDED FROM THE MAIN ALONG THE SERVICE LINE AND BE TERMINATED IN THE METER PIT. THE TRACER WIRE SHALL BE CONNECTED TO THE GROUNDING ANODE ROD IN THE METER PIT USING A GEL CONNECTOR AT THE TERMINATION AT THE CROSS-BRACE.

3. ALL PORTIONS OF SERVICE LINE FROM THE MAIN TO THE BUILDING SHALL BE CONTINUOUS WITHOUT SPLICES OR FITTINGS EXCEPT FOR THE COMPRESSION COUPLING AT THE END OF THE STUB-OUT, AND THE CONNECTIONS TO THE METER SETTER. SWEAT CONNECTIONS AND FITTINGS ARE STRICTLY PROHIBITED ANYWHERE ALONG THE SERVICE LINE, INCLUDING METER PIT ASSEMBLIES.

4. METER PITS SHALL BE CENTERED IN TREE LAWN, REGARDLESS OF TREE LAWN WIDTH.

5. WHERE METER PITS ARE LOCATED 10' APART OR LESS, GROUNDING ANODE RODS SHALL NOT BE INSTALLED.

6. METER PIT SHALL BE SET SUCH THAT THE FINAL ELEVATION OF THE LID IS 1" ABOVE THE FINISHED GRADE.

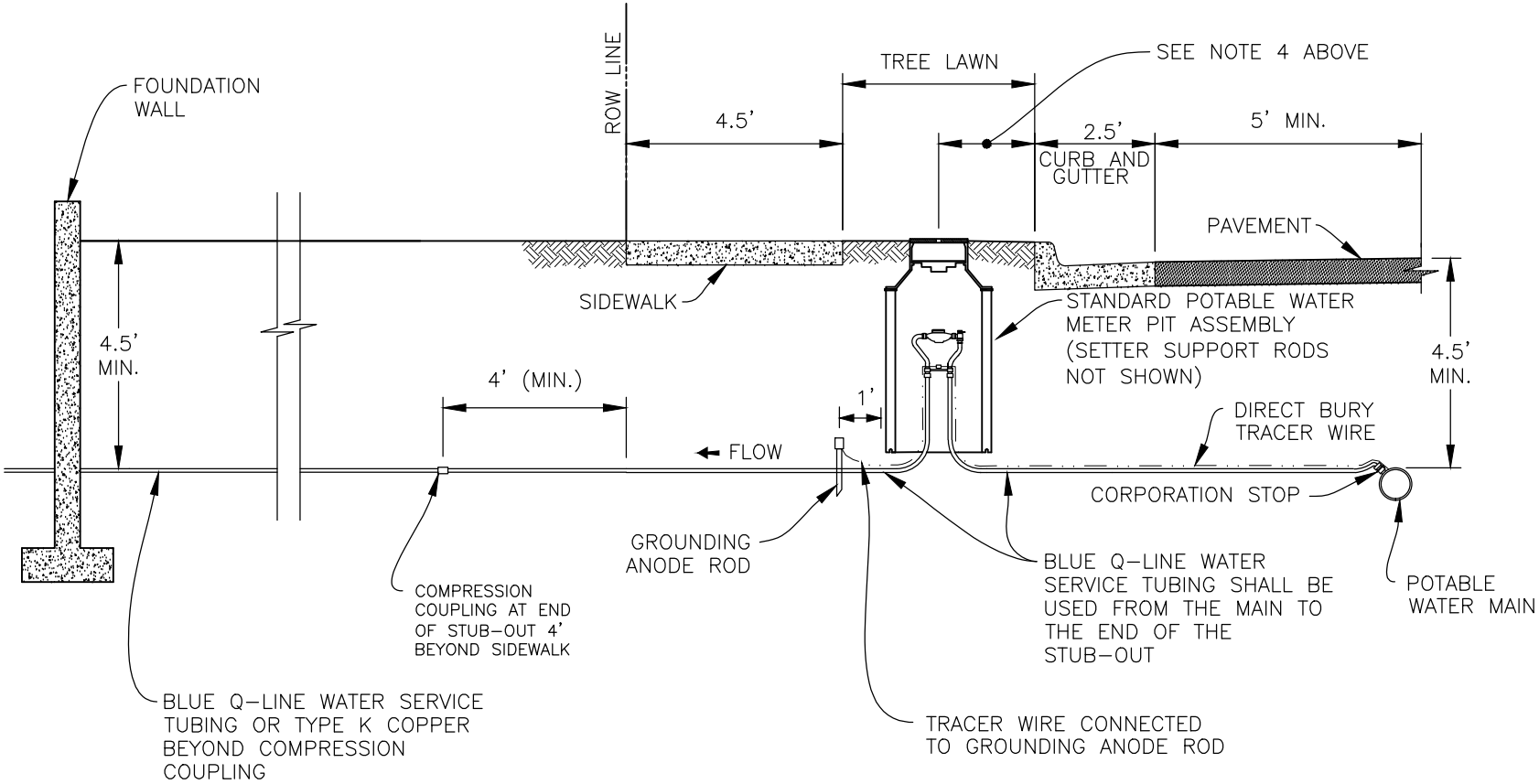

REVISIONS:
2/1/01
8/1/02
7/13/11
2/8/16
12/16/24

SOUTH ADAMS COUNTY
WATER AND SANITATION DISTRICT

POTABLE SERVICE LINE INSTALLATION

DETACHED WALK RESIDENTIAL SERVICE

WP-4

NOTES:

1. ALL SERVICE LINE WORK FROM THE MAIN TO THE BUILDING SHALL BE INSTALLED BY THE CONTRACTOR AND INSPECTED BY THE DISTRICT. PRIOR TO BACKFILLING, ALL PORTIONS OF THE SERVICE LINE TRENCH SHALL BE FILLED WITH SQUEEGEE TO A DEPTH OF 6" OVER THE TOP OF THE SERVICE LINE.

2. DIRECT BURY TRACER WIRE SHALL BE EXTENDED FROM THE MAIN ALONG THE SERVICE LINE AND BE TERMINATED IN THE METER PIT. THE TRACER WIRE SHALL BE CONNECTED TO THE TRACER WIRE GROUNDING ANODE ROD IN THE METER PIT USING A GEL CONNECTOR AT THE TERMINATION AT THE CROSS-BRACE.

3. ALL PORTIONS OF SERVICE LINE FROM THE MAIN TO THE BUILDING SHALL BE CONTINUOUS WITHOUT SPLICES OR FITTINGS EXCEPT FOR THE COMPRESSION COUPLING AT THE END OF THE STUB-OUT, AND CONNECTIONS TO THE METER SETTER. SWEAT CONNECTIONS AND FITTINGS ARE STRICTLY PROHIBITED ALONG THE SERVICE LINE, INCLUDING METER PIT ASSEMBLIES.

4. METER PITS SHALL BE CENTERED IN TREE LAWN, REGARDLESS OF TREE LAWN WIDTH.

5. BACKFLOW ASSEMBLY SHALL BE IN CONFORMANCE WITH AWWA C510 AND AS APPROVED BY THE FOUNDATION FOR CROSS-CONNECTION CONTROL AND HYDRAULIC RESEARCH, UNIVERSITY OF SOUTHERN CALIFORNIA, LATEST EDITION. FIRE SUPPRESSION BACKFLOW ASSEMBLIES SHALL BE THE RESPONSIBILITY OF THE HOMEOWNER AND SHALL BE MAINTAINED IN PROPER WORKING CONDITION AND TESTED ANNUALLY.

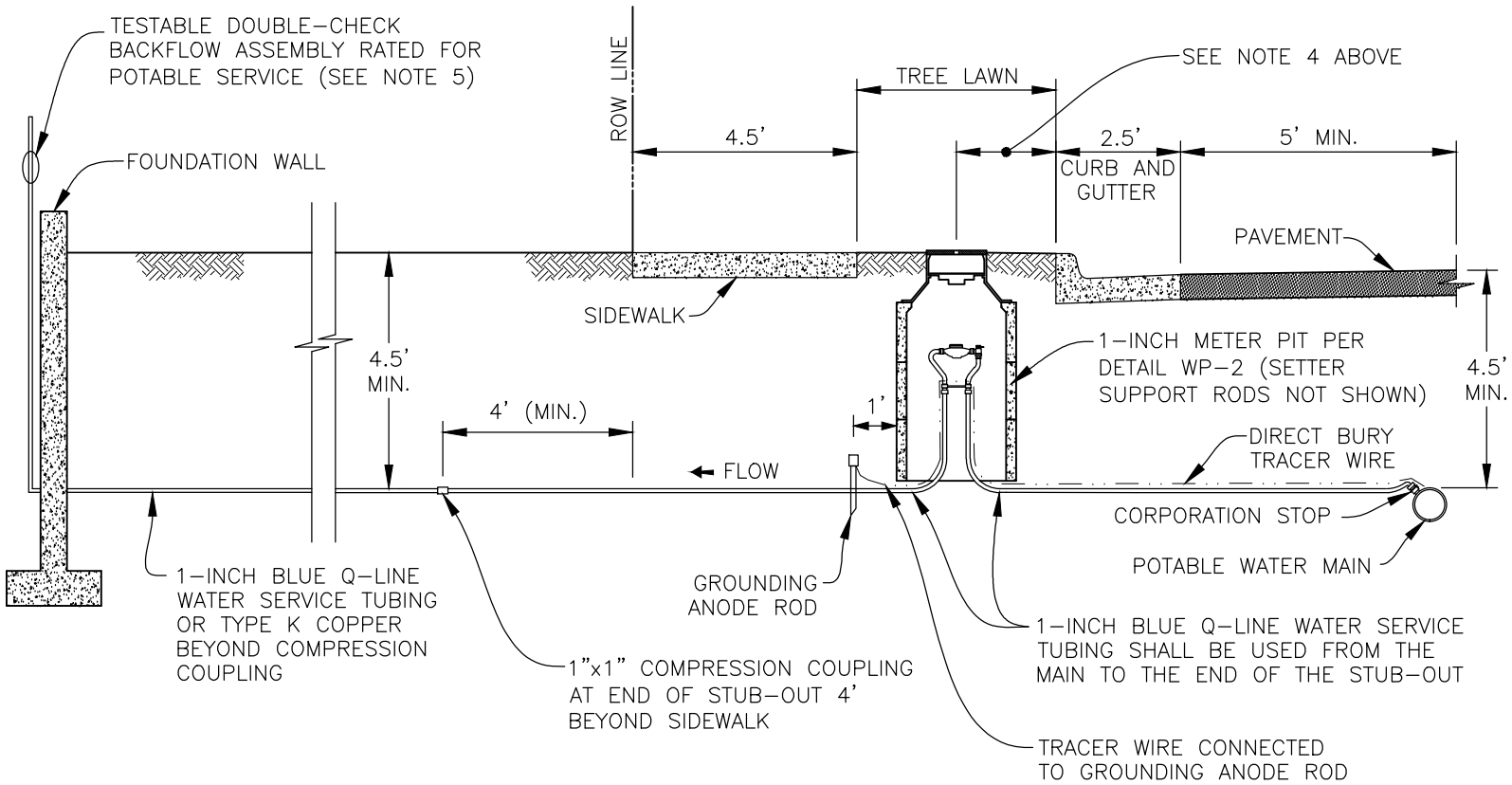

REVISIONS:
2/1/01
8/1/02
7/13/11
12/28/23
12/16/24

SOUTH ADAMS COUNTY
WATER AND SANITATION DISTRICT

POTABLE SERVICE LINE INSTALLATION
DETACHED WALK SERVICE WITH FIRE SUPPRESSION
(NEW CONSTRUCTION)

WP-4A

NOTES:

1. ALL SERVICE LINE WORK FROM THE MAIN TO THE BUILDING SHALL BE INSTALLED BY THE CONTRACTOR AND INSPECTED BY THE DISTRICT. PRIOR TO BACKFILLING, ALL PORTIONS OF THE SERVICE LINE TRENCH SHALL BE FILLED WITH SQUEEGEE TO A DEPTH OF 6" OVER THE TOP OF THE SERVICE LINE.

2. DIRECT BURY TRACER WIRE SHALL BE EXTENDED FROM THE MAIN ALONG THE SERVICE LINE AND BE TERMINATED IN THE METER PIT. THE TRACER WIRE SHALL BE CONNECTED TO THE TRACER WIRE GROUNDING ANODE ROD IN THE METER PIT USING A GEL CONNECTOR AT THE TERMINATION AT THE CROSS-BRACE.

3. ALL PORTIONS OF SERVICE LINE FROM THE MAIN TO THE BUILDING SHALL BE CONTINUOUS WITHOUT SPLICES OR FITTINGS EXCEPT FOR THE COMPRESSION COUPLING AT THE END OF THE STUB-OUT, AND CONNECTIONS TO THE METER SETTER. SWEAT CONNECTIONS AND FITTINGS ARE STRICTLY PROHIBITED ALONG THE SERVICE LINE, INCLUDING METER PIT ASSEMBLIES.

4. METER PITS SHALL BE CENTERED IN TREE LAWN, REGARDLESS OF TREE LAWN WIDTH.

5. BACKFLOW ASSEMBLY SHALL BE IN CONFORMANCE WITH AWWA C510 AND AS APPROVED BY THE FOUNDATION FOR CROSS-CONNECTION CONTROL AND HYDRAULIC RESEARCH, UNIVERSITY OF SOUTHERN CALIFORNIA, LATEST EDITION. FIRE SUPPRESSION BACKFLOW ASSEMBLIES SHALL BE THE RESPONSIBILITY OF THE HOMEOWNER AND SHALL BE MAINTAINED IN PROPER WORKING CONDITION AND TESTED ANNUALLY.

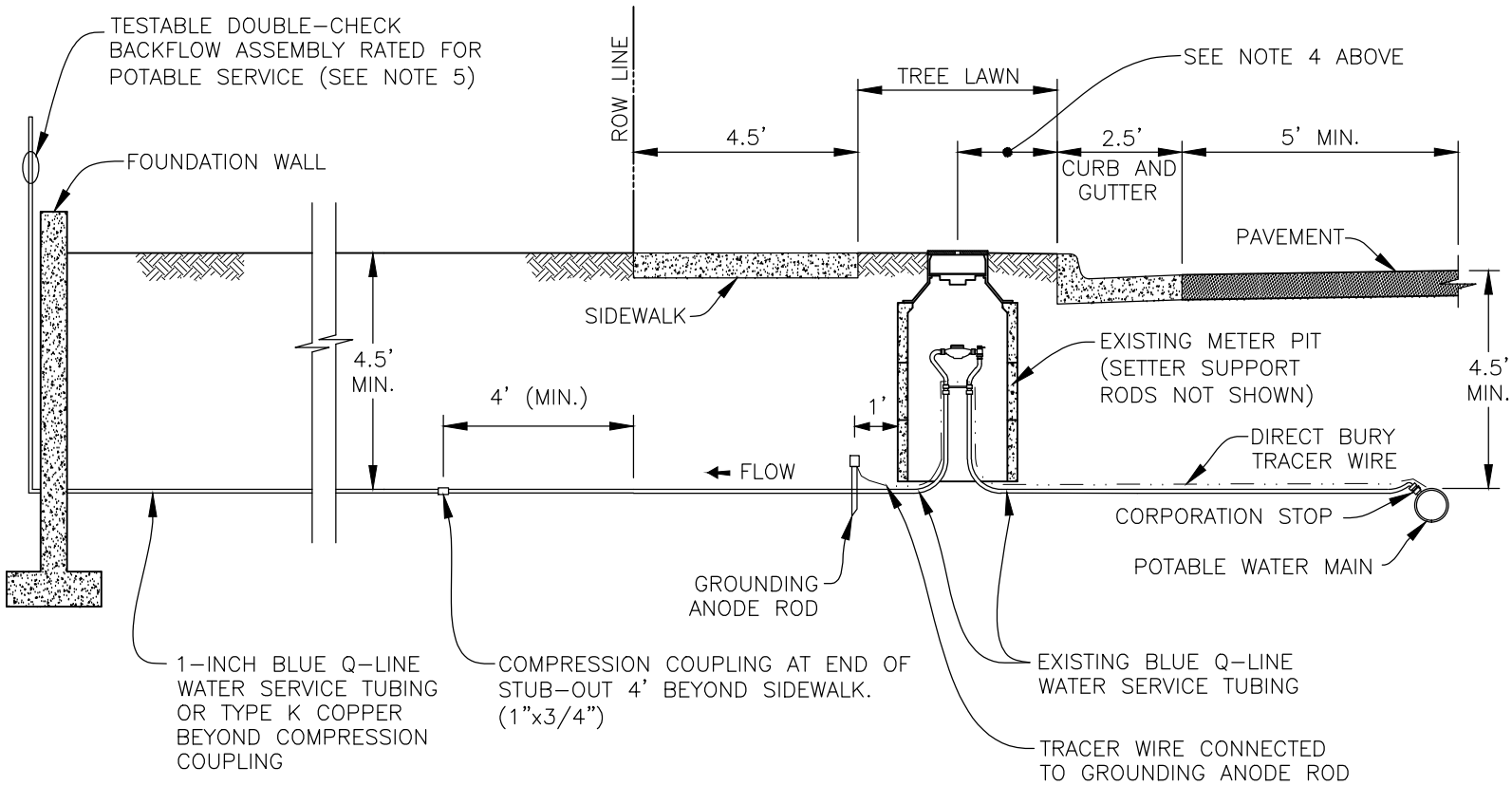

REVISIONS:
2/1/01
8/1/02
7/13/11
12/28/23
12/16/24

SOUTH ADAMS COUNTY
WATER AND SANITATION DISTRICT

POTABLE SERVICE LINE INSTALLATION
DETACHED WALK SERVICE WITH FIRE SUPPRESSION
(EXISTING METERS)

WP-4B

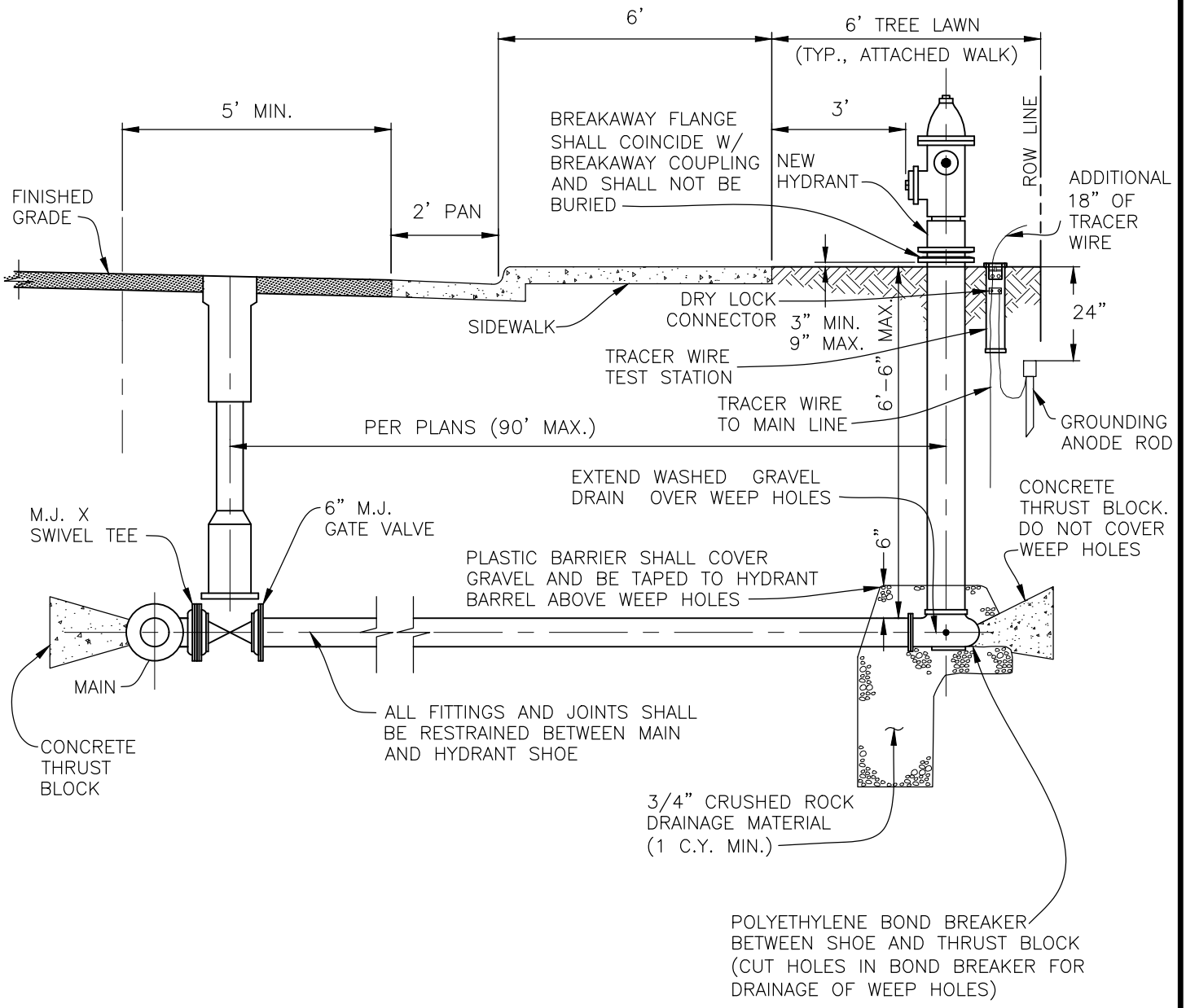

NOTES:

1. IN AREAS WHERE SIDEWALKS MEANDER OR DO NOT EXIST, FIRE HYDRANT LOCATIONS SHALL BE APPROVED BY THE DISTRICT, BUT IN ALL CASES SHALL BE A MINIMUM OF 2 FEET INSIDE THE RIGHT-OF-WAY LINE.

2. FIRE HYDRANTS SHALL BE PAINTED SAFETY YELLOW (RUSTOLEUM HIGH PERFORMANCE ENAMEL #242258).

REVISIONS:	SOUTH ADAMS COUNTY WATER AND SANITATION DISTRICT	WP-5
6/7/00		
2/1/01		
8/1/02		
7/13/11	FIRE HYDRANT ASSEMBLY	
2/25/16	ATTACHED WALK	

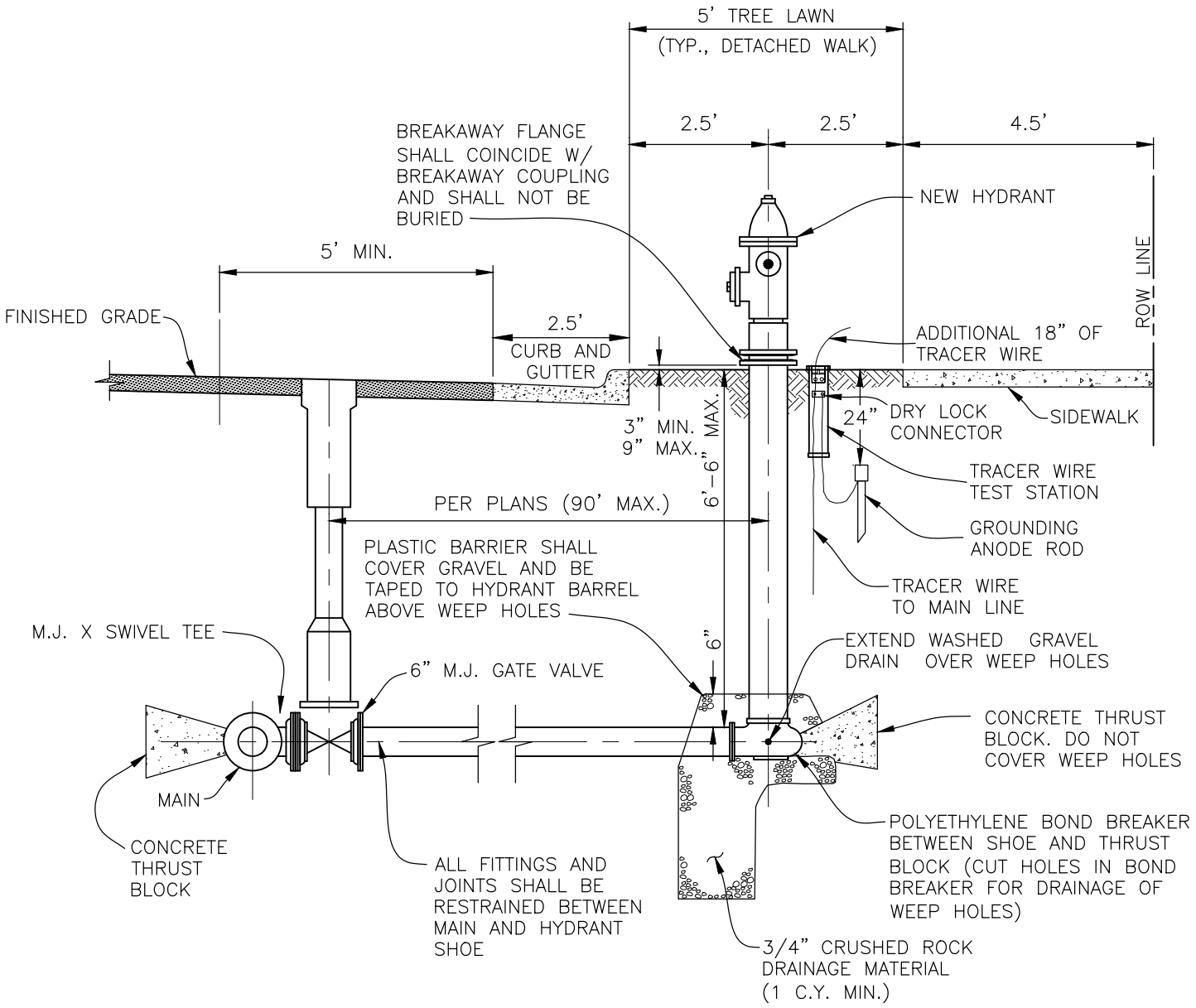

NOTES:

1. IN AREAS WHERE SIDEWALKS MEANDER OR DO NOT EXIST, FIRE HYDRANT LOCATIONS SHALL BE APPROVED BY THE DISTRICT, BUT IN ALL CASES SHALL BE A MINIMUM OF 2 FEET INSIDE THE RIGHT-OF-WAY LINE.

2. FIRE HYDRANTS SHALL BE PAINTED SAFETY YELLOW (RUSTOLEUM HIGH PERFORMANCE ENAMEL #242258).

REVISIONS:	SOUTH ADAMS COUNTY WATER AND SANITATION DISTRICT	WP-6
6/7/00		
2/1/01		
8/1/02		
7/13/11	FIRE HYDRANT ASSEMBLY	
2/25/16	DETACHED WALK	

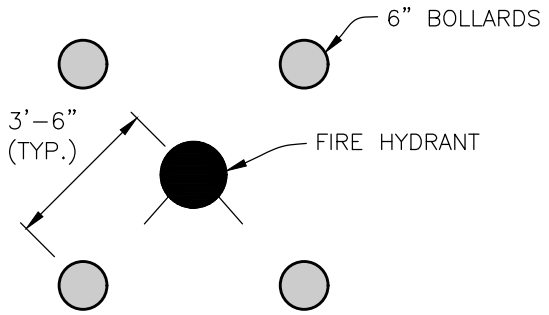

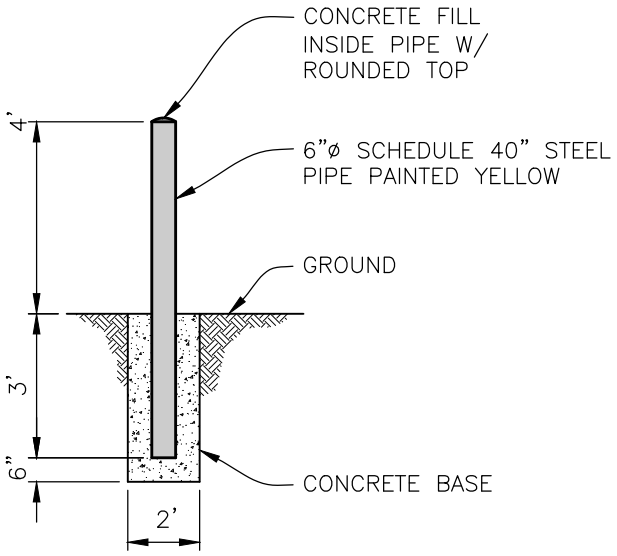

NOTES:

TRAFFIC BOLLARDS SURROUNDING FIRE HYDRANTS MAY BE REQUIRED IN CERTAIN AREAS AND WILL BE DETERMINED BY THE DISTRICT ON A CASE BY CASE BASIS.

REVISIONS:	SOUTH ADAMS COUNTY WATER AND SANITATION DISTRICT	WP-7
7/13/11	TRAFFIC BOLLARD SPACING SURROUNDING FIRE HYDRANTS IN COMMERCIAL/INDUSTRIAL AREAS	

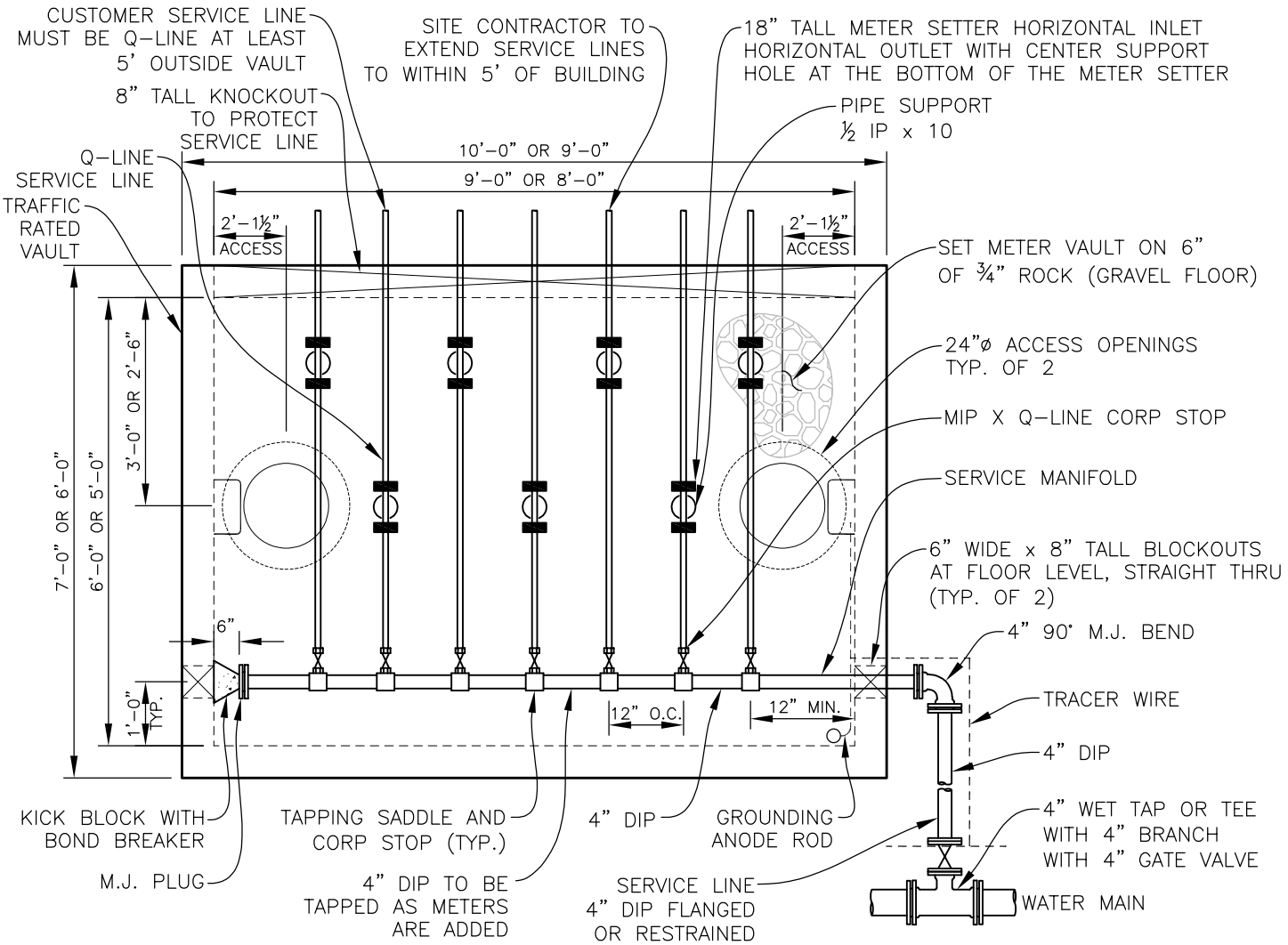

10' x 7' METER VAULT PLAN
(MAX. 7 SERVICES)

9' x 6' METER VAULT PLAN
(MAX. 5 SERVICES)
N.T.S.

NOTES:

1.) CONCRETE: 5000 PSI MINIMUM.
2.) REINFORCING: GRADE 60 MINIMUM.
LID: #6 REBAR @ 8" O.C.E.W., 1½" OFF BOTTOM OF LID
WALLS: #4 REBAR @ 12" O.C.E.W., 1½" OFF INSIDE OF WALL
3.) 6" THICK WALLS AND LID TO BE 8" THICK.
4.) VAULT IS SUITABLE FOR AASHTO HS-20-44 LOADINGS.
5.) ALL SERVICE LINES SHALL BE LABELED TO IDENTIFY WHICH UNIT THEY SERVE.
6.) RING AND COVER SHALL BE 3 PIECE CASTINGS MH-7003524CI OR EQUAL WITH 2" HOLES FOR ANTENNAS DRILLED IN OUTER RING.
7.) EXTEND TRACER WIRE BEHIND STEPS AND LEAVE ADDITIONAL 18" OF TRACER WIRE.
8.) FILL BLOCKOUTS WITH SPRAY FOAM.

REVISIONS:	SOUTH ADAMS COUNTY WATER AND SANITATION DISTRICT	WP-8
11/4/15		
1/27/17		
12/5/24	MULTI-SETTER METER VAULT	
12/16/24		

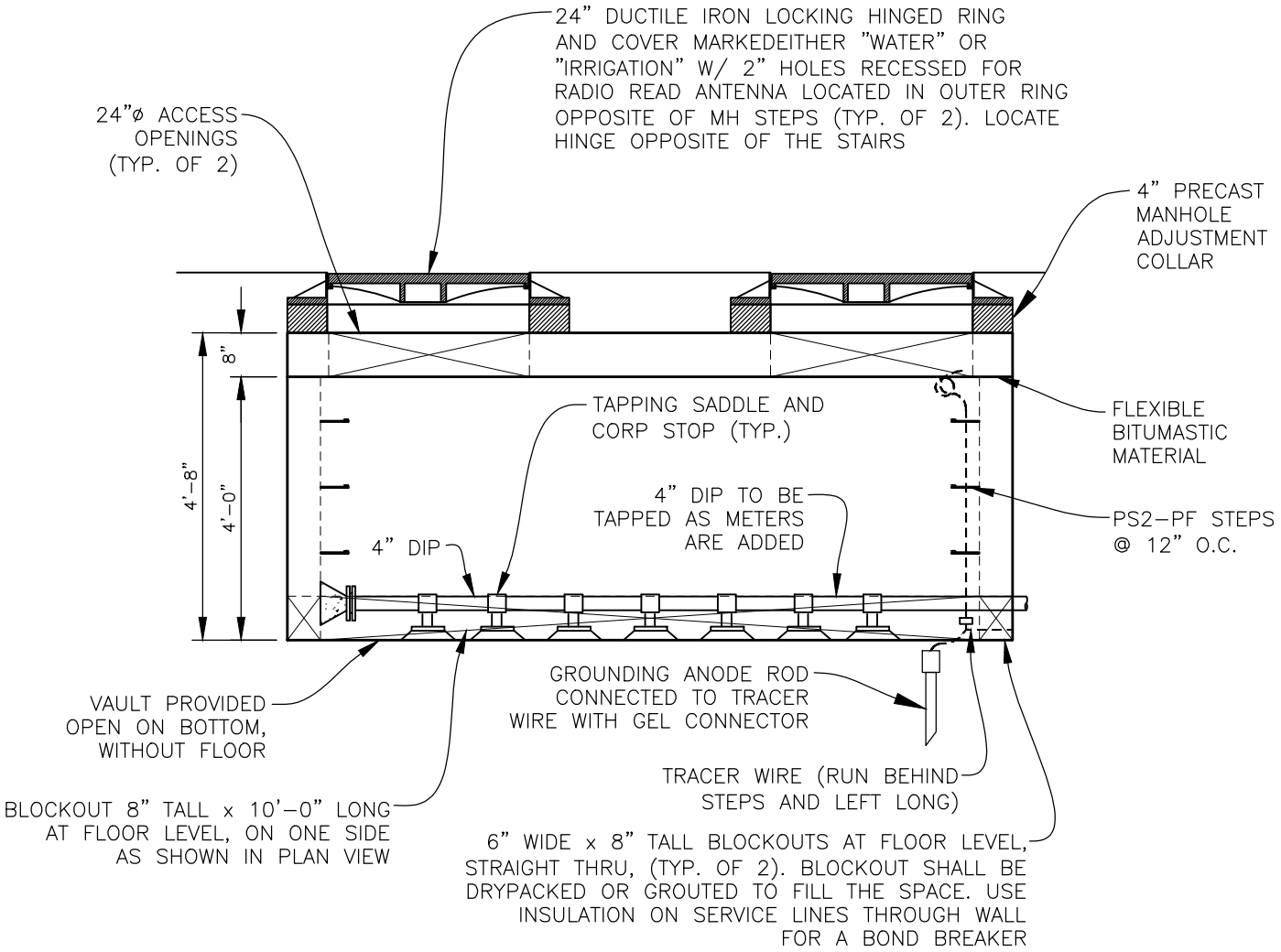

METER VAULT ELEVATION
N.T.S.

NOTES:

1.) CONCRETE: 5000 PSI MINIMUM.
2.) REINFORCING: GRADE 60 MINIMUM.
LID: #6 REBAR @ 8" O.C.E.W., 1½" OFF BOTTOM OF LID.
WALLS: #4 REBAR @ 12" O.C.E.W., 1½" OFF INSIDE OF WALL.
3.) 6" THICK WALLS AND LID TO BE 8" THICK.
4.) VAULT IS SUITABLE FOR AASHTO HS-20-44 LOADINGS.
5.) ALL SERVICE LINES SHALL BE LABELED TO IDENTIFY WHICH UNIT THEY SERVE.
6.) RING AND COVER SHALL BE 3 PIECE CASTINGS MH-7003524CI OR EQUAL WITH 2" HOLES FOR ANTENNAS DRILLED IN OUTER RING.

REVISIONS:	SOUTH ADAMS COUNTY WATER AND SANITATION DISTRICT	WP-8.1
7/13/11		
11/4/15		
1/27/17	MULTI-SETTER METER VAULT	
12/16/24	ELEVATION VIEW - SIDE ENTRY	

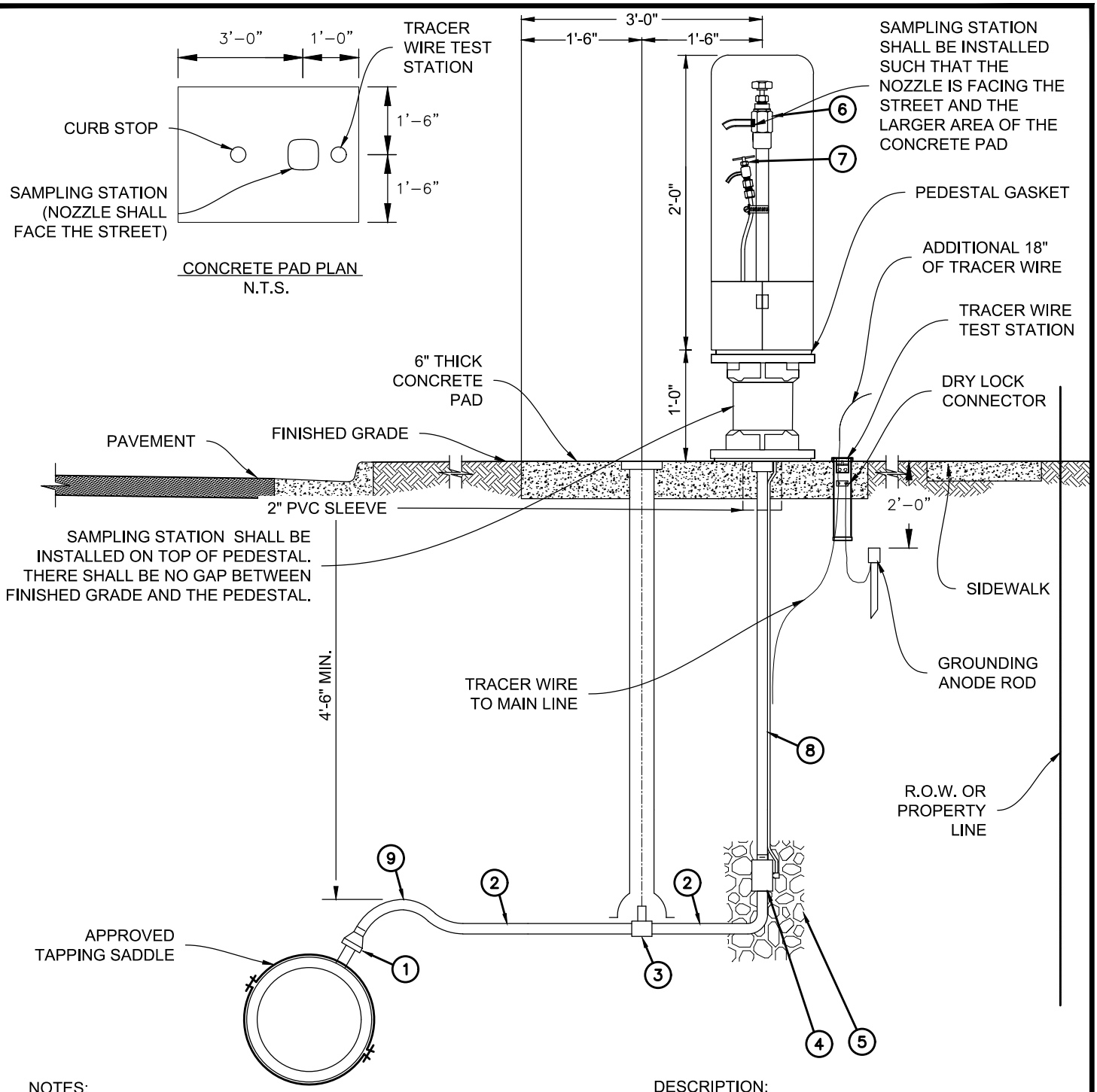

NOTES:

1. SERVICE LINE MUST HAVE MIN. 4'-6" COVER.
2. THERE SHALL NOT BE ANY CONNECTIONS MADE WITHIN 5'-0" OF THE SAMPLE STATION.
3. NO DISSIMILAR METALS WILL BE ALLOWED.
4. TRACER WIRE SHALL BE INSTALLED ALONG THE SERVICE LINE.
5. SAMPLING STATIONS SHALL BE LOCATED IN RIGHT-OF-WAY OR IN A POCKET EASEMENT. LOCATIONS SHALL BE CLOSELY COORDINATED WITH THE DISTRICT.
6. TWO 6-INCH BOLLARDS SHALL BE INSTALLED AT LOCATIONS WITH NO CURB AND GUTTER, AND SHALL BE COORDINATED WITH THE DISTRICT.
7. WHERE NO TREE LINE EXISTS (OR PLANNED FOR) THE SAMPLING STATION SHALL BE INSTALLED DIRECTLY BEHIND THE SIDEWALK.

DESCRIPTION:

1. CORPORATION STOP WITH Q-LINE.
2. Q-LINE SERVICE LINE.
3. CURB STOP AND BOX.
4. 3/4" ELBOW MIPT X Q-LINE BRASS FITTING.
5. 1-1/2 CU. FT. GRAVEL.
6. KUPFERLE ECLIPSE 88-SS SAMPLING STATION FOR COLD WEATHER W/SACWSD IDENTIFICATION IMPRINT.
7. STAINLESS STEEL 1/4" PET COCK WITH STAINLESS STEEL TUBING.
8. 1/2" STAINLESS STEEL WATERWAY.
9. EXPANSION LOOP.

REVISIONS:	SOUTH ADAMS COUNTY WATER AND SANITATION DISTRICT	WP-9
11/30/17	ABOVE GROUND SAMPLING STATION	
2/5/18		
5/03/19		

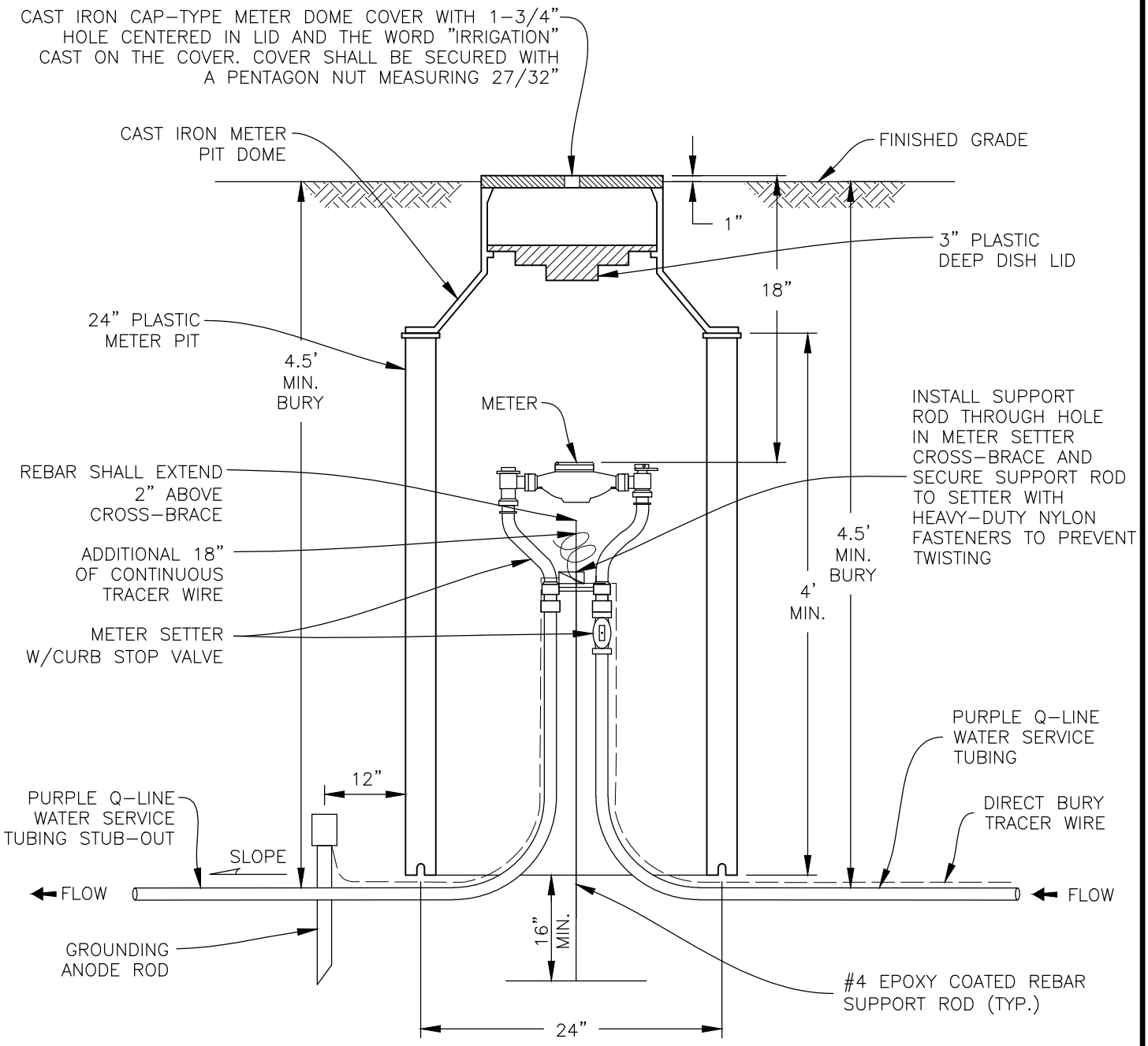

NOTES:

1. THE INNER FROST LID SHALL BE A PLASTIC DEEP DISH LID WITH PRE–DRILLED DRAIN HOLE.
2. IN LIEU OF A 24" DIAMETER PLASTIC METER PIT, A 48" HIGH, 24" DIAMETER CONCRETE PIT WITH 20" DIAMETER TOP OPENING WILL BE ACCEPTABLE. PLASTIC BASES (HALF–INCH MIN. WALL THICKNESS) SHALL BE IN CONFORMANCE WITH THE DISTRICT'S STANDARD SPECIFICATIONS.
3. METER SETTER SHALL INCLUDE A LOCKABLE ANGLE BALL VALVE AND DUAL CHECK VALVE ON DOWNSTREAM SIDE OF SETTER.

REVISIONS:	SOUTH ADAMS COUNTY WATER AND SANITATION DISTRICT	WI-1
8/1/02		
7/13/11		
2/18/16	IRRIGATION WATER METER PIT	
1/27/17	5/8"x3/4" AND 3/4" SIZES	
12/16/24		

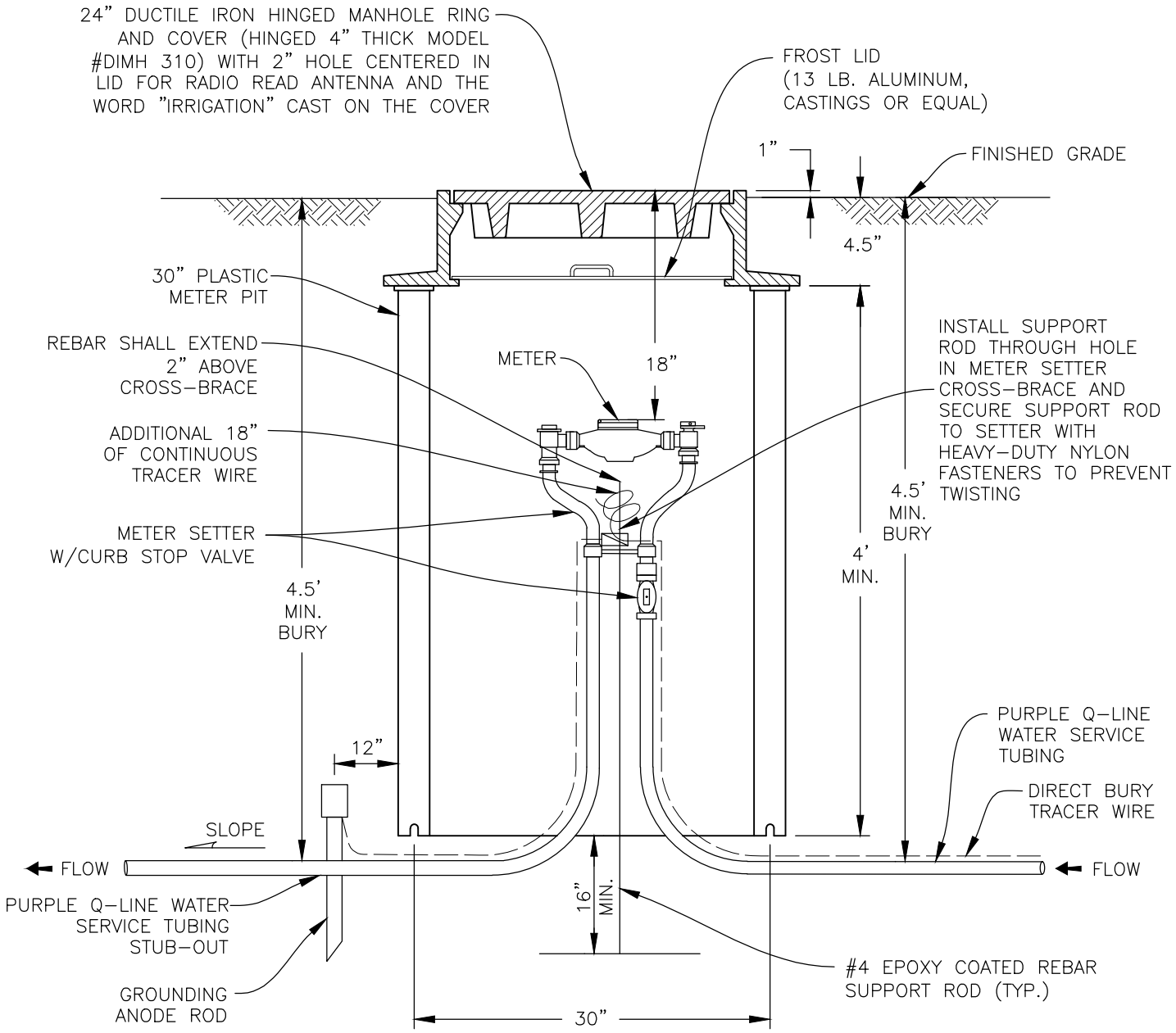

NOTES:

1. IN LIEU OF A 30" DIAMETER PLASTIC METER PIT, A 48" HIGH, 30" DIAMETER CONCRETE PIT WITH 24" DIAMETER TOP OPENING WILL BE ACCEPTABLE. PLASTIC BASES (HALF-INCH MIN. THICK WALLS) SHALL BE IN CONFORMANCE WITH THE DISTRICT'S DESIGN STANDARDS AND SPECIFICATIONS.
2. METER PITS THAT ARE LOCATED IN SIDEWALK SHALL HAVE SMOOTH TOP MANHOLE LIDS WITH TRACTION GROOVES.

REVISIONS:	SOUTH ADAMS COUNTY WATER AND SANITATION DISTRICT	WI-2
7/13/11		
2/18/16		
1/27/17	IRRIGATION WATER METER PIT 1" SIZE	
12/16/24		

NOTES:

1. ALL SERVICE LINE WORK FROM THE MAIN UP TO AND INCLUDING THE BACKFLOW PREVENTER SHALL BE INSTALLED BY THE CONTRACTOR AND INSPECTED BY THE DISTRICT. PRIOR TO BACKFILLING, ALL PORTIONS OF THE SERVICE LINE TRENCH SHALL BE FILLED WITH BEDDING MATERIAL TO A DEPTH OF 6" OVER THE TOP OF THE SERVICE LINE.

2. DIRECT BURY TRACER WIRE SHALL BE EXTENDED FROM THE MAIN ALONG THE SERVICE LINE AND BE TERMINATED IN THE METER PIT. THE TRACER WIRE SHALL BE CONNECTED TO THE TRACER WIRE GROUNDING ANODE ROD IN THE METER PIT USING A GEL CONNECTOR AT THE TERMINATION AT THE CROSS-BRACE.

3. ALL PORTIONS OF SERVICE LINE FROM THE MAIN TO THE BACKFLOW PREVENTER SHALL BE CONTINUOUS WITHOUT SPLICES OR FITTINGS EXCEPT FOR THE 90° COUPLING, AND CONNECTIONS TO THE METER SETTER AND STOP-AND-WASTE VALVE. SWEAT CONNECTIONS AND FITTINGS ARE STRICTLY PROHIBITED ALONG THE SERVICE LINE.

4. BACKFLOW PREVENTION DEVICES SHALL BE IN ACCORDANCE WITH THE DISTRICT'S "CROSS-CONNECTION CONTROL AND BACKFLOW CONTROL POLICY REGULATIONS."

5. SPRINKLER SYSTEMS BEYOND THE METER PIT SHALL BE THE RESPONSIBILITY OF THE PROPERTY OWNER.

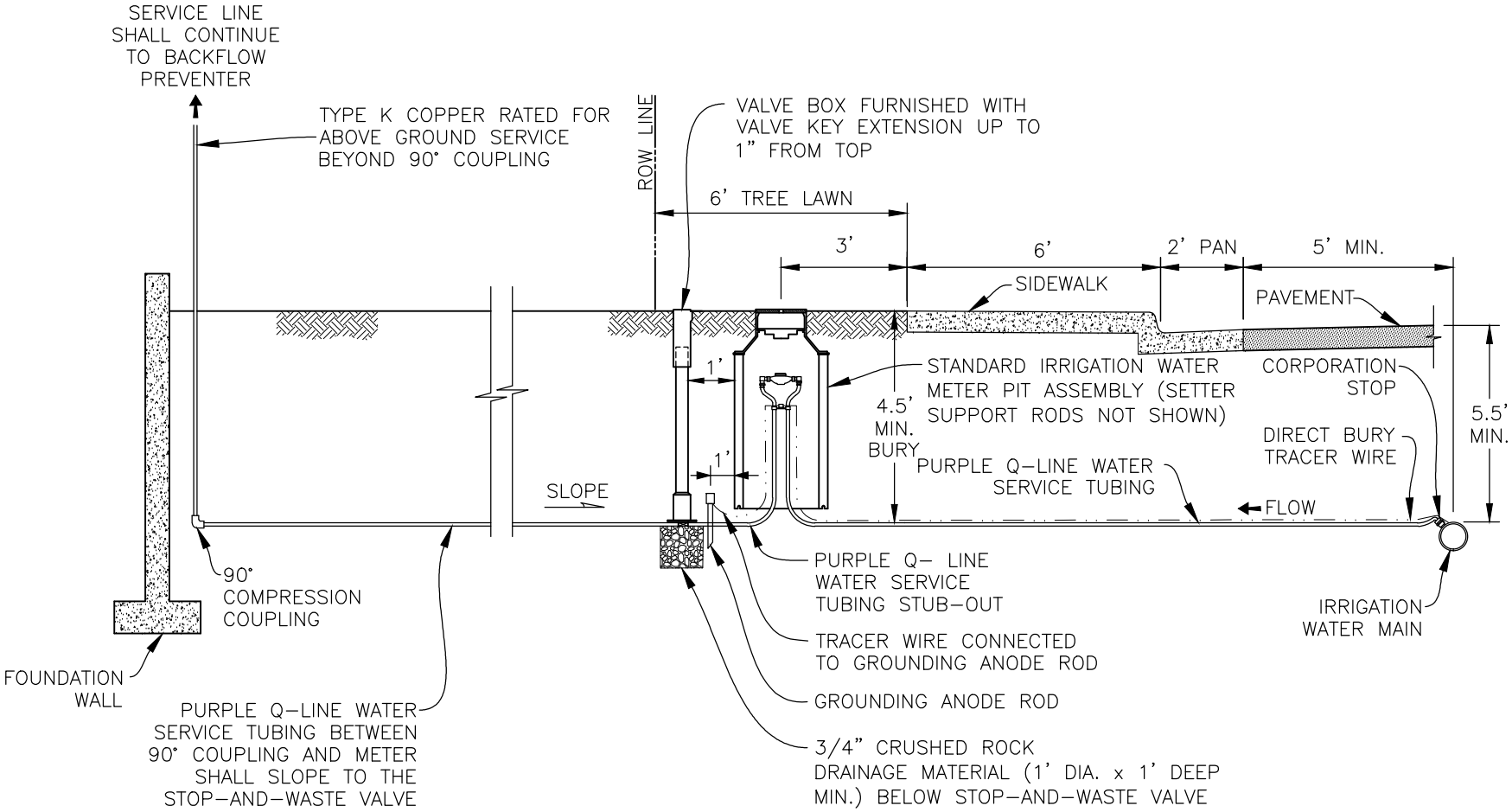

REVISIONS:
2/1/01
8/1/02
7/13/11
2/24/16
12/16/24

SOUTH ADAMS COUNTY
WATER AND SANITATION DISTRICT

IRRIGATION SERVICE LINE INSTALLATION
ATTACHED WALK RESIDENTIAL SERVICE

WI-3

NOTES:

1. ALL SERVICE LINE WORK FROM THE MAIN UP TO AND INCLUDING THE BACKFLOW PREVENTER SHALL BE INSTALLED BY THE CONTRACTOR AND INSPECTED BY THE DISTRICT. PRIOR TO BACKFILLING, ALL PORTIONS OF THE SERVICE LINE TRENCH SHALL BE FILLED WITH BEDDING MATERIAL TO A DEPTH OF 6" OVER THE TOP OF THE SERVICE LINE.

2. DIRECT BURY TRACER WIRE SHALL BE EXTENDED FROM THE MAIN ALONG THE SERVICE LINE AND BE TERMINATED IN THE METER PIT. THE TRACER WIRE SHALL BE CONNECTED TO THE TRACER WIRE GROUNDING ANODE ROD IN THE METER PIT USING A GEL CONNECTOR AT THE TERMINATION AT THE CROSS-BRACE.

3. ALL PORTIONS OF SERVICE LINE FROM THE MAIN TO THE BACKFLOW PREVENTER SHALL BE CONTINUOUS WITHOUT SPLICES OR FITTINGS EXCEPT FOR THE 90° COUPLING, AND CONNECTIONS TO THE METER SETTER AND STOP-AND-WASTE VALVE. SWEAT CONNECTIONS AND FITTINGS ARE STRICTLY PROHIBITED ALONG THE SERVICE LINE.

4. BACKFLOW PREVENTION DEVICES SHALL BE IN ACCORDANCE WITH THE DISTRICT'S "CROSS-CONNECTION CONTROL AND BACKFLOW CONTROL POLICY REGULATIONS."

5. SPRINKLER SYSTEMS BEYOND THE METER PIT SHALL BE THE RESPONSIBILITY OF THE PROPERTY OWNER.

6. METER PITS SHALL BE CENTERED IN TREE LAWN, REGARDLESS OF TREE LAWN WIDTH.

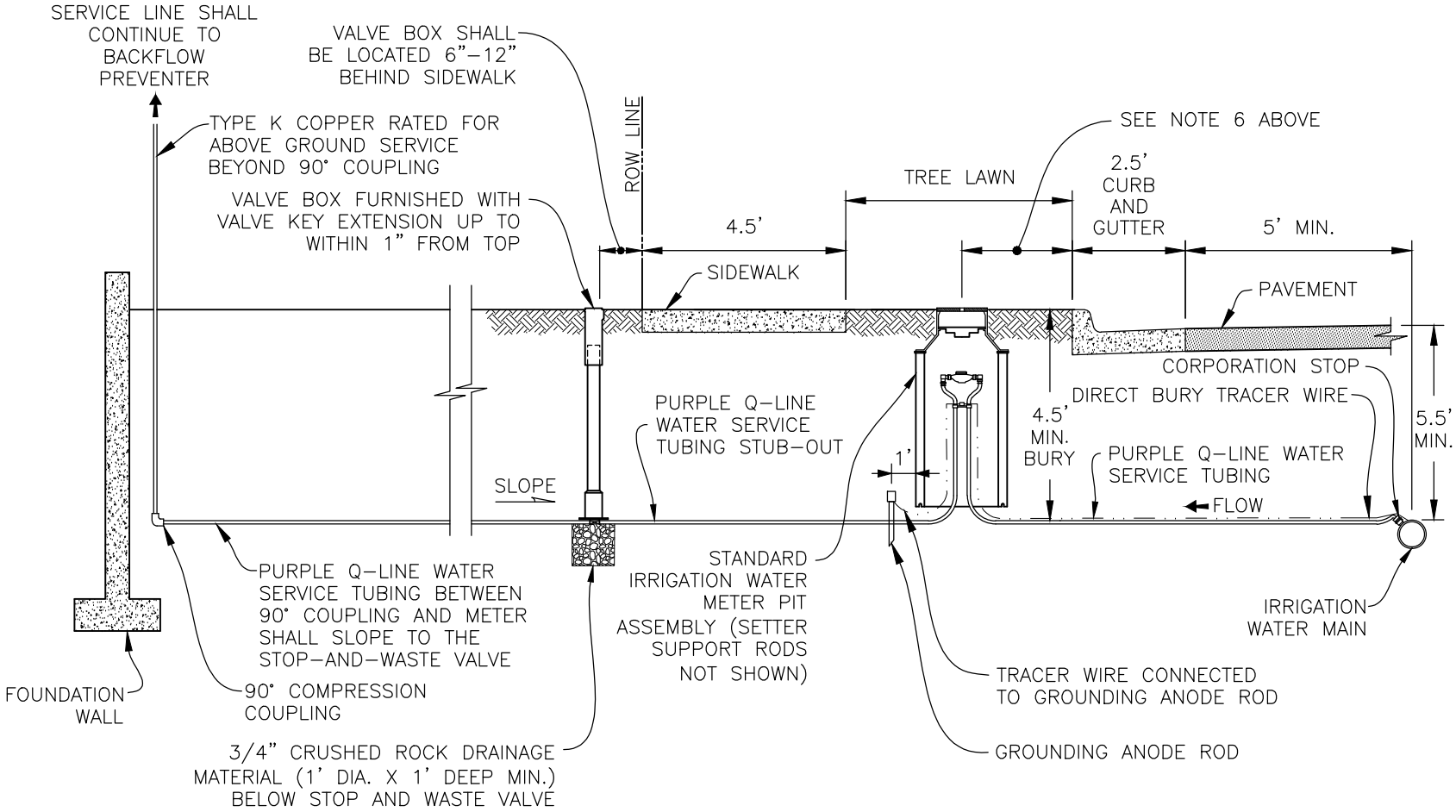

REVISIONS:

2/1/01
8/1/02
7/13/11
2/24/16
12/16/24

SOUTH ADAMS COUNTY
WATER AND SANITATION DISTRICT

IRRIGATION SERVICE LINE INSTALLATION
DETACHED WALK RESIDENTIAL SERVICE

WI-4

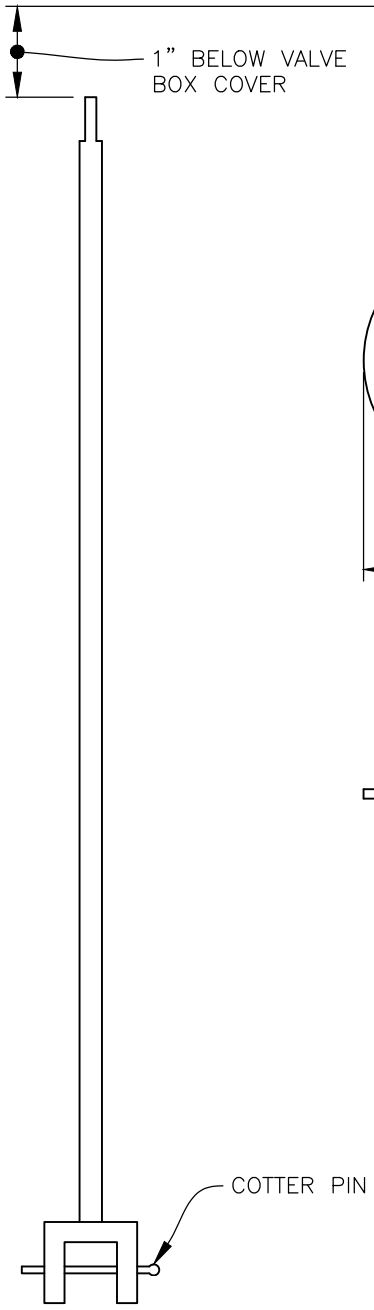

VALVE KEY EXTENSION

N.T.S.

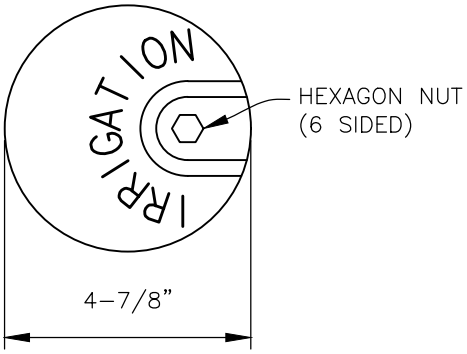

COVER PLAN

N.T.S.

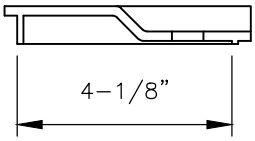

COVER ELEVATION

N.T.S.

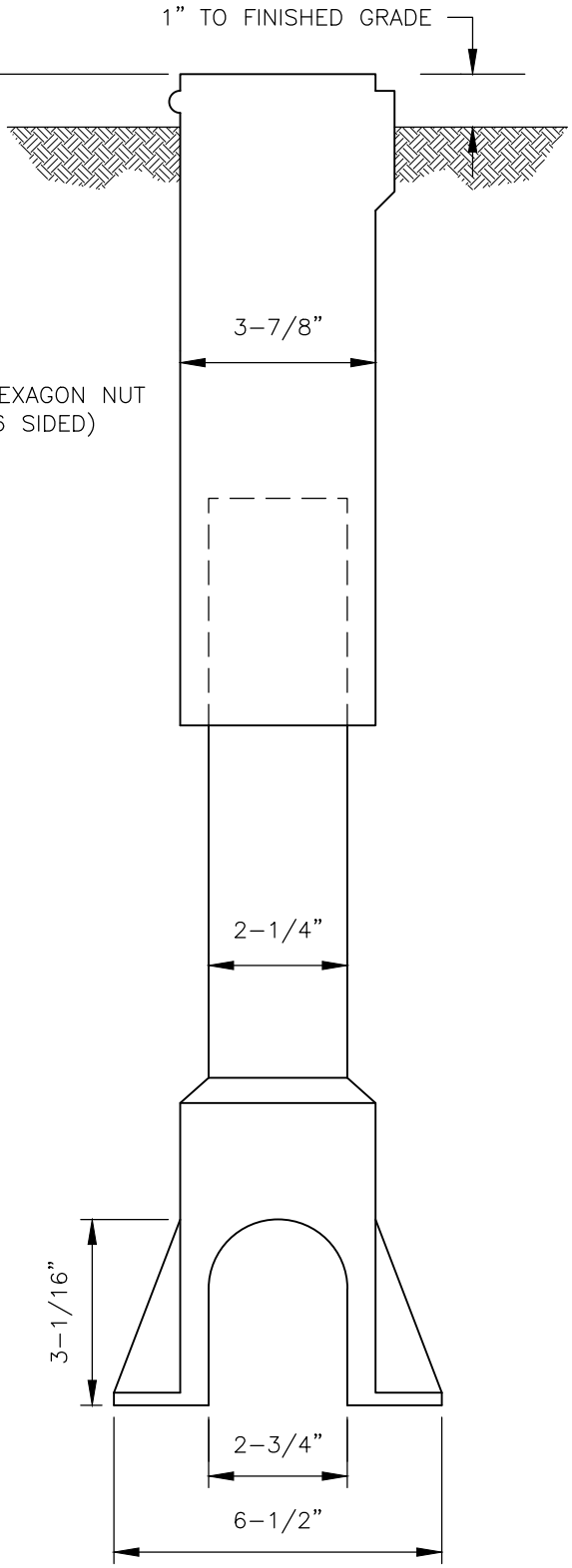

BOX TOP AND BOTTOM

N.T.S.

NOTE: VALVE KEY EXTENSION SHALL BE A 24" FORD CURB BOX "STATIONARY ROD," OR AN APPROVED EQUAL. NO FABRICATED EXTENSIONS WILL BE ALLOWED

REVISIONS:	SOUTH ADAMS COUNTY WATER AND SANITATION DISTRICT	WI-5
2/1/01		
8/1/02		
7/13/11	IRRIGATION STOP-AND-WASTE VALVE BOX, COVER, AND EXTENSION ROD	

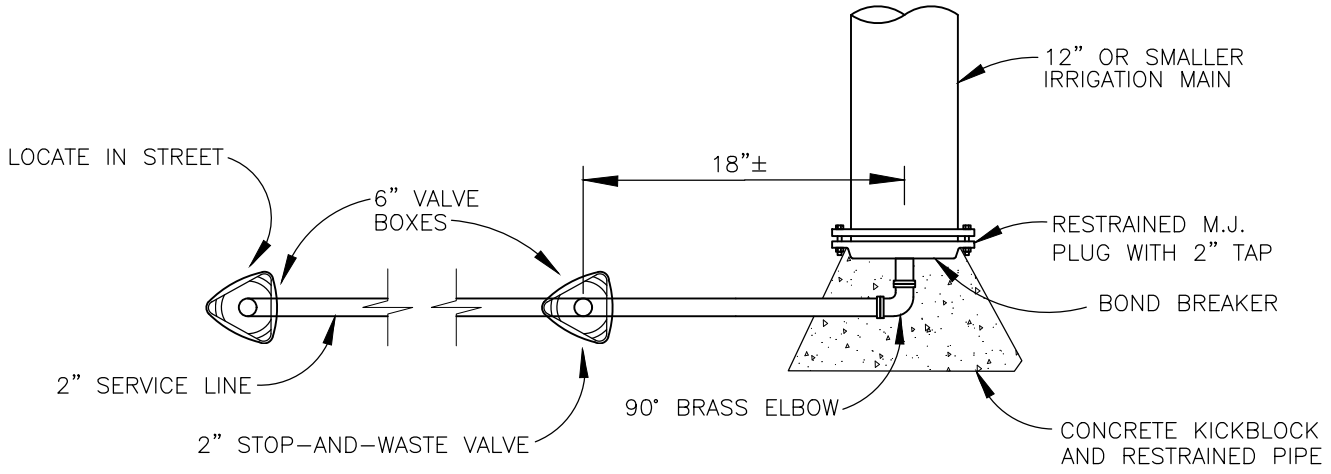

PLAN

N.T.S.

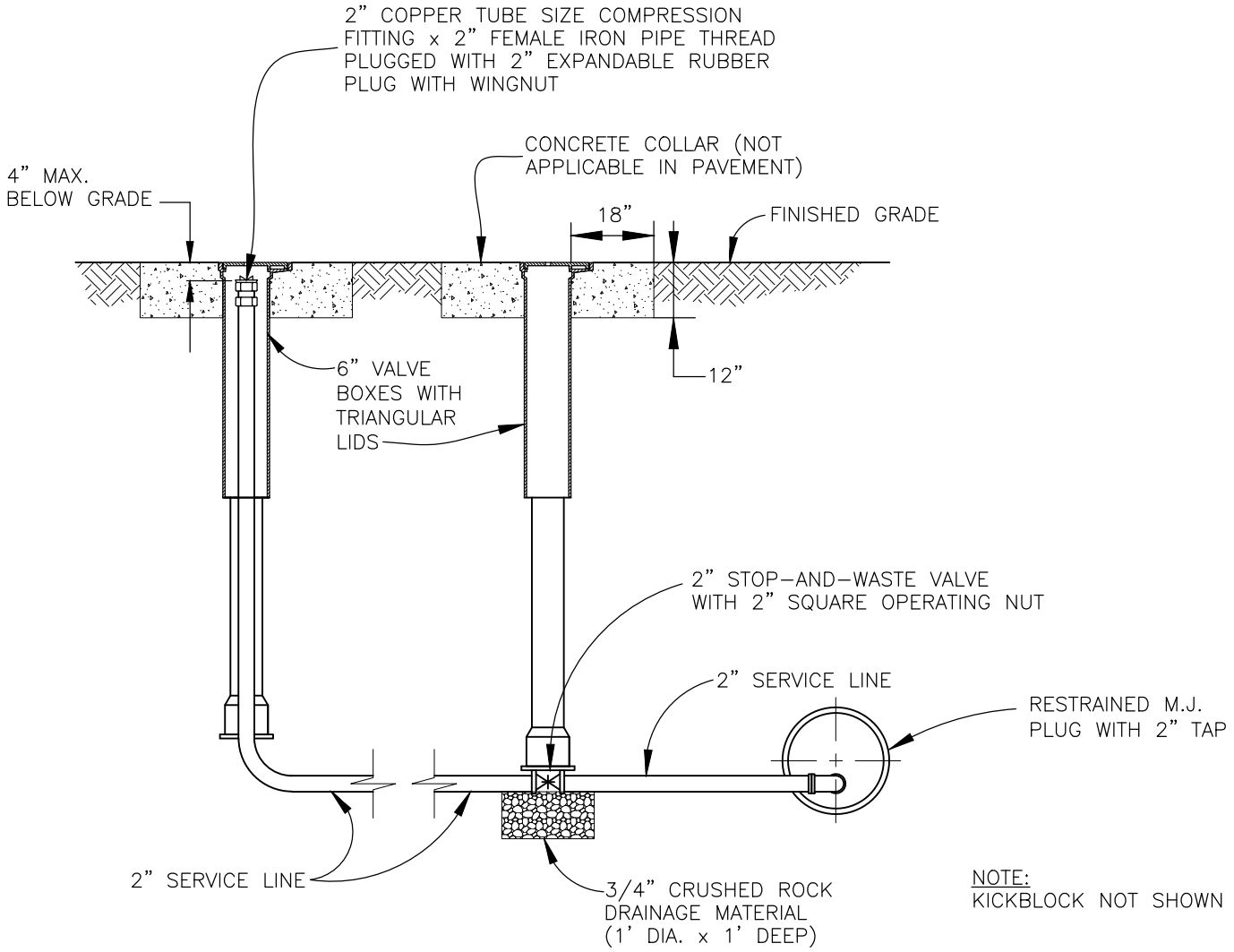

NOTE:
KICKBLOCK NOT SHOWN

ELEVATION

N.T.S.

REVISIONS:	SOUTH ADAMS COUNTY WATER AND SANITATION DISTRICT	WI-6
2/1/01		
8/1/02		
7/13/11	IRRIGATION BLOW-OFF INSTALLATION ON DEAD-END WATER LINE (12" AND SMALLER PIPE)	
1/27/17		

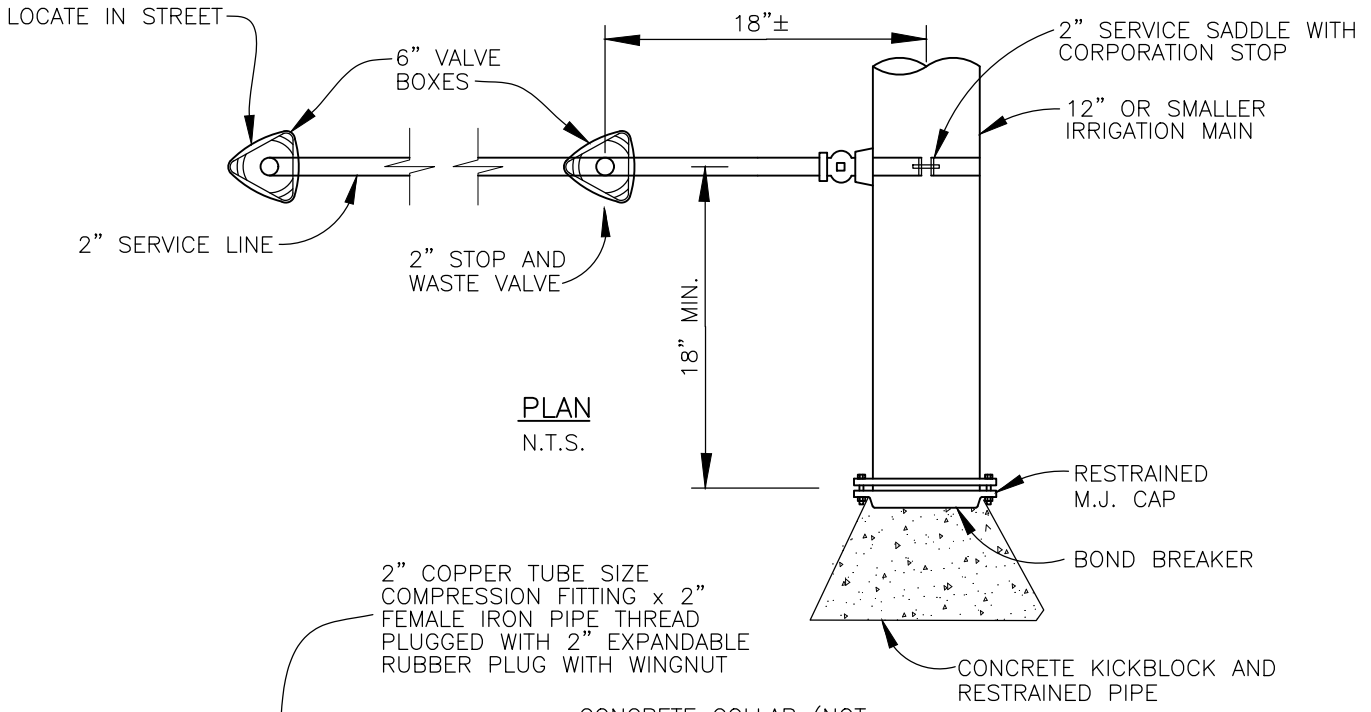

PLAN
N.T.S.

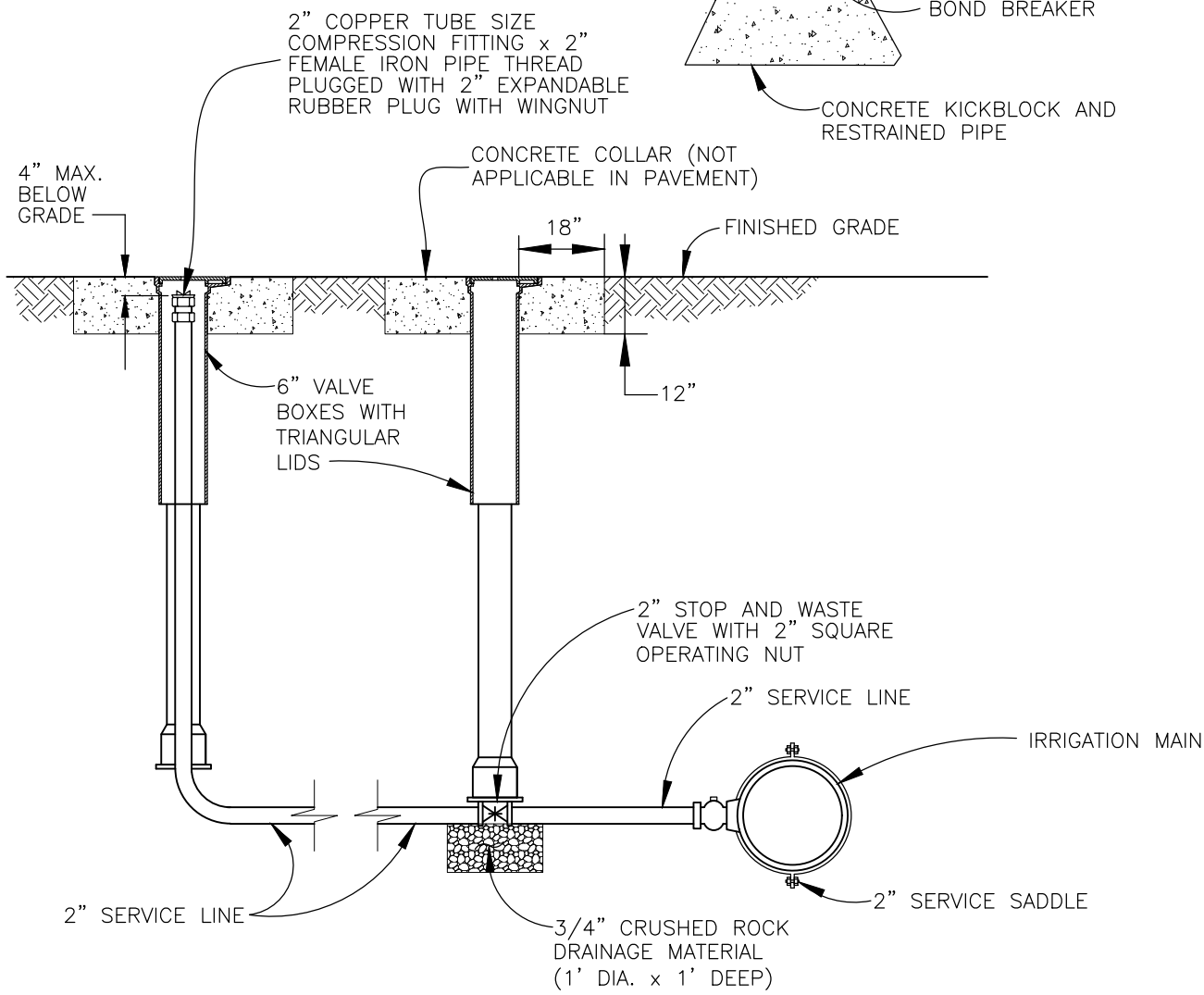

ELEVATION
N.T.S.

REVISIONS:	SOUTH ADAMS COUNTY WATER AND SANITATION DISTRICT	WI-7
6/7/00		
2/1/01		
7/13/11	IRRIGATION BLOW-OFF INSTALLATION USING SADDLE TAP (12" AND SMALLER PIPE)	
1/27/17		

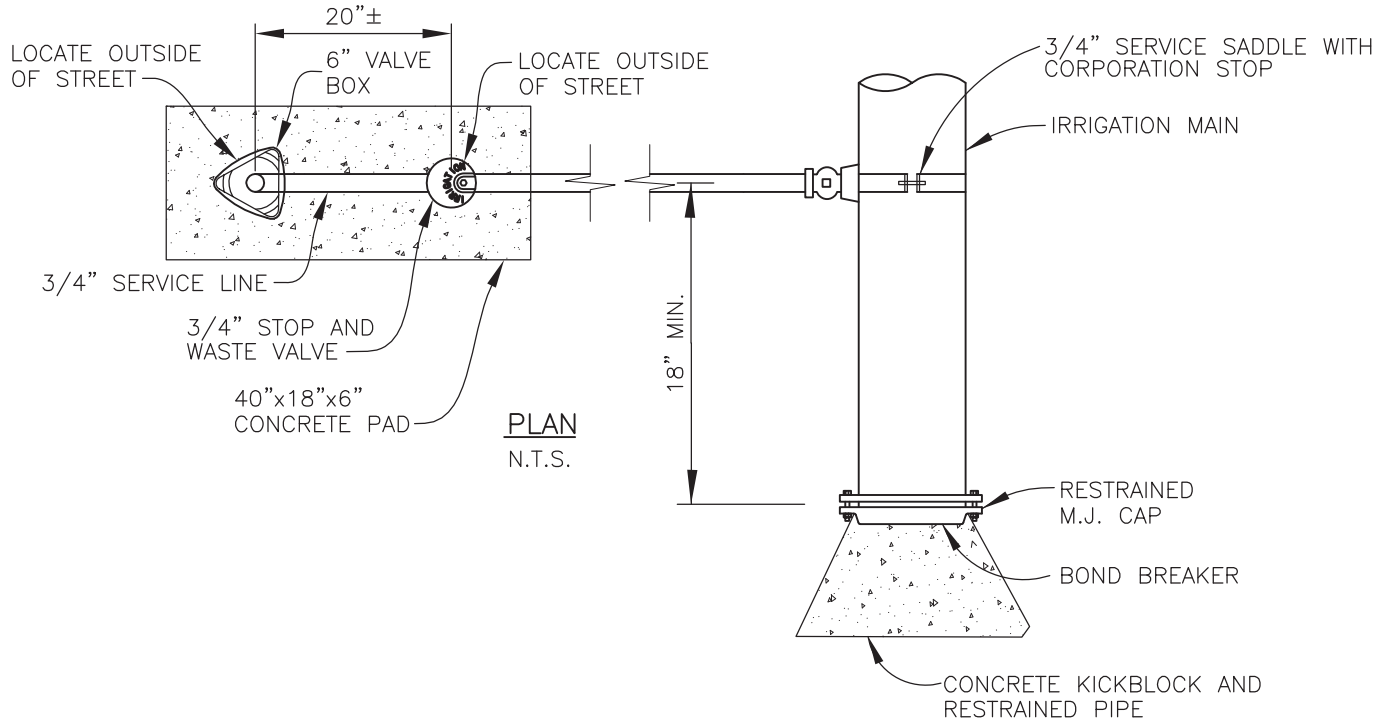

PLAN
N.T.S.

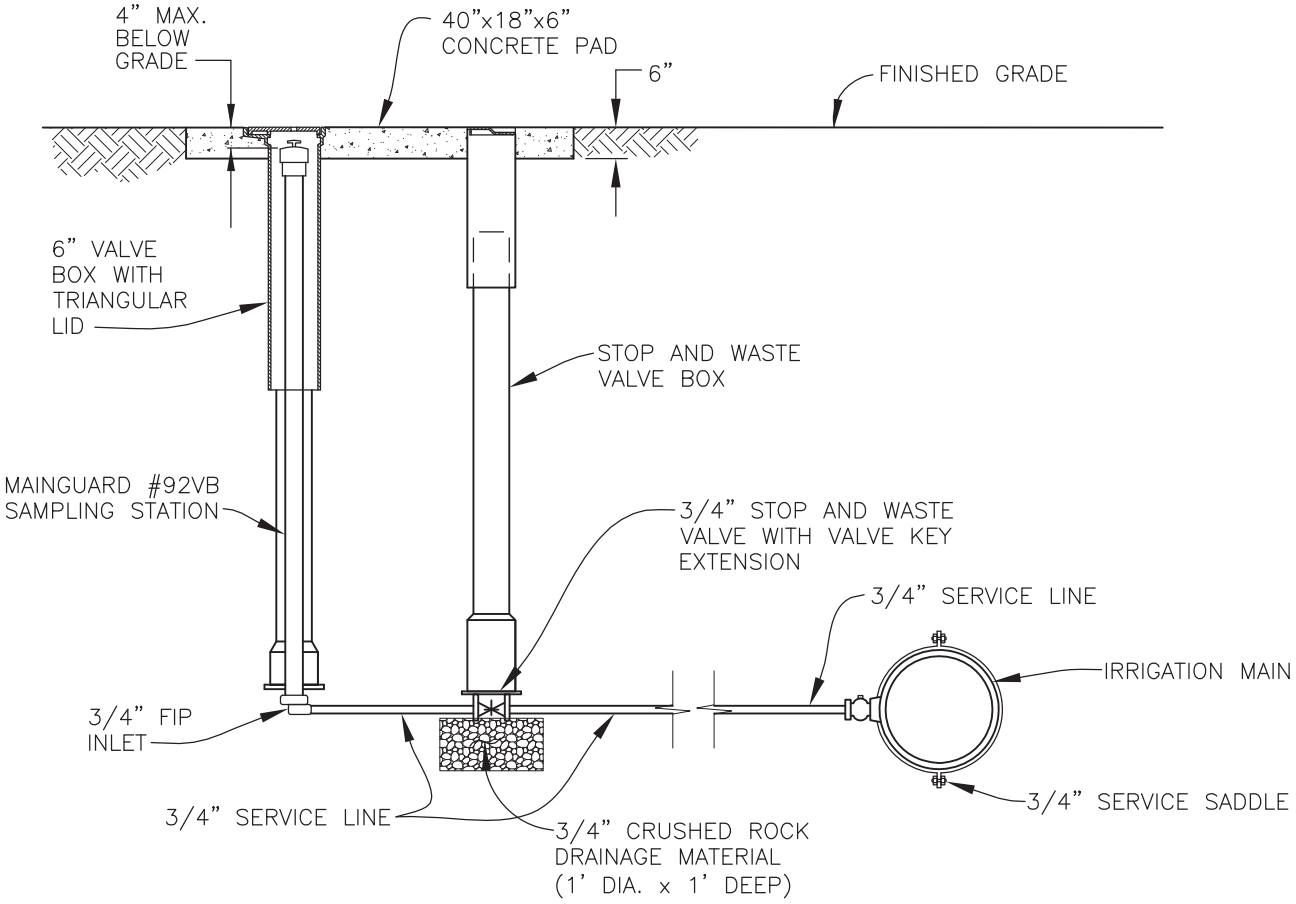

ELEVATION
N.T.S.

REVISIONS: 7/13/11	SOUTH ADAMS COUNTY WATER AND SANITATION DISTRICT	WI-8
	IRRIGATION SAMPLING STATION INSTALLATION	

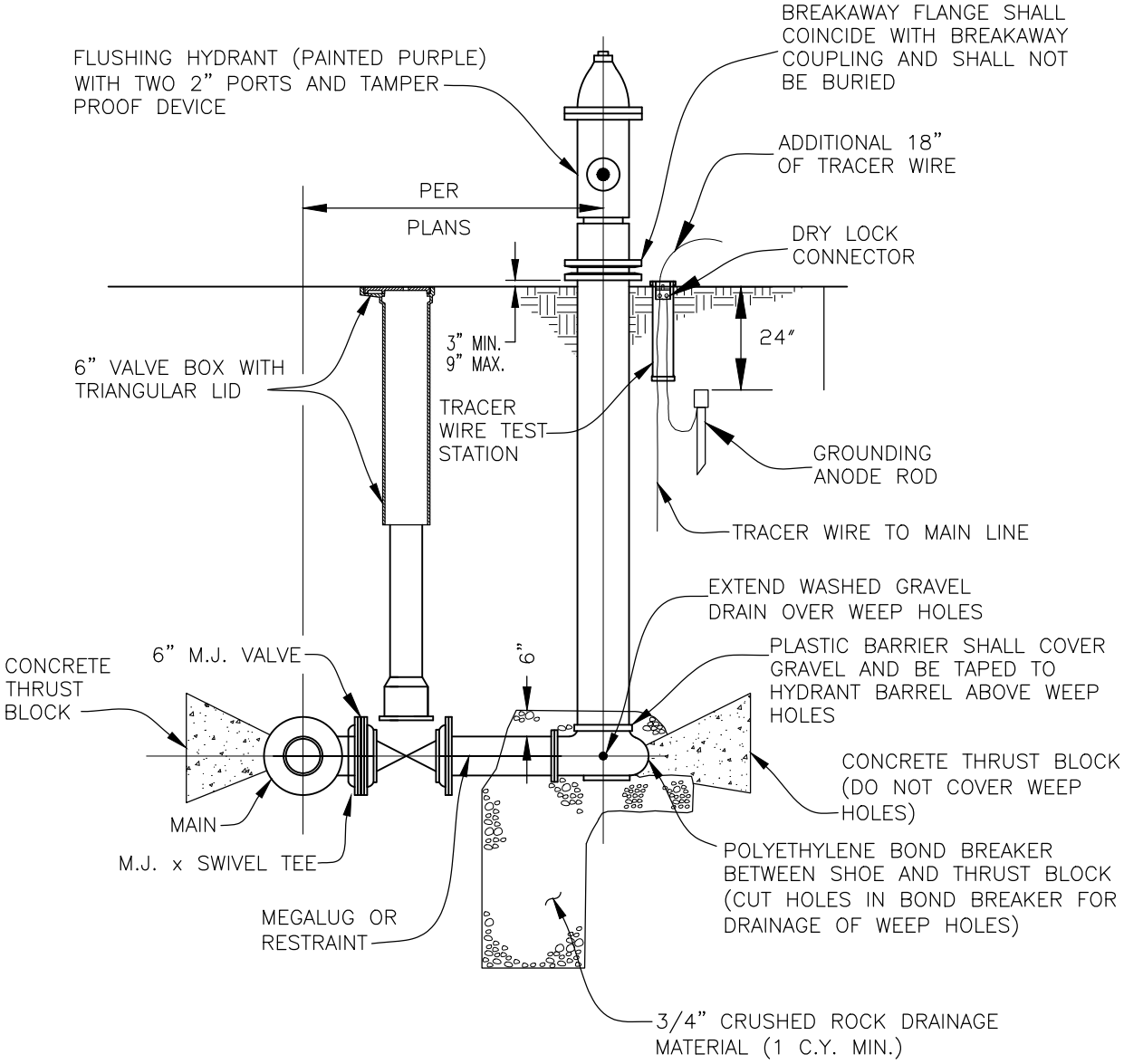

NOTE:

1. CONTRACTOR TO APPLY ANTI-SEIZE MATERIAL INSIDE TAMPER-PROOF DEVICE.

REVISIONS:	SOUTH ADAMS COUNTY WATER AND SANITATION DISTRICT	WI-9
7/13/11		
10/2/15		
	FLUSHING HYDRANT ASSEMBLY	

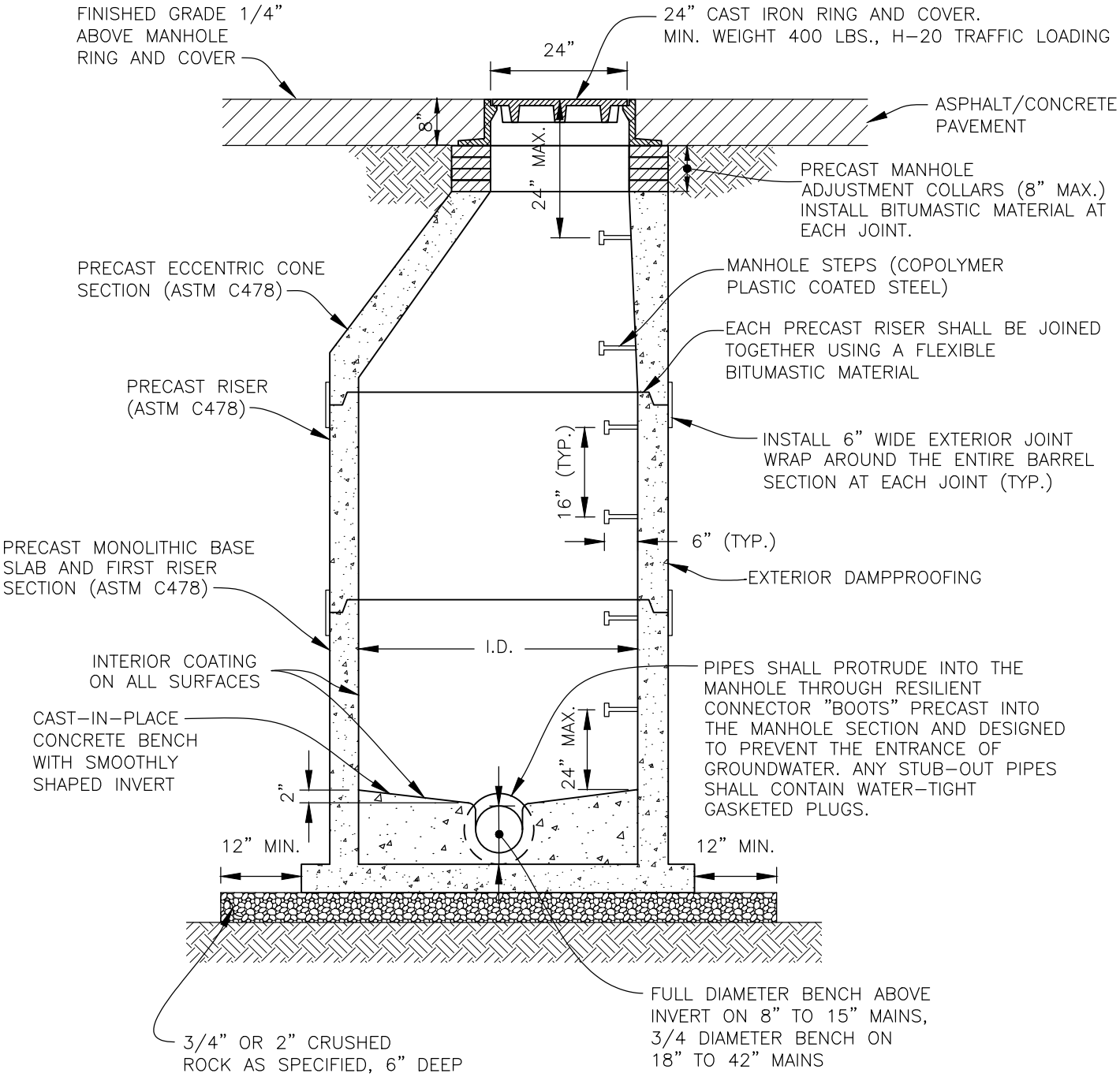

MANHOLE:

ID = 4' FOR SEWER MAIN DIAMETERS $\leq$ 24"

ID = 5' FOR SEWER MAIN DIAMETERS 27"-48"

REVISIONS:	SOUTH ADAMS COUNTY WATER AND SANITATION DISTRICT	S-1
2/1/01		
8/1/02		
7/13/11		
2/16/16	MANHOLE ON NEW SEWER	
1/27/17		

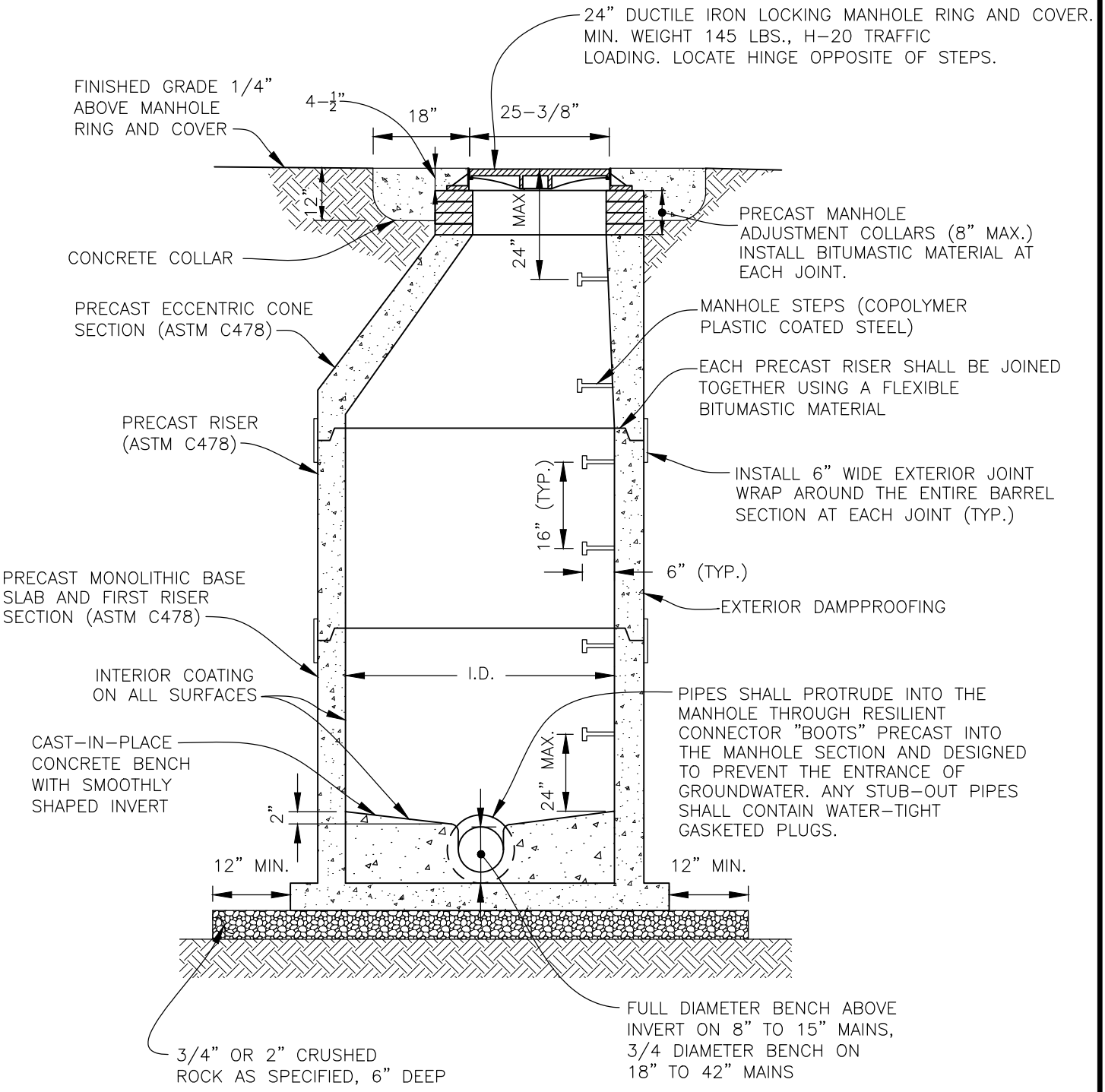

MANHOLE:

ID = 4' FOR SEWER MAIN DIAMETERS $\leq$ 24"

ID = 5' FOR SEWER MAIN DIAMETERS 27"-48"

REVISIONS:	SOUTH ADAMS COUNTY WATER AND SANITATION DISTRICT	S-1A
2/1/01		
8/1/02		
7/13/11	MANHOLE ON NEW SEWER LOCATED OUTSIDE OF PAVEMENT	
2/16/16		
1/27/17		

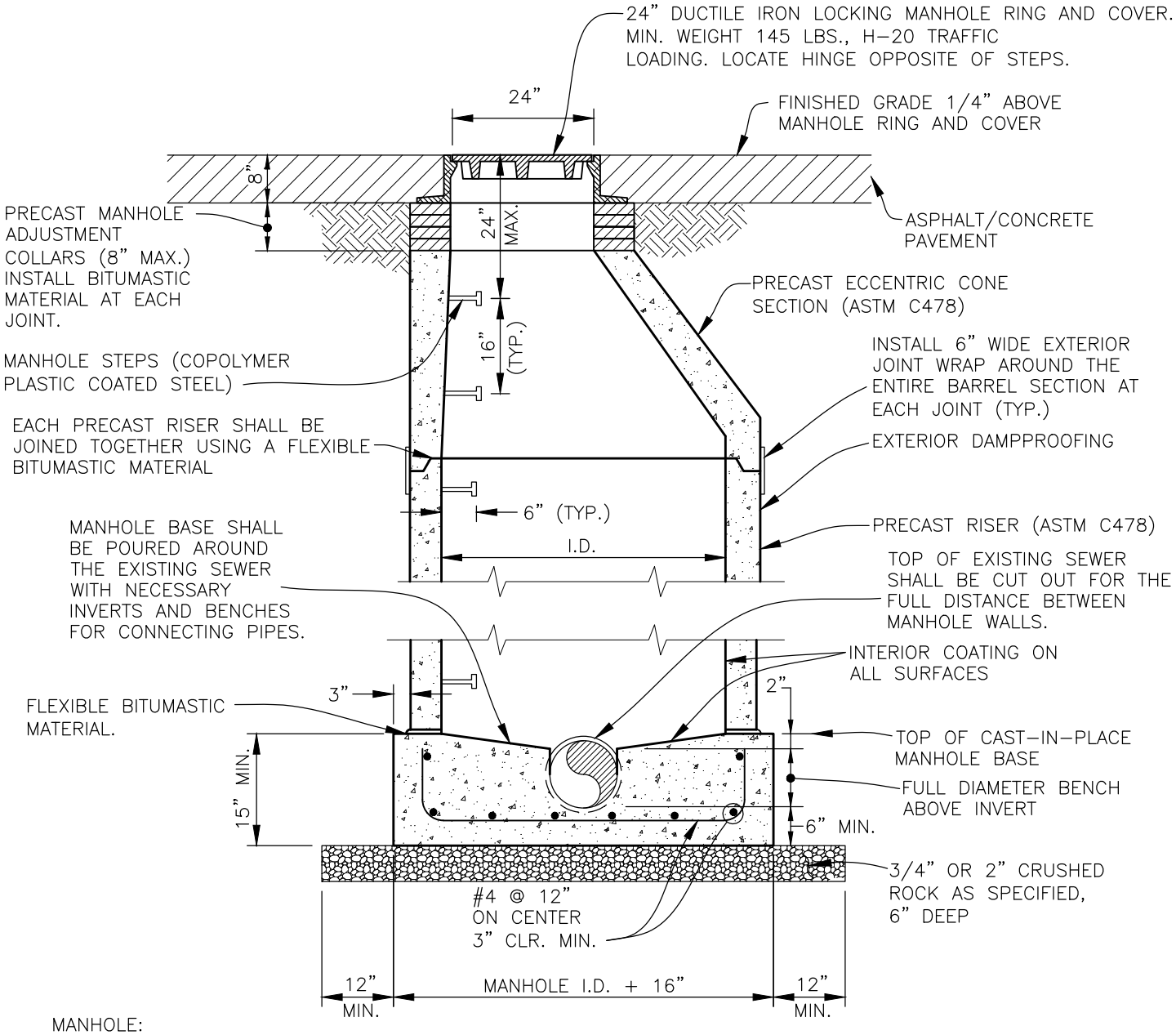

MANHOLE:

ID = 4' FOR SEWER MAIN DIAMETERS < 24"

ID = 5' FOR SEWER MAIN DIAMETERS 27"-48"

NOTE:

1. 4,000 PSI CONCRETE (28 DAY COMPRESSIVE STRENGTH) SHALL BE USED FOR THE CAST-IN-PLACE BASE.
2. A MINIMUM CURE TIME OF 3 DAYS FOR CAST-IN-PLACE MANHOLE BASE SHALL BE REQUIRED PRIOR TO SETTING MANHOLE BARREL SECTIONS ON THE BASE AND BACKFILLING AROUND IT.

REVISIONS:	SOUTH ADAMS COUNTY WATER AND SANITATION DISTRICT	S-2
2/1/01		
8/1/02		
7/13/11		
2/16/16	MANHOLE ON EXISTING SEWER	
1/27/17		

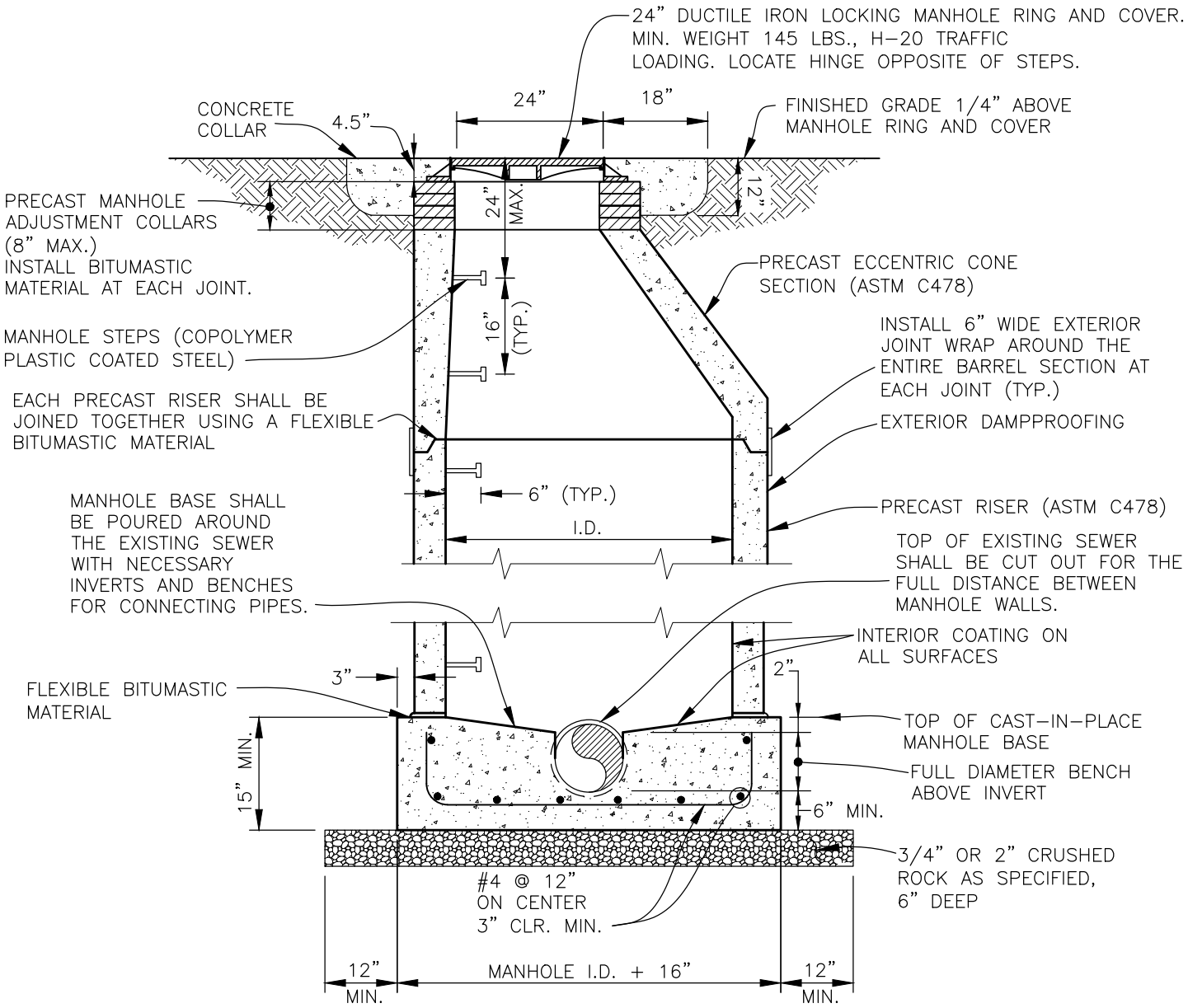

MANHOLE:

ID = 4' FOR SEWER MAIN DIAMETERS < 24"

ID = 5' FOR SEWER MAIN DIAMETERS 27"-48"

NOTE:

1. 4,000 PSI CONCRETE (28 DAY COMPRESSIVE STRENGTH) SHALL BE USED FOR THE CAST-IN-PLACE BASE.
2. A MINIMUM CURE TIME OF 3 DAYS FOR CAST-IN-PLACE MANHOLE BASE SHALL BE REQUIRED PRIOR TO SETTING MANHOLE BARREL SECTIONS ON THE BASE AND BACKFILLING AROUND IT.

REVISIONS:	SOUTH ADAMS COUNTY WATER AND SANITATION DISTRICT	S-2A
2/1/01		
8/1/02		
7/13/11	MANHOLE ON EXISTING SEWER LOCATED OUTSIDE PAVEMENT	
2/16/16		
1/27/17		

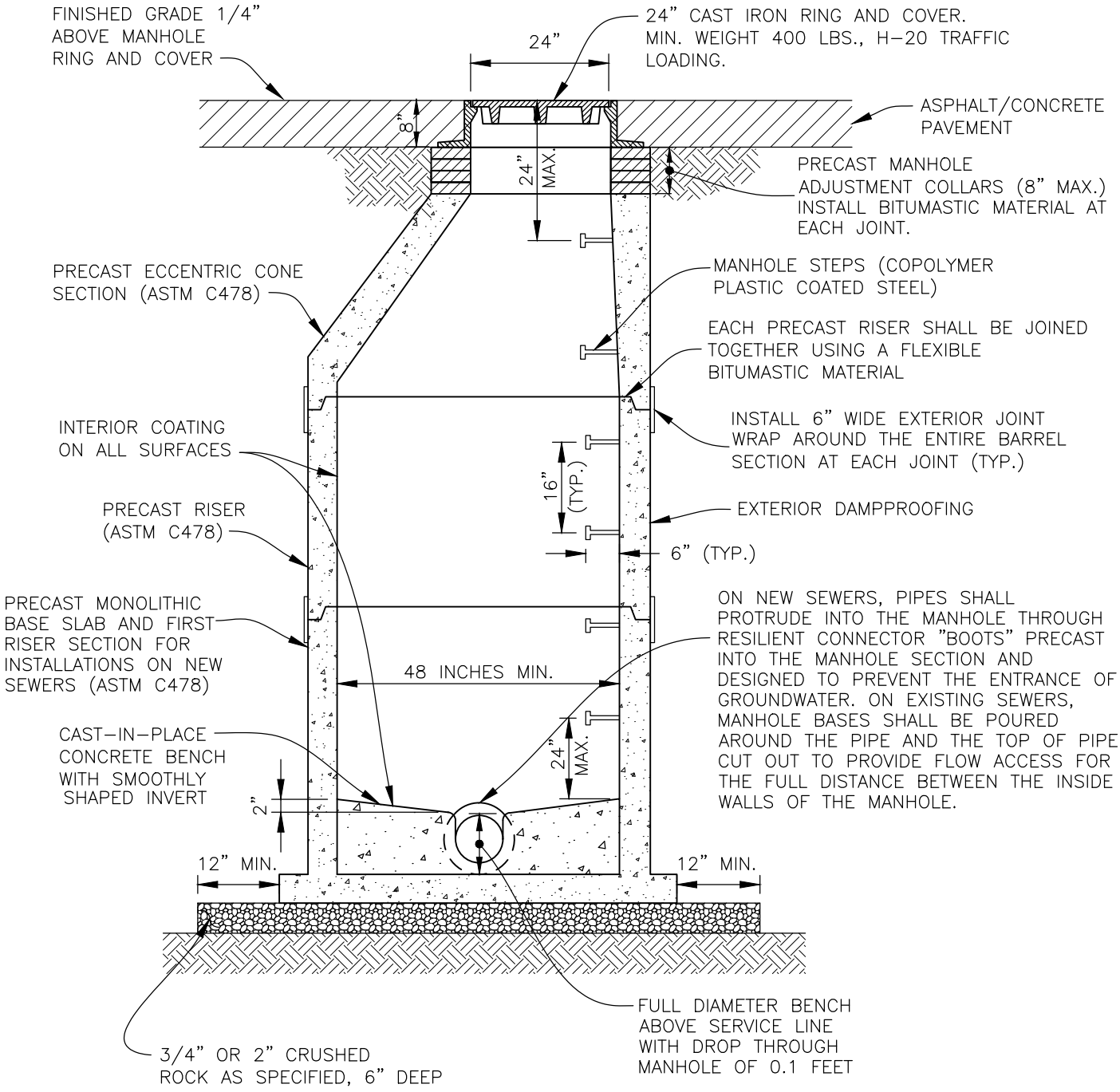

REVISIONS:	SOUTH ADAMS COUNTY WATER AND SANITATION DISTRICT	S-3
2/1/01		
8/1/02		
7/13/11		
2/16/16	SAMPLING MANHOLE	
1/27/17		

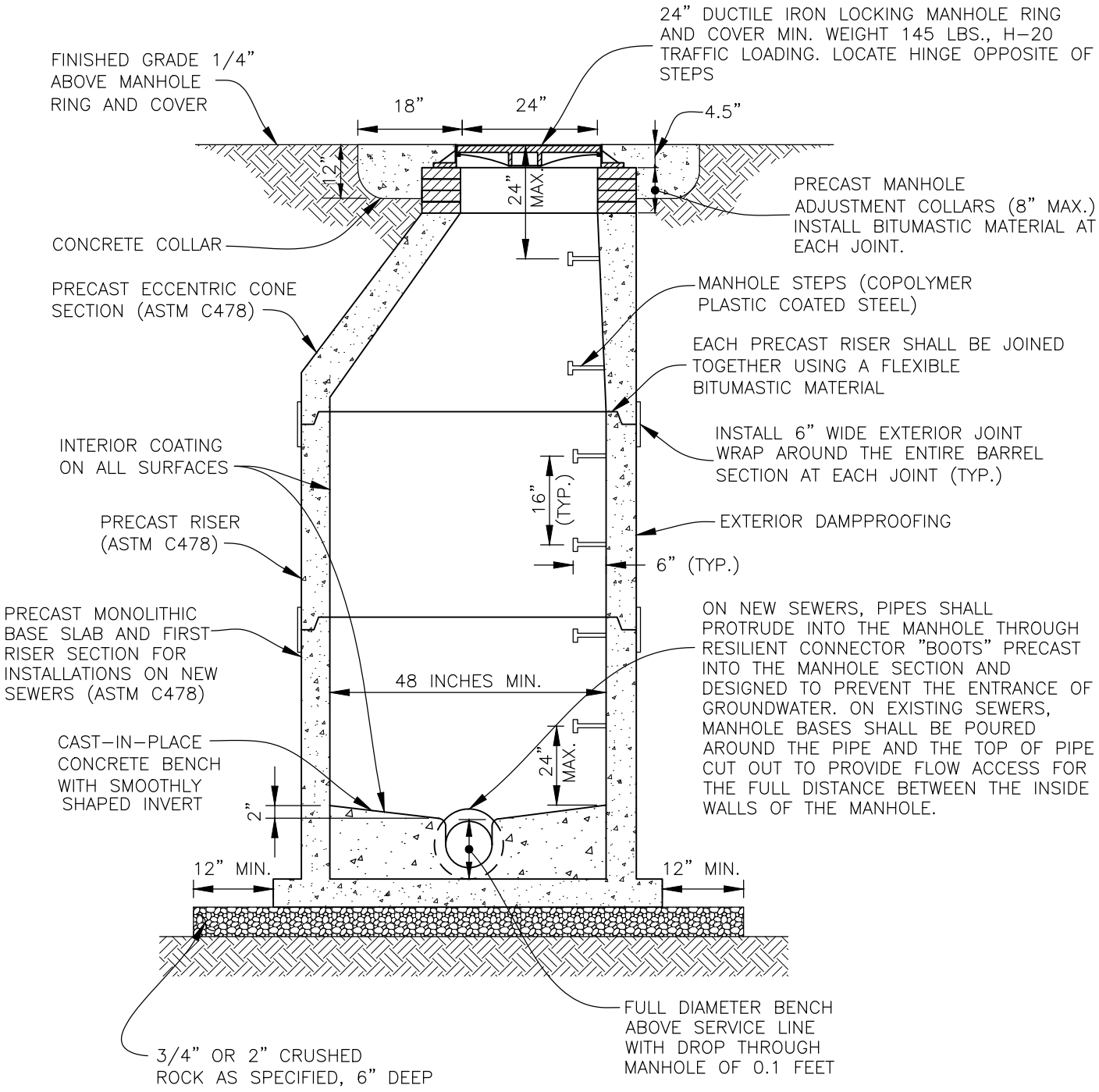

REVISIONS:	SOUTH ADAMS COUNTY WATER AND SANITATION DISTRICT	S-3A
2/1/01		
8/1/02		
7/13/11	SAMPLING MANHOLE LOCATED OUTSIDE OF PAVEMENT	
2/16/16		
1/27/17		

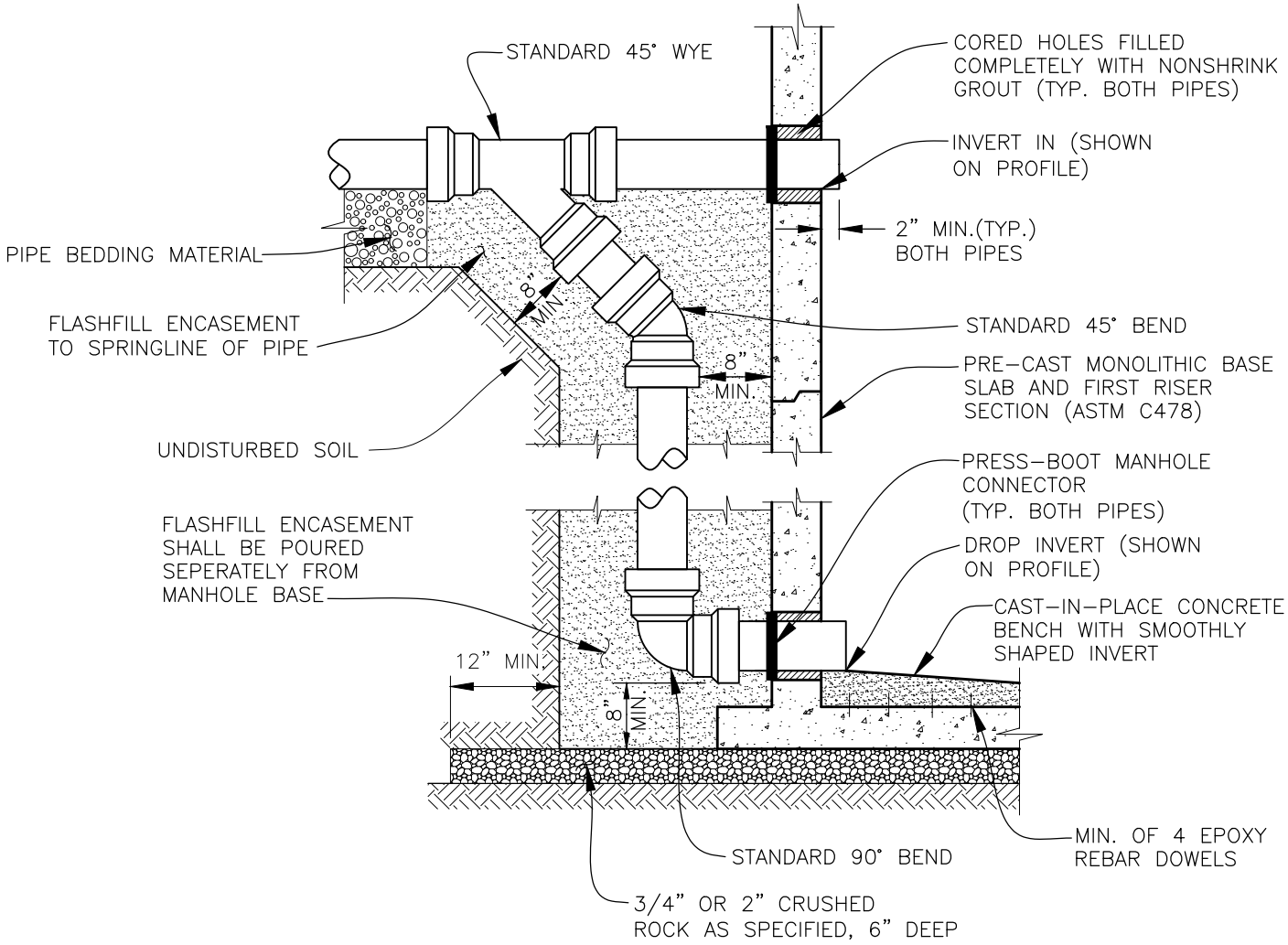

NOTES:

1. USE OF OUTSIDE DROP MANHOLES SHALL BE APPROVED BY THE DISTRICT.
2. FLASHFILL ENCASEMENT SHALL BE MIN. 8" THICK ALL AROUND DROP PIPE.
3. DIAMETER OF DROP PIPE SHALL NOT BE LESS THAN THE MAIN DIAMETER.
4. PRESS-BOOT CONNECTOR SUPPLIED BY PRESS-SEAL GASKET CORP. OR APPROVED EQUAL.
5. NEW MANHOLE INSTALLATIONS SHALL HAVE EXTERIOR DAMPPROOFING AND INTERIOR PROTECTIVE COATINGS.

REVISIONS:	SOUTH ADAMS COUNTY WATER AND SANITATION DISTRICT	S-4
6/7/00		
2/1/01		
8/1/02		
7/13/11	OUTSIDE DROP MANHOLE	
2/16/16		

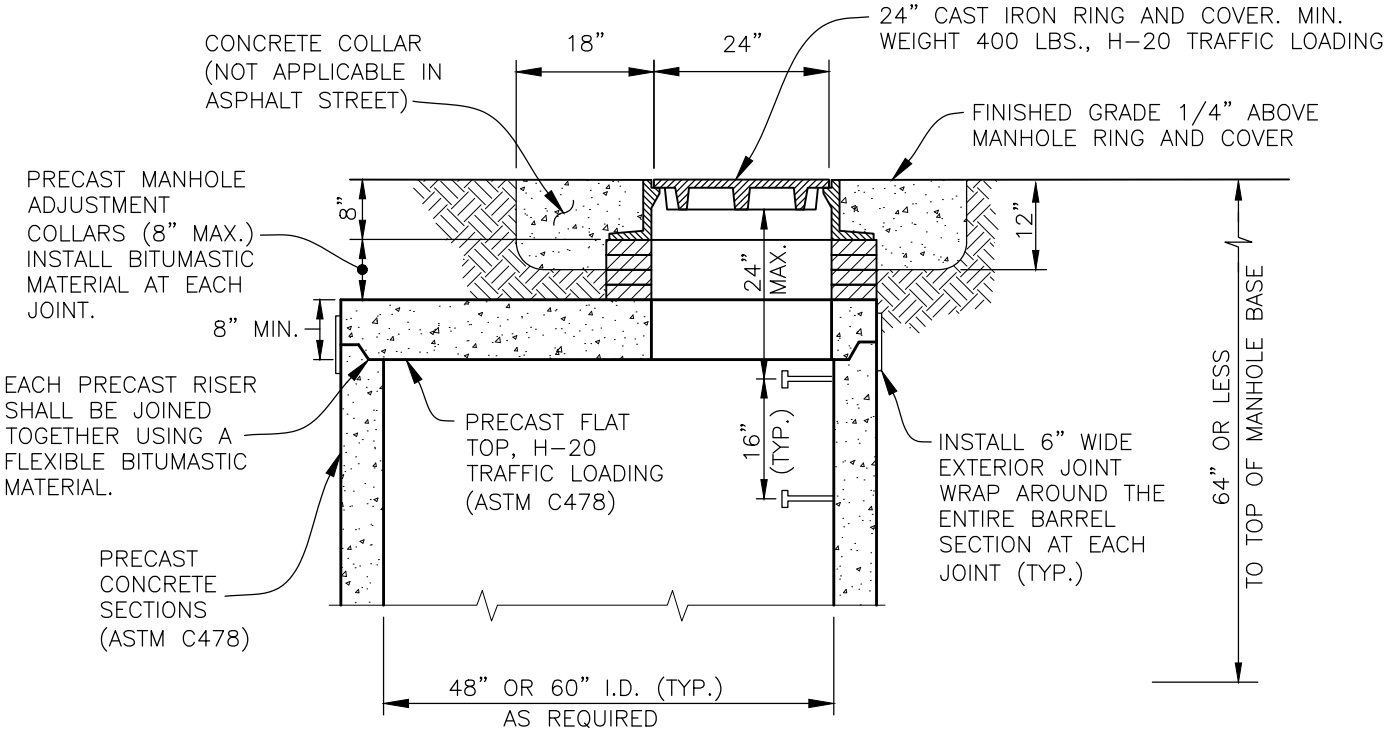

REVISIONS:	SOUTH ADAMS COUNTY WATER AND SANITATION DISTRICT	S-5
6/7/00		
2/1/01		
8/1/02	SHALLOW MANHOLE TOP	
7/13/11		

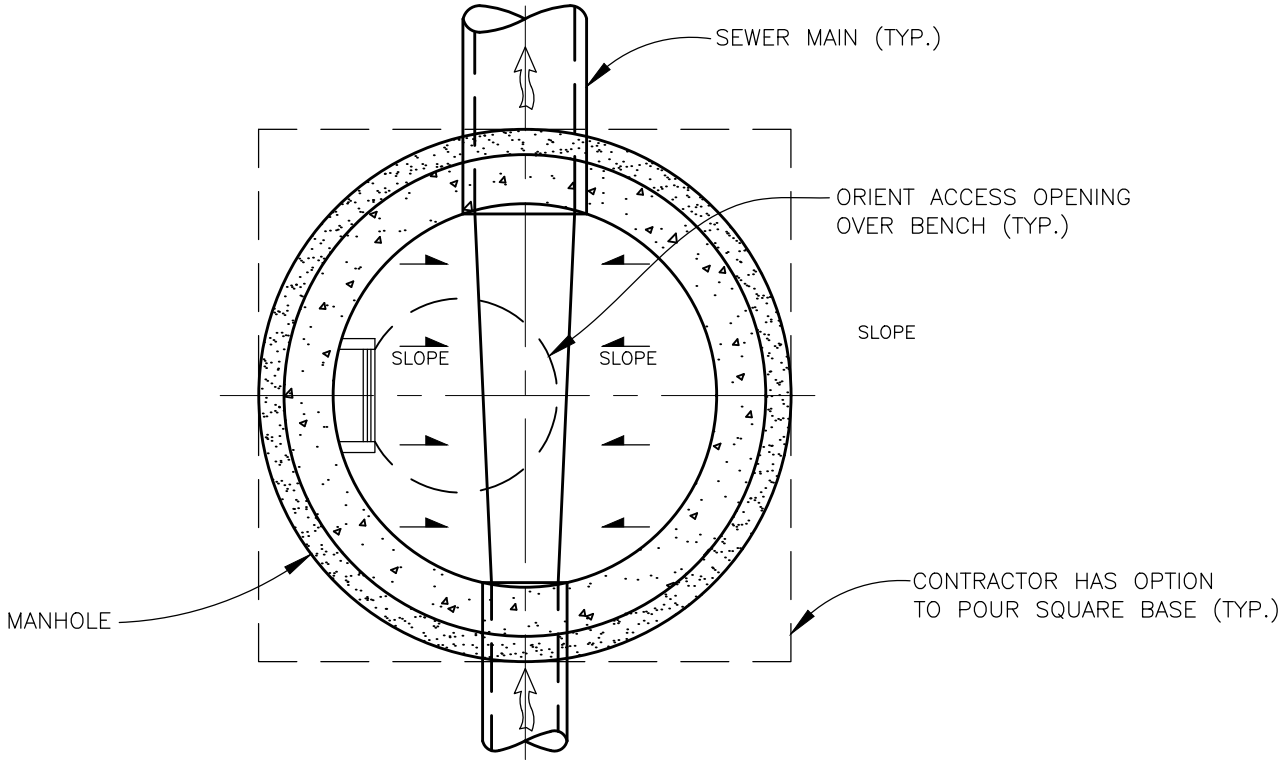

CHANGE IN PIPE SIZE

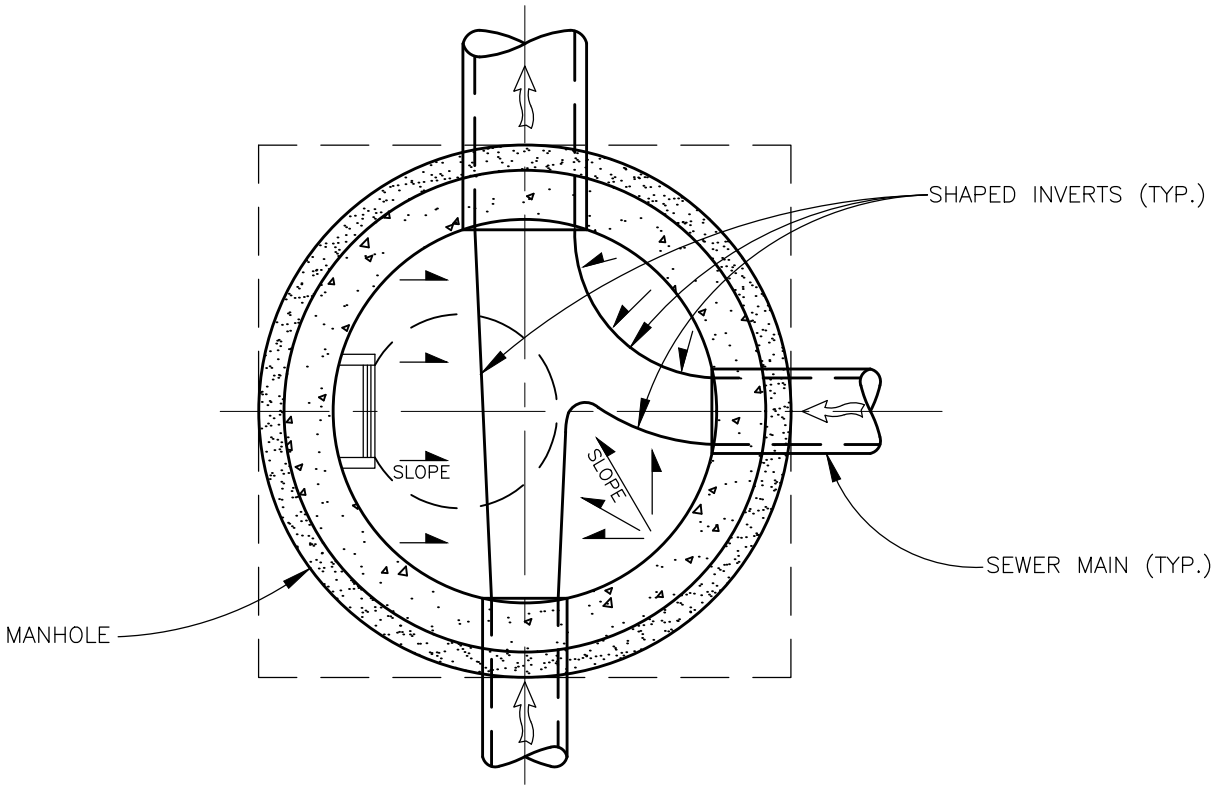

JUNCTION MANHOLE OR ALIGNMENT CHANGE

REVISIONS:	SOUTH ADAMS COUNTY WATER AND SANITATION DISTRICT	S-6
6/7/00		
8/1/02		
7/13/11	MANHOLE INVERTS	

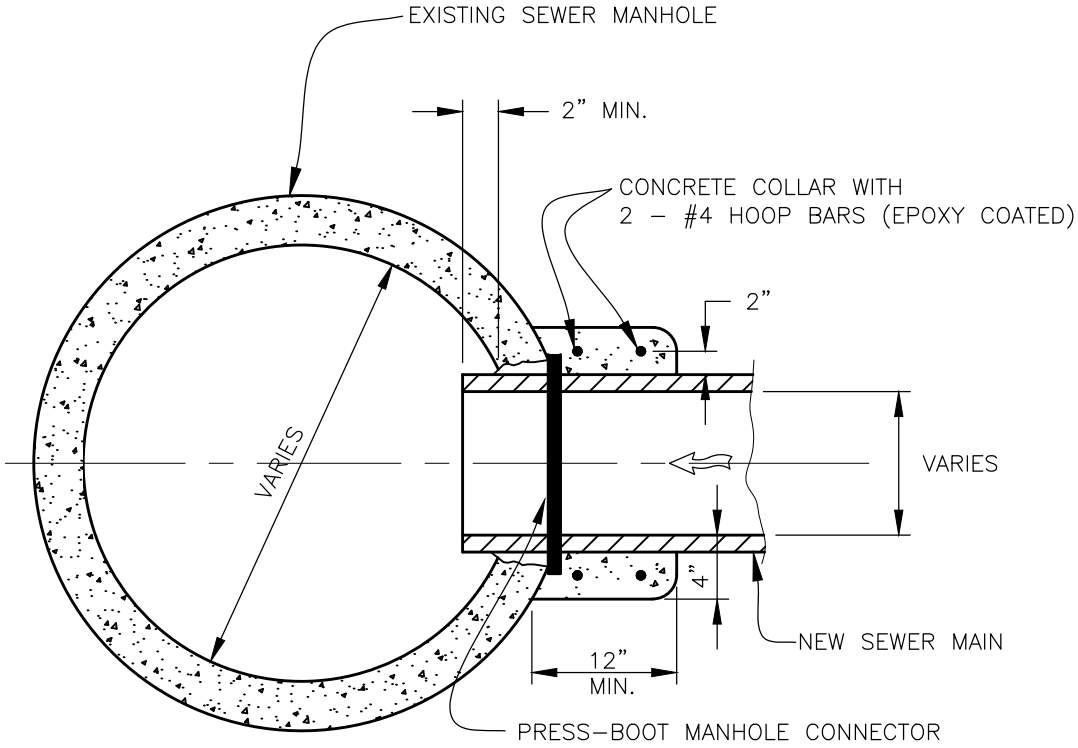

NOTES:

1. CORE DRILL HOLE THROUGH MANHOLE WALL WHENEVER POSSIBLE.
2. WHEN LARGER MAINS PROHIBIT CORING OF MANHOLE WALL, THE HOLE SHALL BE MADE AS SMOOTHLY AND UNIFORMLY AS POSSIBLE AND SHALL BE NO LARGER THAN NECESSARY TO ACCOMODATE THE SIZE OF THE CONNECTING MAIN.
3. PRESS–BOOT CONNECTOR SUPPLIED BY PRESS–SEAL GASKET CORP. OR APPROVED EQUAL.

REVISIONS:	SOUTH ADAMS COUNTY WATER AND SANITATION DISTRICT	S-7
6/7/00 2/1/01 8/1/02 7/13/11	SEWER MAIN CONNECTION TO EXISTING MANHOLE	

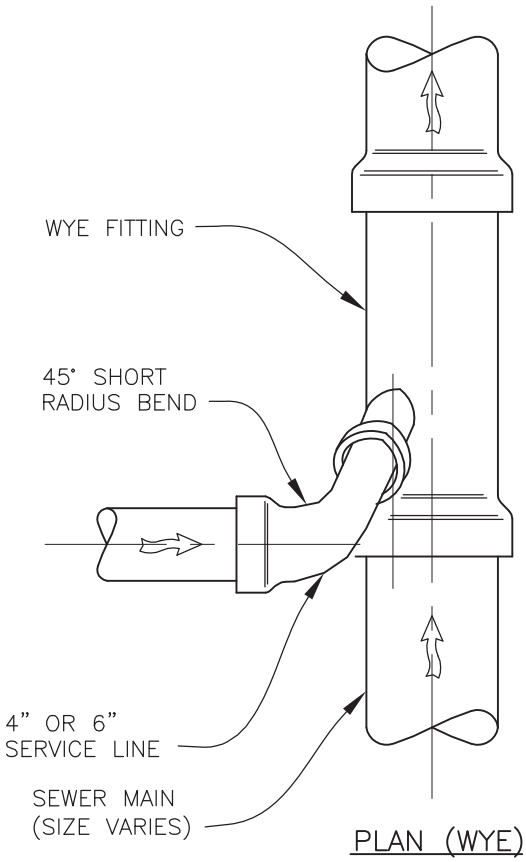

PLAN (WYE)

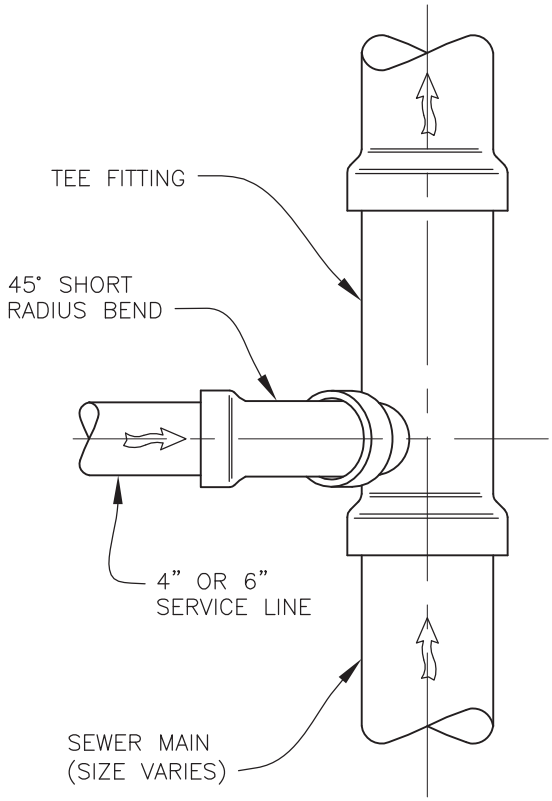

PLAN (TEE)

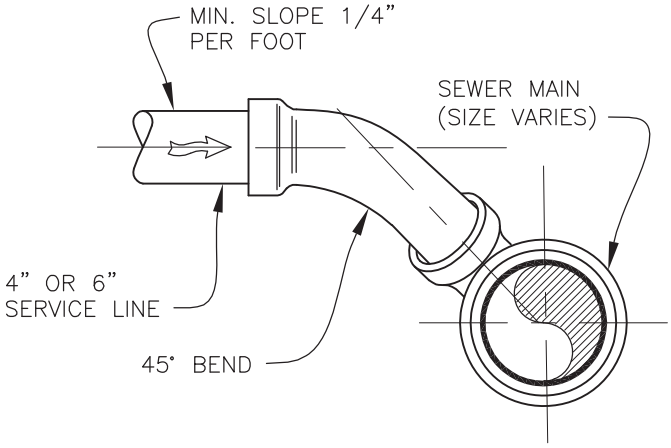

ELEVATION (WYE CONNECTION)

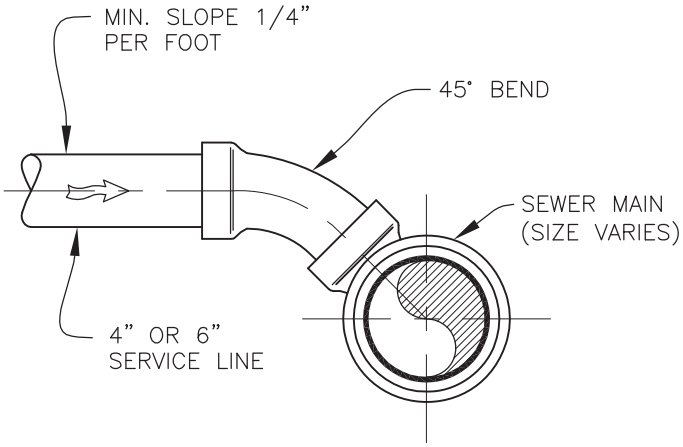

ELEVATION (TEE CONNECTION)

NOTE:
FINAL ORIENTATION OF WYES AND TEES SHALL BE AT THE 10 OR 2 O'CLOCK POSITION.

REVISIONS:	SOUTH ADAMS COUNTY WATER AND SANITATION DISTRICT	S-8
6/7/00		
8/1/02		
7/13/11	4" OR 6" SEWER SERVICE LINE CONNECTIONS	

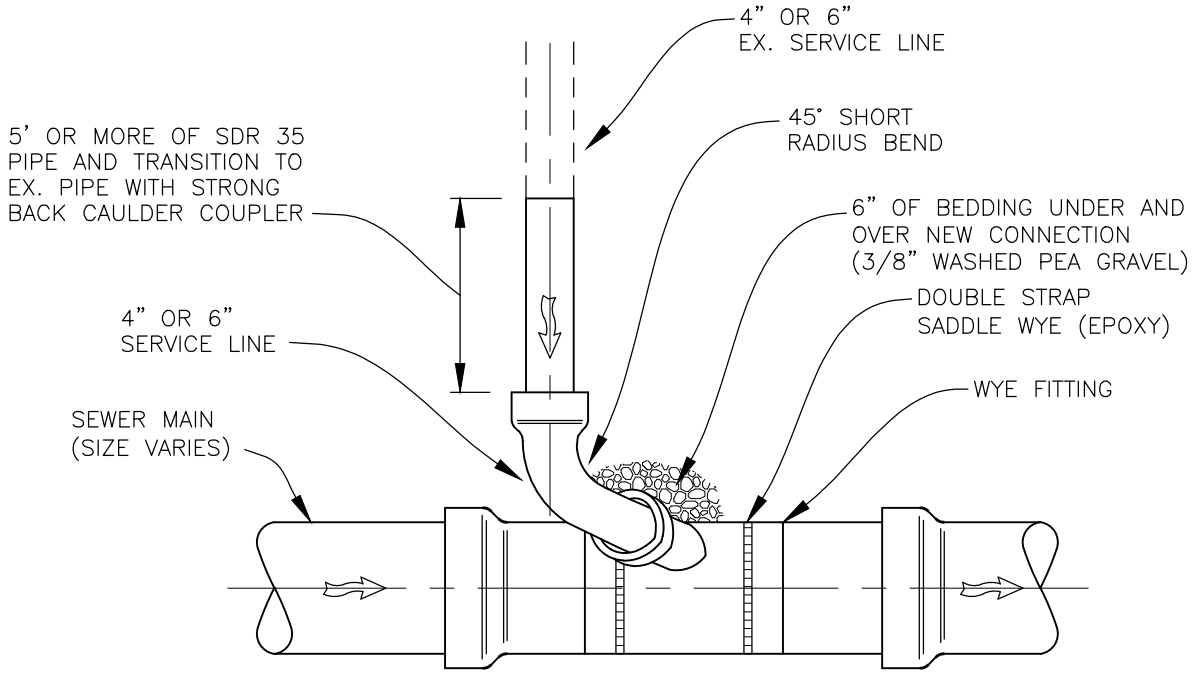

EXISTING SERVICE CONNECTION REHABILITATION

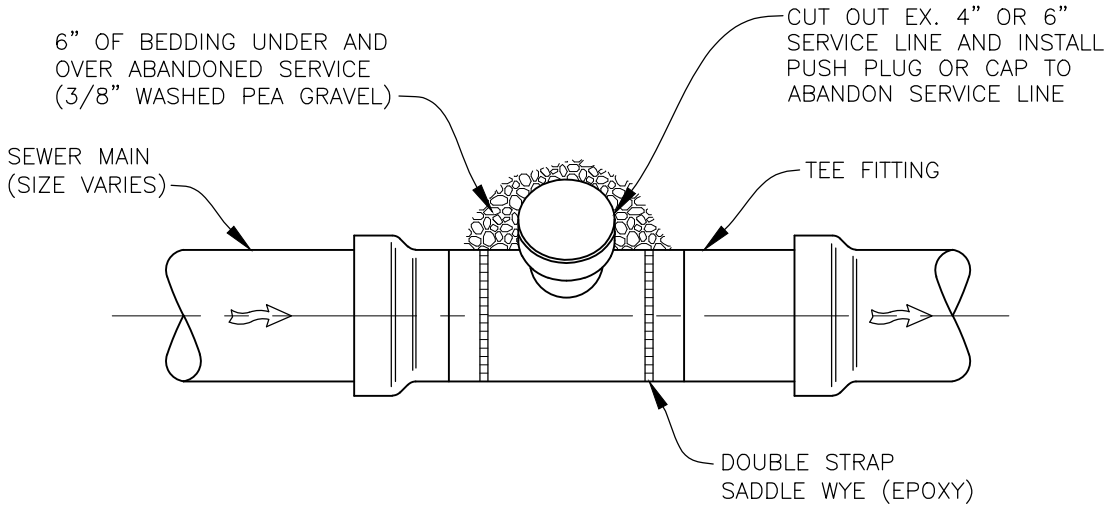

SERVICE TAP ABANDONMENT

NOTE:
1. IF USING FLASH FILL BACKFILL, 6–8" OF WASHED PEA GRAVEL BEDDING SHALL BE PLACED OVER NEW FITTINGS PRIOR TO FLASH FILL PLACEMENT.
2. CIPP POINT REPAIR CAN BE USED AS AN ALTERNATIVE TO ABANDON A SERVICE TAP.

REVISIONS:	SOUTH ADAMS COUNTY WATER AND SANITATION DISTRICT	S-8A
6/7/00		
8/1/02		
7/13/11	SEWER SERVICE LINE CONNECTION REHABILITATION/ SERVICE TAP ABANDONMENT	
2/23/16		

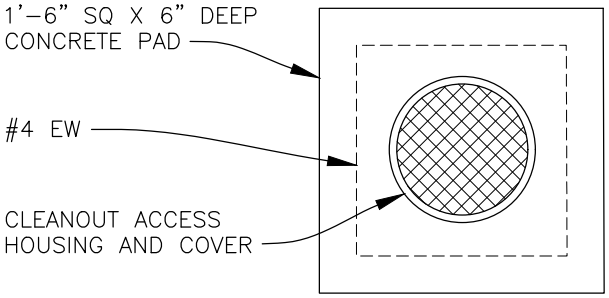

PLAN

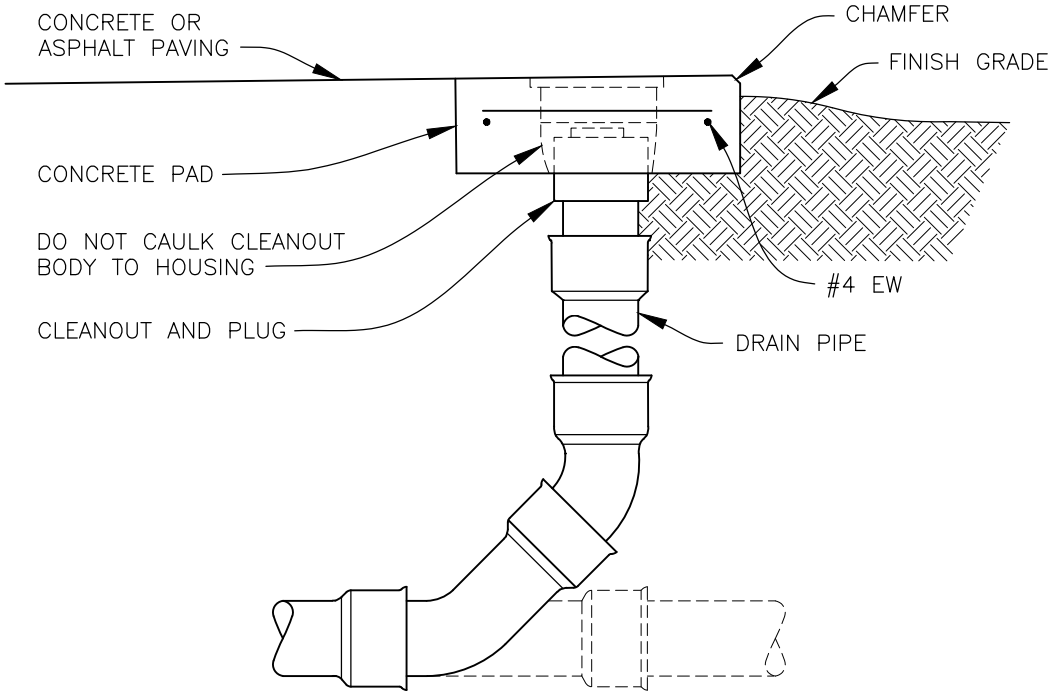

SECTION

REVISIONS:		
7/13/11	**SOUTH ADAMS COUNTY WATER AND SANITATION DISTRICT**	S-9
	AT GRADE COMMERCIAL SERVICE LINE CLEANOUT	

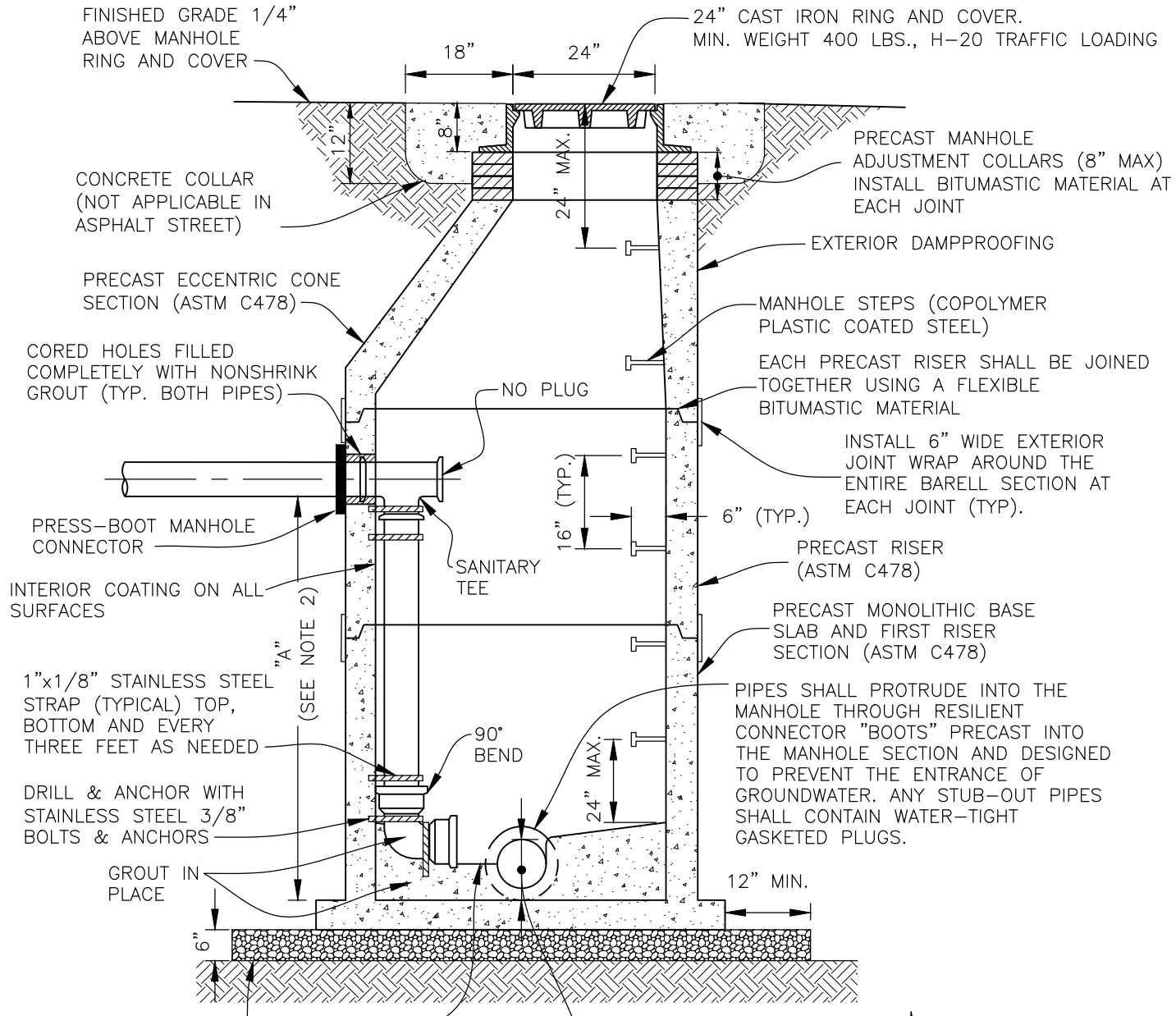

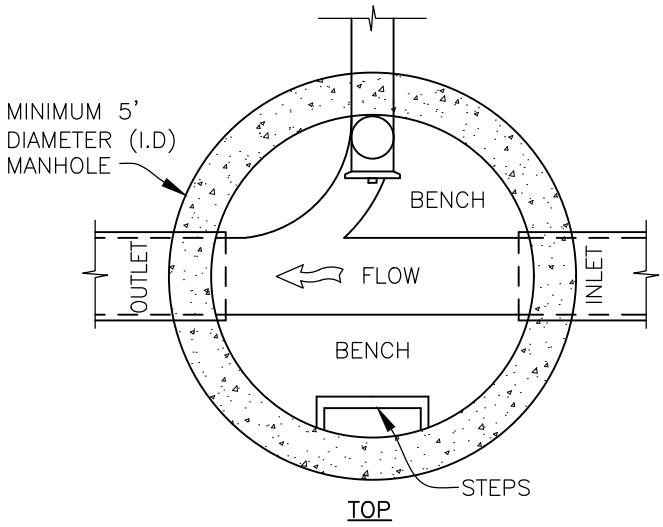

NOTES:

1. A DROP MANHOLE IS REQUIRED WHEN THE "A" DIMENSION SHOWN ABOVE EXCEEDS 18".
2. A LARGER DIAMETER MANHOLE MAY BE REQUIRED FOR PIPE EXCEEDING 8" IN DIAMETER.
3. WHEN TYING INTO AN EXISTING MANHOLE, THE BENCH SHALL BE ALTERED TO MODIFY THE FLOW DIRECTION FOR THE NEW INSIDE DROP PIPING AND INVERT.
4. THE INVERT FOR THE PIPE ENTERING THE MANHOLE AND AT THE 90° BEND SHALL BE IDENTIFIED ON THE PLANS.

REVISIONS:	SOUTH ADAMS COUNTY WATER AND SANITATION DISTRICT	S-10
7/13/11	INSIDE DROP MANHOLE DETAIL	

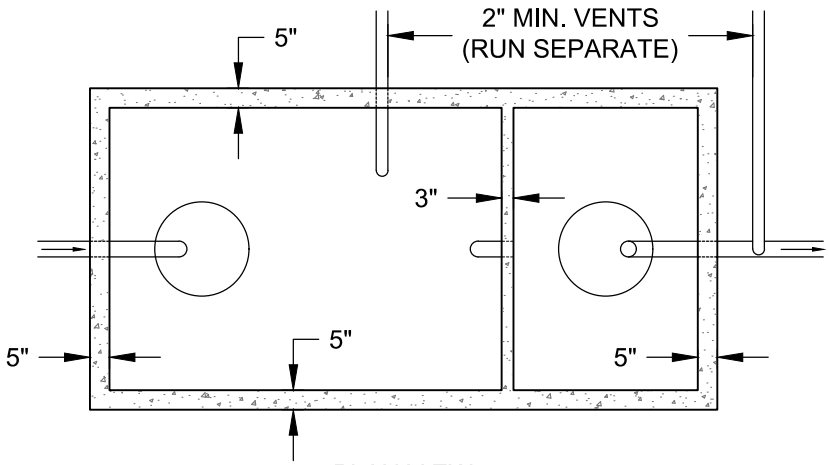

PLAN VIEW
SCALE: 1" = 4'

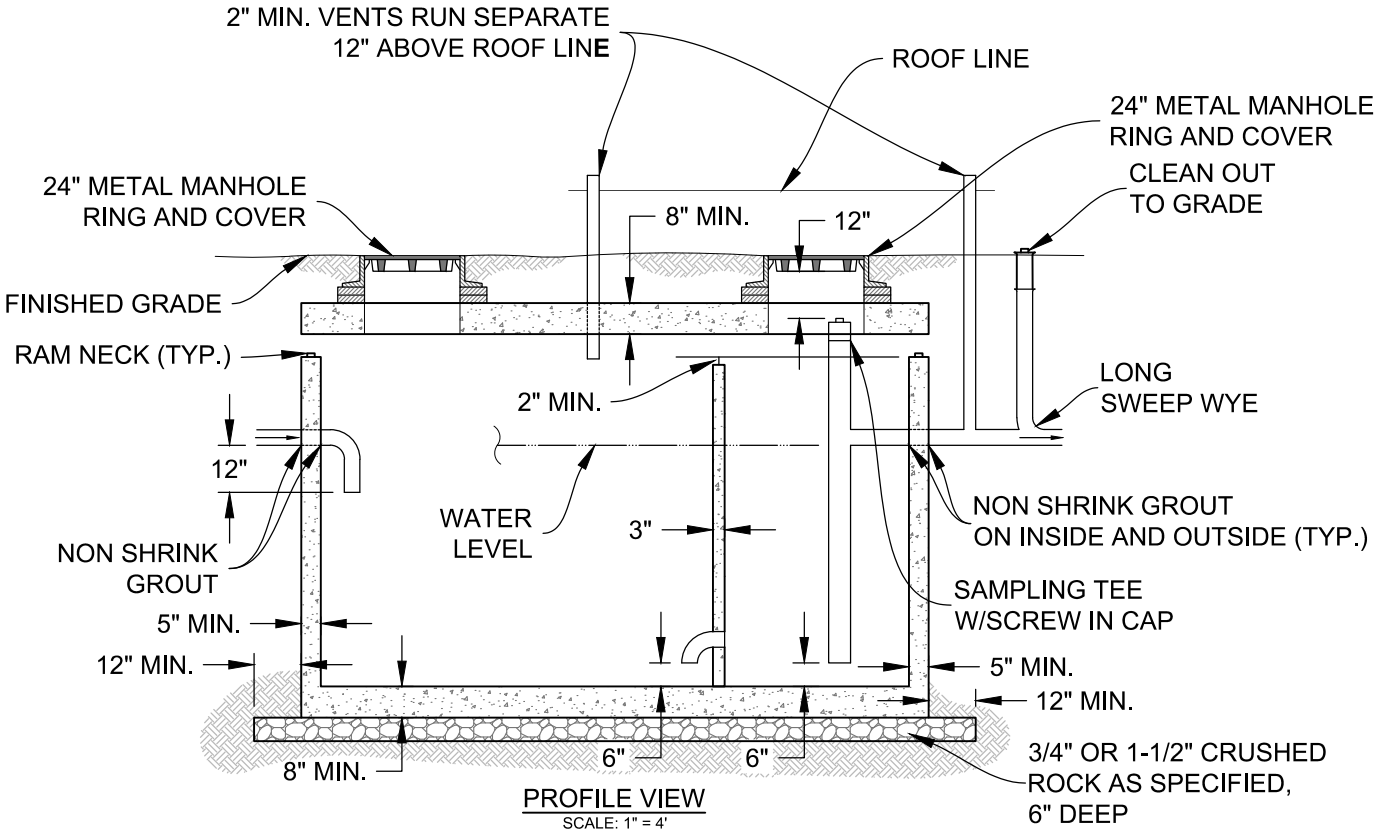

PROFILE VIEW
SCALE: 1" = 4'

GREASE INTERCEPTOR TYPE A - 750 TO 1565 GALLONS

REVISIONS: 04/01/14	SOUTH ADAMS COUNTY WATER AND SANITATION DISTRICT	S-11
	GREASE INTERCEPTOR TYPE A	

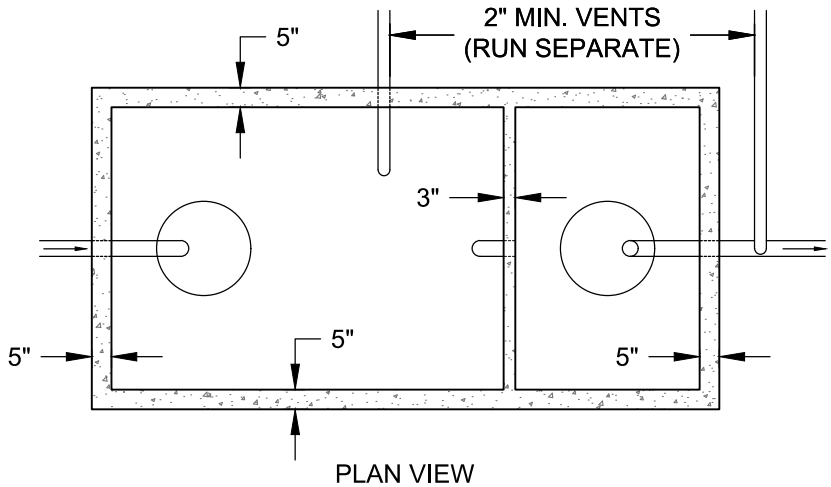

PLAN VIEW
SCALE: 1" = 4'

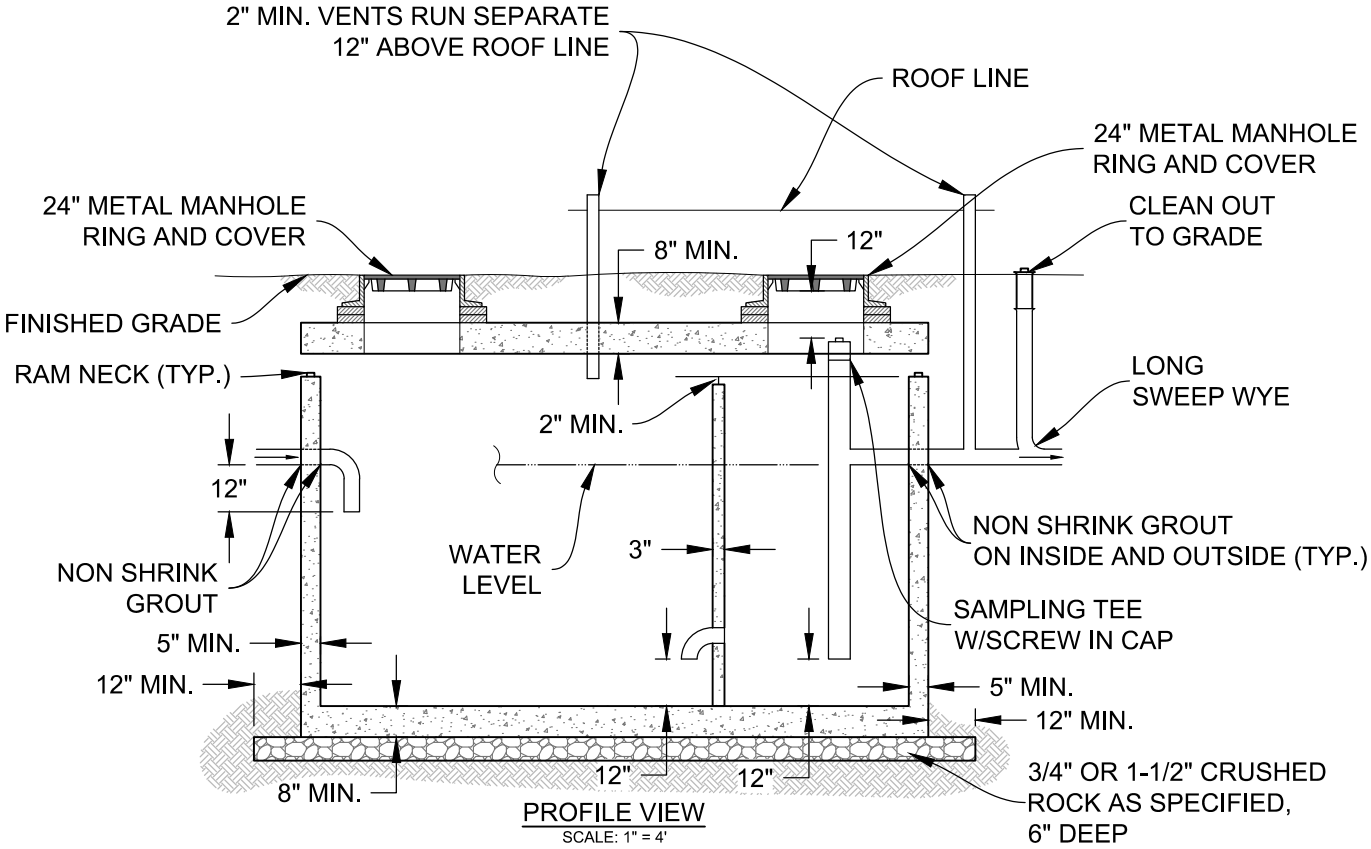

PROFILE VIEW
SCALE: 1" = 4'

GREASE INTERCEPTOR TYPE B - 1566 GALLONS AND ABOVE

REVISIONS: 04/01/14	SOUTH ADAMS COUNTY WATER AND SANITATION DISTRICT	S-12
	GREASE INTERCEPTOR TYPE B	

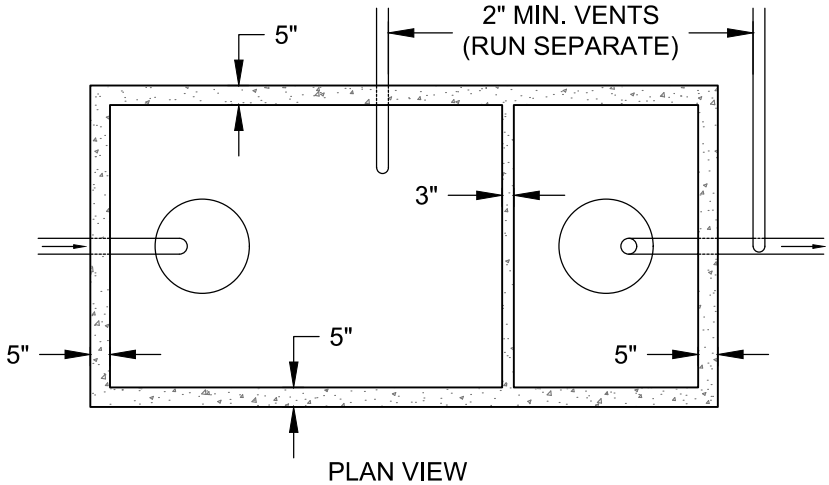

PLAN VIEW
SCALE: 1" = 4'

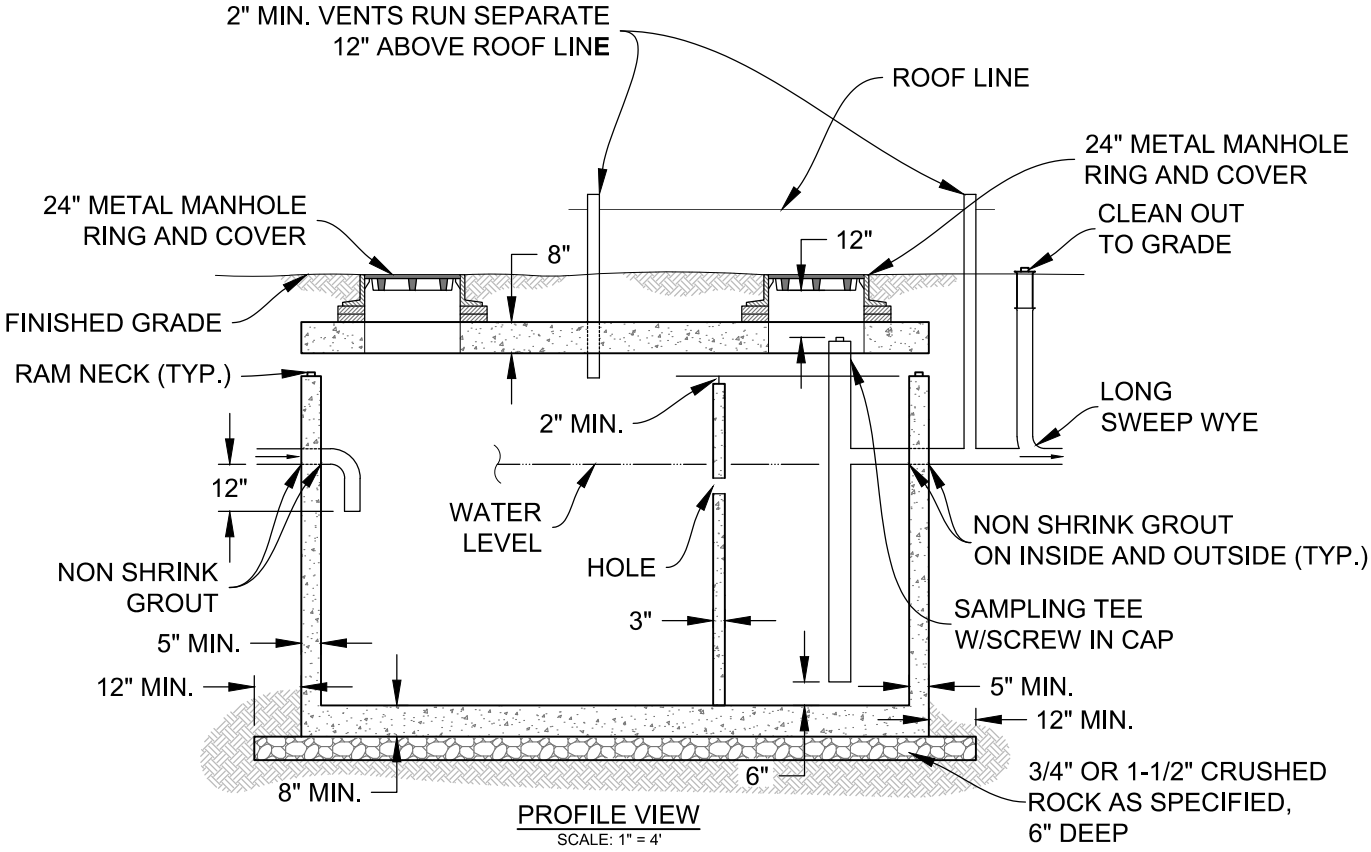

PROFILE VIEW
SCALE: 1" = 4'

SAND / OIL INTERCEPTOR TYPE A - 750 TO 1565 GALLONS

REVISIONS: 04/01/14	SOUTH ADAMS COUNTY WATER AND SANITATION DISTRICT	S-13
	SAND / OIL INTERCEPTOR TYPE A	

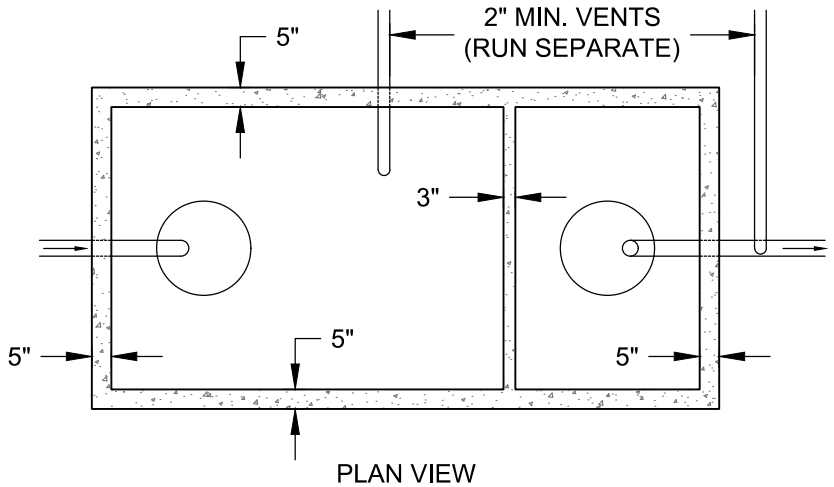

PLAN VIEW
SCALE: 1" = 4'

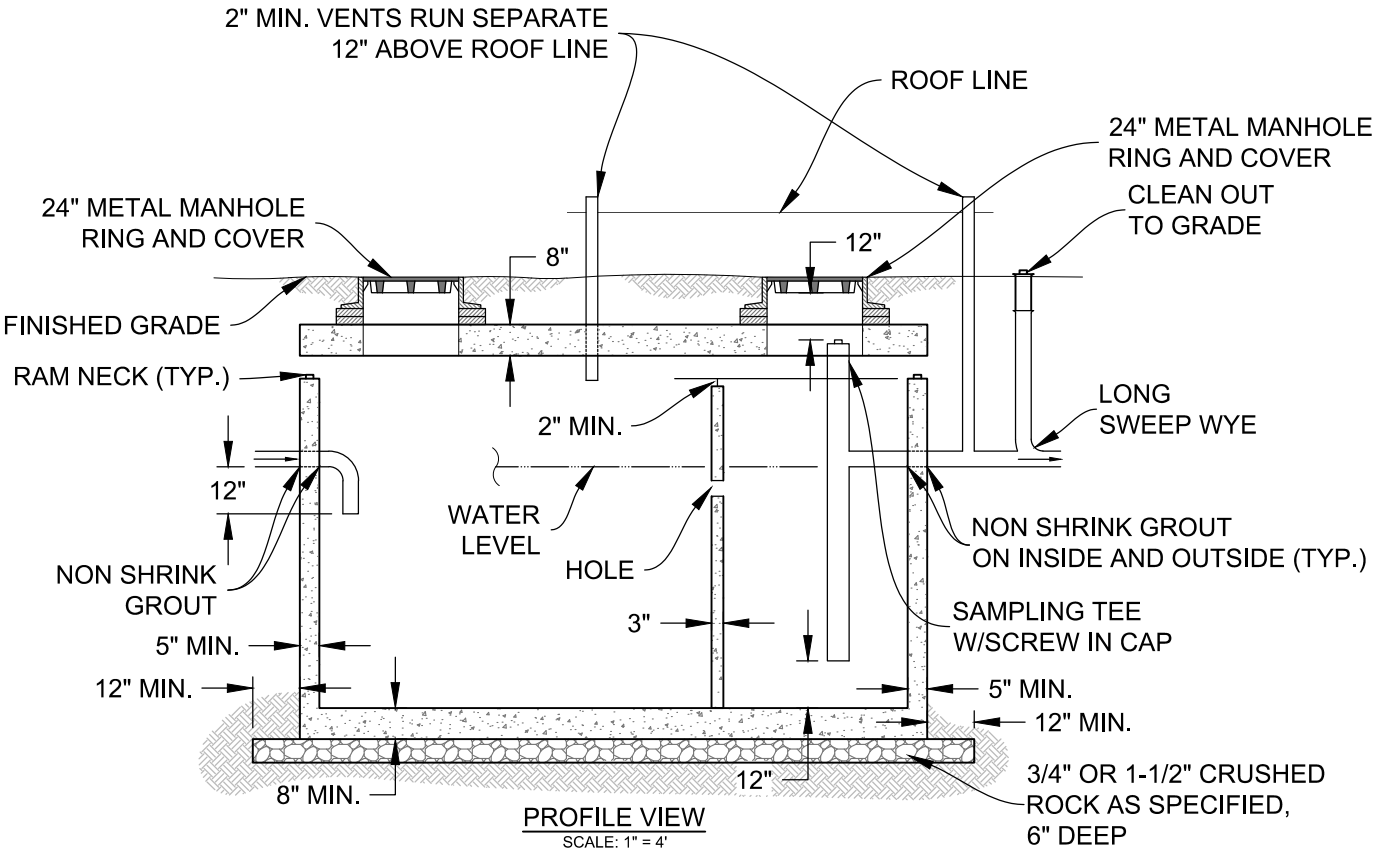

PROFILE VIEW
SCALE: 1" = 4'

SAND / OIL INTERCEPTOR TYPE B - 1566 GALLONS AND ABOVE

REVISIONS: 04/01/14	SOUTH ADAMS COUNTY WATER AND SANITATION DISTRICT	S-14
	SAND / OIL INTERCEPTOR TYPE B	

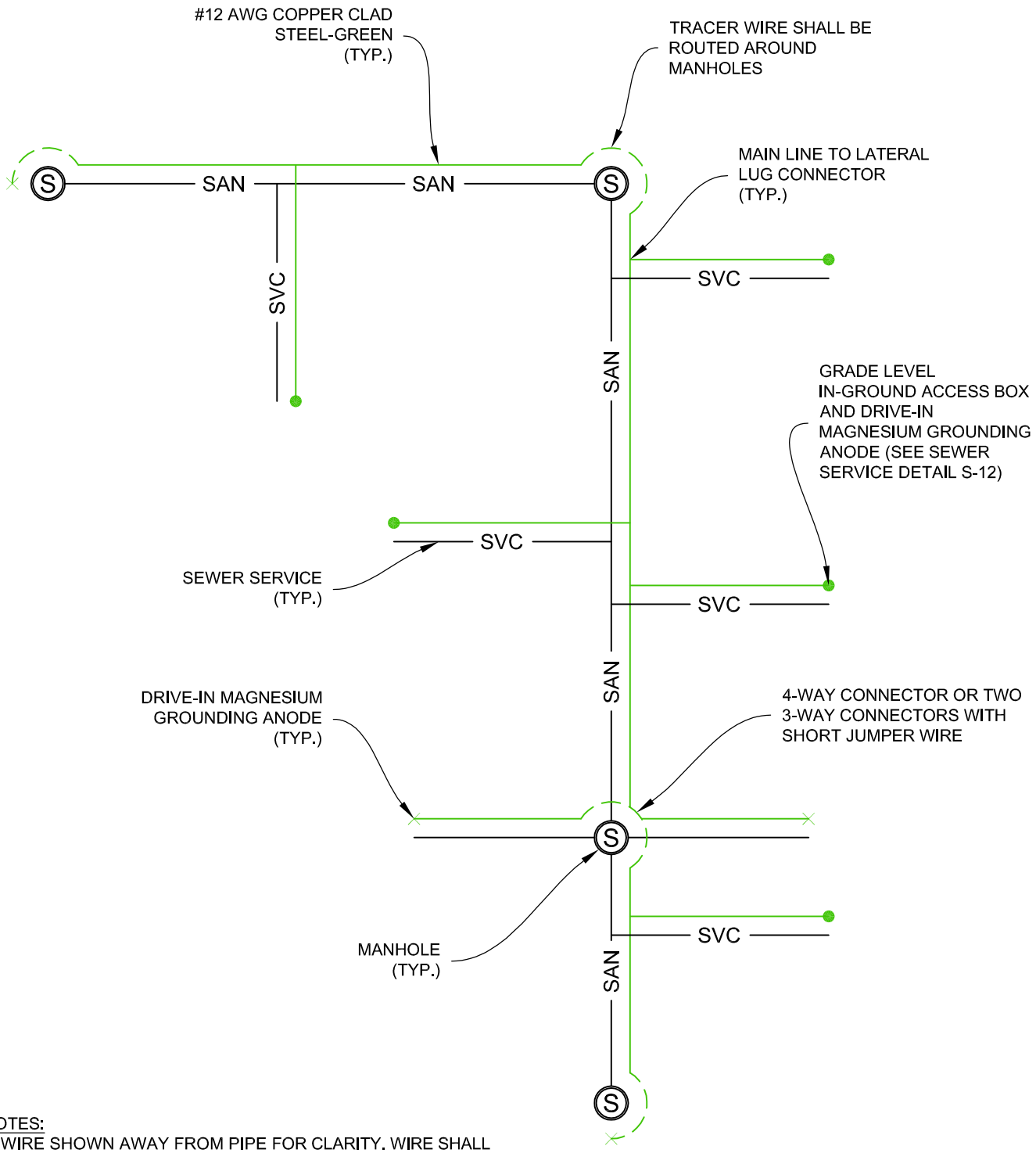

NOTES:
1. WIRE SHOWN AWAY FROM PIPE FOR CLARITY. WIRE SHALL BE INSTALLED ON THE TOP OF THE PIPE. THE WIRE SHALL BE FASTENED TO THE PIPE WITH PVC PIPE TAPE AT 5' INTERVALS.

REVISIONS: 5/28/19	SOUTH ADAMS COUNTY WATER AND SANITATION DISTRICT	S-15
	TRACER WIRE INSTALLATION ON SANITARY SEWER MAIN	

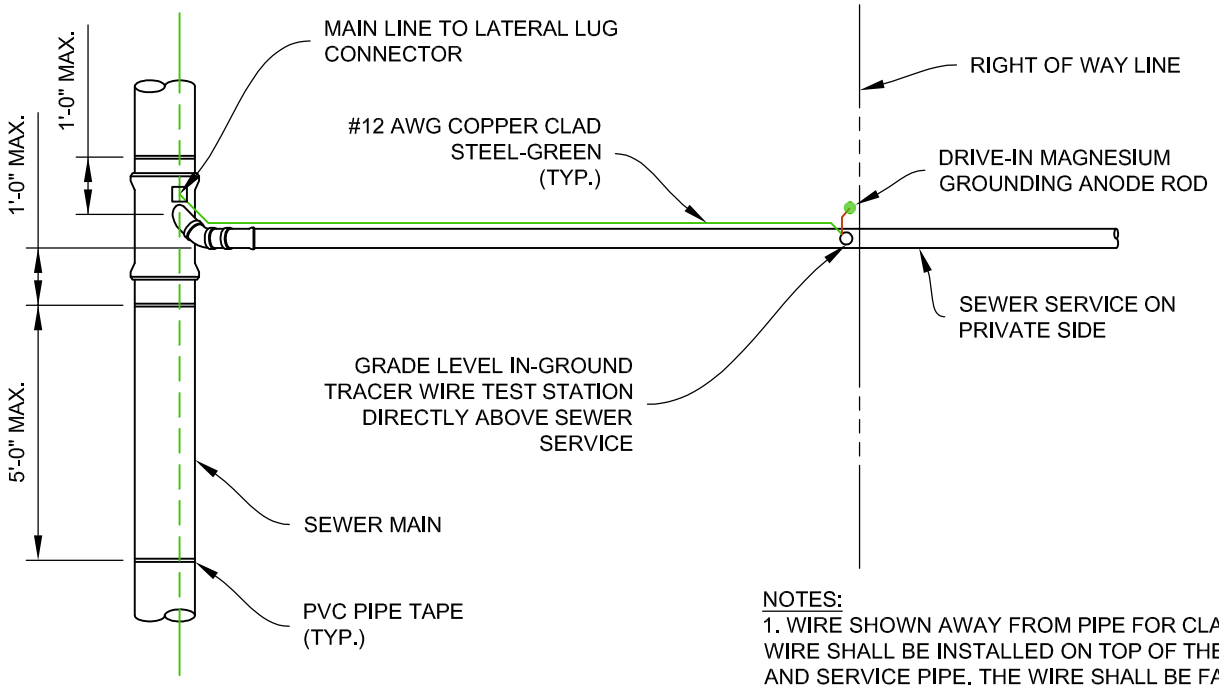

NOTES:
1. WIRE SHOWN AWAY FROM PIPE FOR CLARITY. WIRE SHALL BE INSTALLED ON TOP OF THE MAIN AND SERVICE PIPE. THE WIRE SHALL BE FASTENED TO THE PIPE WITH PVC PIPE TAPE AT 5' INTERVALS.

SEWER SERVICE - PLAN VIEW

N.T.S.

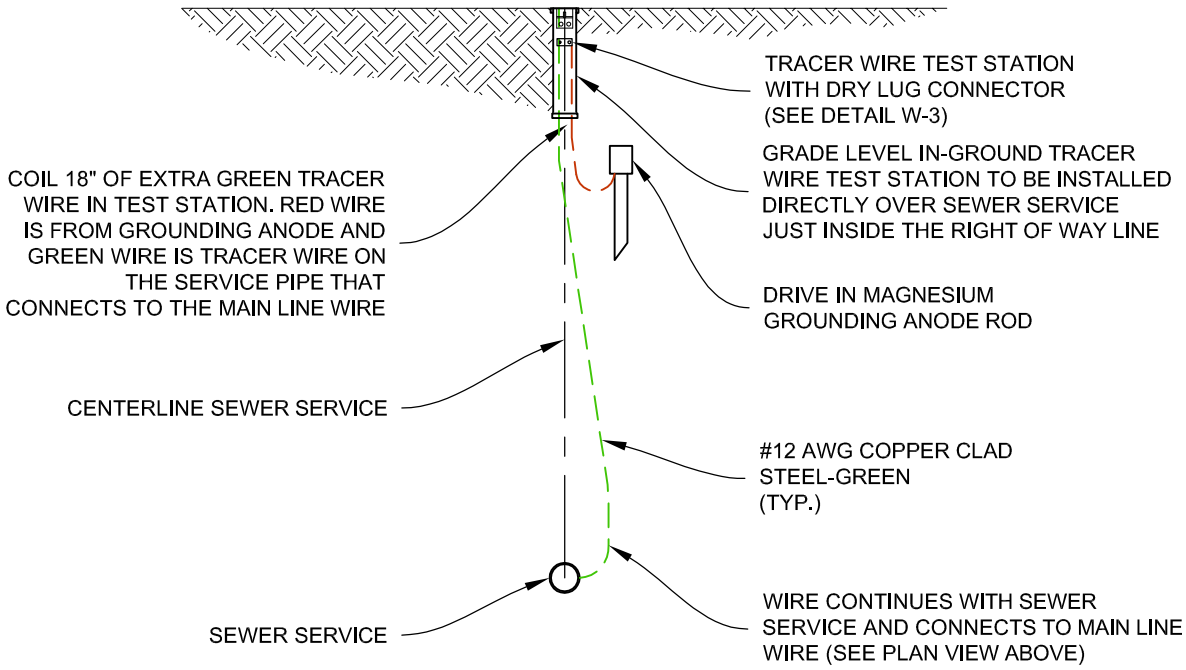

SEWER SERVICE - SECTION VIEW

N.T.S.

REVISIONS: 5/28/19	SOUTH ADAMS COUNTY WATER AND SANITATION DISTRICT	S-16
	TRACER WIRE INSTALLATION ON SANITARY SEWER SERVICE	

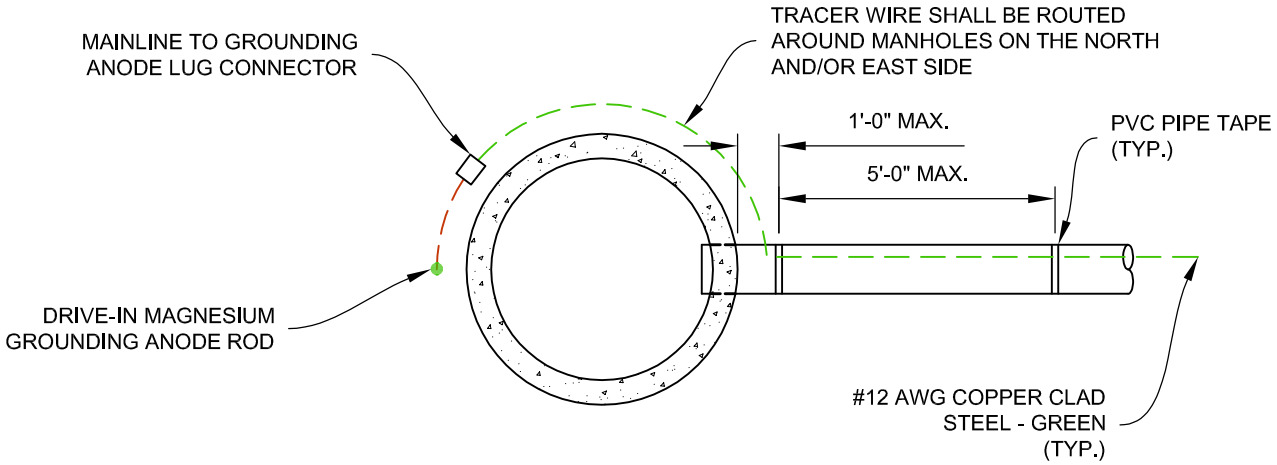

SEWER MANHOLE - PLAN VIEW

N.T.S.

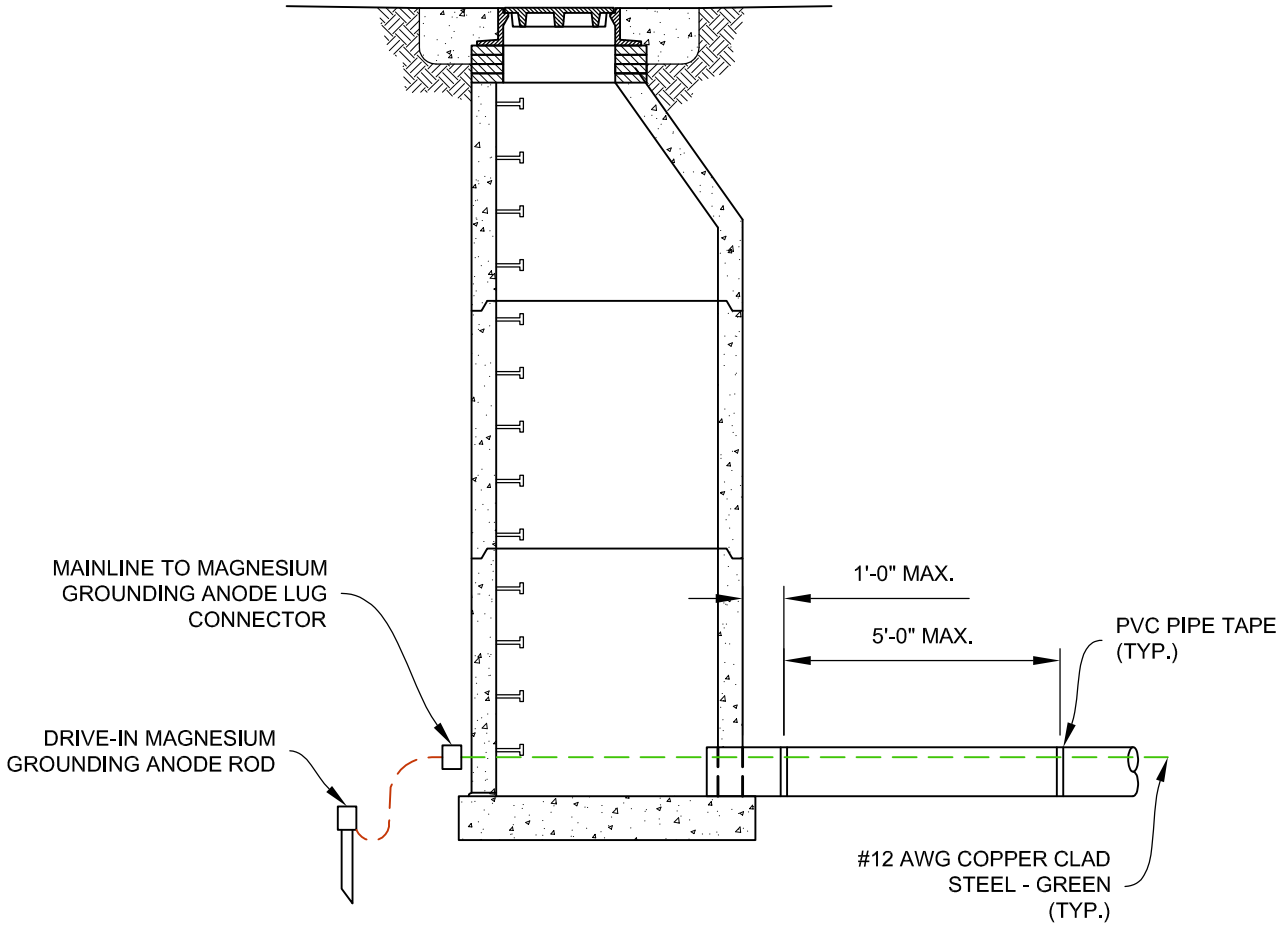

SEWER MANHOLE - SECTION VIEW

N.T.S.

REVISIONS: 5/28/19	SOUTH ADAMS COUNTY WATER AND SANITATION DISTRICT	S-17
	TRACER WIRE INSTALLATION ON SANITARY SEWER AT DEAD-END MANHOLE	

APPENDIX A – CAD/GIS STANDARDS FOR SUBMITTING ELECTRONIC DRAWING FILES (which includes PDF, DWG, and GIS files) FOR APPROVED AS-BUILTS/RECORD DRAWING FOR POTABLE, NON-POTABLE AND SANITARY SEWER.

PRIMARY PURPOSE

Electronic file submittal standards and data standards were developed to facilitate the smooth integration of digital information into the District's Geographic Information System (GIS) databases. South Adams County Water and Sanitation District (SACWSD) has developed CAD/GIS standards for internal and external use. Internally, the CAD/GIS Standards will be used as an in house standard for SACWSD and their consultants. Externally, the CAD/GIS Standards shall be issued to Developers, Engineers and Contractors to develop As-Builds/Record drawings. In both instances, these standards shall be used to ensure uniformity in plan output, allowing the users to follow routine procedures and thereby increase efficiency and approval process. The bullet points below define some of the efficiencies SACWSD wishes to promote:

1. Result in reliable mapping that clearly displays appropriate plans and data which includes (but not limited to) potable, non-potable, and sanitation mains, valves, manholes, parcel boundaries, etc.

2. Reduce the labor and cost of updating District maps with information submitted by Developers, Engineers and Contractors ~~developers~~.

3. Enables the District to establish spatial relationships to parcel addresses, tax identification numbers, and the District's account numbers, to name a few.

COORDINATE SYSTEM

The District's base maps have been registered to the Colorado State Plane, Central Zone coordinate system, North American Datum (NAD) 1983, in feet (WKID 2232). As a matter of data exchange policy, the District requires that all data must be projected as such.

Submittals that do not adhere to these guidelines, or are provided in a relative coordinate system with arbitrary origin and no projection, will not be considered and must be resubmitted.

SURVEYING

All projects require surveying at the cost of the Developer, Engineer or Contractor. Therefore, all infrastructure being installed within the District will be surveyed from inside the trench (while open) for both commercial and

residential development. In addition, surveying for residential development shall be done on services from mains to the back of sidewalk. For commercial development, services shall be surveyed from mains to the building foundations.

An example of points to be surveyed include but are not limited to:
Valves, Tees, Bends, Wyes, Manholes Inverts, Manholes, Services, Ends of Casings/Sleeves, Taps, Meter Pits, Curb Stops, Hydrants, Air/Vacs, Blow offs, Interconnects, Pressure Valves, Sampling Stations as appropriate per system.

Following the above Survey requirements assists in meeting SB 18-167 and ASCE 38 definitions.

DRAWING STANDARDS AND NAMING CONVENTIONS

South Adams County Water and Sanitation District will accept CIVIL 3D® 2015 .DWG file or higher. The .DWG file shall be free from any intelligent (proxy). If the submittal was created using a program other than CIVIL 3D® then the submitting organization is responsible for converting the file to a plain (no proxy) CIVIL 3D® 2015 .dwg file.

The District requests that the maps provided by Developers/Engineers be in CIVIL 3D 15 or higher drawing file format (DWG), and that the information in the drawings be organized according to the standards established in this document. Project name should be attached to any electronic data submitted to the District.

In Civil 3D go to the Map Setup tab, then select Assign. In the search bar you can search using Colorado – The coordinate system we use is NAD 1983 State Plane Colorado Central FIPS 0502 (US Feet) the AutoCAD code is CO83-CF. Commerce City uses a modified projection, **all electronic data must be in SACWSD's projection**. Contact the GIS Department if you would like projected parcel data to help align the project you are working on.

Line work needs to be done as polylines. Having the line work as polyline will eliminate any unnecessary line breaks. The only line breaks should be at tees, crosses, reducers, valves and other fittings of this nature.
Block References & xrefs are not allowed. Different pipe types need to be on their own layer so the various individual layers can be turned off and on. Make sure to use your snapping tool when creating drawings.

When creating projects in CIVIL 3D® it's important to dedicate layers to specific entity types. Create each layer by segregating points, lines and polygons in their own layers. In addition to the symbol entity for hydrants, manholes, valves, and meters a point entity should be created for these features.

Platted property data, street names and edge of pavement lines, water mains and appurtenances, and sewer mains and appurtenances shall be submitted in separate drawing layers in a single DWG file. For example, one DWG that contains potable, non-potable, sanitation sewer parcels, roads (with correct naming) to name a few.

The standard layers and naming conventions that the District has adopted for each drawing file shall be as set forth below.

PARCEL PORTION OF DWG

The PARCELS PORTION OF DWG file shall contain the platted property lines, all dedicated easements, and may contain annotation for the submitted project. The drawing shall be organized with the following layers and each layer shall contain only the data related to its description.

LAYER	ENTITY	DESCRIPTION
ADD	text	Property Addresses
PIN	text	Parcel Identification Number (if available) and lot number
STNAME	text	Street Name Labels (placed in center of right-of-way)
PL	polygon	Property Polygons

EASEMNTS	polygon	Utility Easement Polygons
TOWN	polyline	Public Land Survey Township and Range Lines
SECT	polyline	Public Land Survey Section Lines
QTR	polyline	Public Land Survey Quarter Section Lines

SANITATION

SEWER PORTION OF DWG

The SEWER PORTION OF DWG file shall overlay on the PARCELS.DWG. This file shall contain the wastewater collection system for the submitted project. The drawing shall be organized with the following layers and each layer shall contain only the data related to its description.

LAYER	ENTITY	DESCRIPTION
MH_TXT	text	Manhole Information
SAN_TXT	text	Sewer System Information
SNOTES	text	Detail Notes and Call-Outs
MH	symbol and point	Manholes
FORCE_MAIN	polyline	Force Main Facilities
LIFT_STATION	symbol	Lift Stations
SCASING	polyline	Sewer Casing Pipes
SSERVICE	polyline	Sewer Service Lines

FLOW	symbol	Directional Flow Arrows
SDIA6	polyline	6-inch Sewer Main
SDIA8	polyline	8-inch Sewer Main
SDIA10	polyline	10-inch Sewer Main
SDIA12	polyline	12-inch Sewer Main
SDIA15	polyline	15-inch Sewer Main
SDIA18	polyline	18-inch Sewer Main
SDIA21	polyline	21-inch Sewer Main
SDIA24	polyline	24-inch Sewer Main
SDIA30	polyline	30-inch Sewer Main

POTABLE WATER PORTION OF DWG

The POTABLE WATER PORTION OF DWG file shall overlay on the PARCELS.DWG. This file shall contain the potable water distribution system for the submitted project. The drawing shall be organized with the following layers and each layer shall contain only the data related to its description.

LAYER	ENTITY	DESCRIPTION
WAT_TXT	text	Water System Information
WWELL_TXT	text	Latitude and Longitude and Other Potable System Well Text
WNOTES	text	Detail Notes and Call-Outs
WVALV	symbol and point	Main Valves, Air Relief Valves, Pressure Regulating Valves

WFITTINGS	symbol	Miscellaneous Fittings
HYD	symbol and point	Hydrants
WWELLS	symbol	Potable Well Sites
WCASING	polyline	Potable Water Casing Pipes
WSERVICE	polyline	Potable Water Service Lines
WMETER	symbol and point	Potable Water Meter Pit
WDIA4	polyline	4-inch Potable Water Main
WDIA6	polyline	6-inch Potable Water Main
WDIA8	polyline	8-inch Potable Water Main
WDIA12	polyline	12-inch Potable Water Main
WDIA16	polyline	16-inch Potable Water Main
WDIA20	polyline	20-inch Potable Water Main
WDIA24	polyline	24-inch Potable Water Main

NON-POTABLE WATER PORTION OF DWG

The IRRIGATION WATER PORTION OF DWG file shall overlay on the PARCELS.DWG. This file shall contain the irrigation water distribution system for the submitted project. The drawing shall be organized with the following layers and each layer shall contain only the data related to its description.

LAYER	ENTITY	DESCRIPTION
IWAT_TEXT	text	Irrigation System Information
IWELL_TEXT	text	Latitude and Longitude and Other Irrigation System Well Text

INOTES	text	Detail Notes and Call-Outs
IVALV	symbol and point	Irrigation Main Valves, Air Relief Valves, Pressure Regulating Valves
IFITTINGS	symbol	Miscellaneous Irrigation Fittings
IHYD	symbol and point	Flushing Hydrant
IBO	symbol and point	Irrigation Blow-Off
IWELLS	symbol	Irrigation Well Sites
ICASING	polyline	Irrigation Water Casing Pipes
ISERVICE	polyline	Irrigation Water Service Lines
IMETER	symbol	Irrigation Water Meter Pit
IDIA4	polyline	4-inch Irrigation Main
IDIA6	polyline	6-inch Irrigation Main
IDIA8	polyline	8-inch Irrigation Main
IDIA12	polyline	12-inch Irrigation Main
IDIA16	polyline	16-inch Irrigation Main

RECORD/AS-BUILTS REQUIREMENTS

Record drawings shall show all changes from the approved construction drawings. These Record Drawings shall be submitted to the District prior to the initiation of the required warranty period of two years as defined in SACWSD's "Grant of Acceptance of Utilities Agreement".

Survey points will be used to create the Record Drawings. Record Drawings will reflect how the infrastructure was actually installed. Add Red lines to Record Drawings as necessary. In addition, a copy of the marked up Construction Drawing with Red Lines will be submitted in PDF form to the District.

<u>SACWSD accepts Quality Level B or higher Record Drawings.</u>
Record Drawings must be approved before an initial walk and or TCO / CO can be given.

All lengths, sizes, and materials of installed pipe, fittings, manholes, and any other improvement shall be included..

Horizontal locations either by Station and Offset, or by Northing and Easting Coordinates of all manholes, bends, cleanouts, valves, taps, wyes, stubs, plugs, tees, etc.

Invert elevations of all sanitary manholes, inlets, outlets, stub ends, bottom of pipe, finished rim elevation, and bottom of pipe elevations of each utility crossing, etc.

The constructed slope of sanitary sewer pipes between manholes and structures. Top of pipe elevations at regular intervals and/or fittings for water lines.

Any other variations from the construction documents must be clearly noted and detailed on the plans.

The As-Built drawings shall be provided and stamped/signed and dated by a Colorado registered Professional Land Surveyor.

Electronic AutoCAD drawing files as outlined in the Districts Standards and Specifications are to be submitted, along with a PDF, and a hardcopy set.

Submittals will separate systems within PDFs. For example, Non-potable and Potable systems will not be on the same page of submitted PDF.

DOCUMENTATION

All of the above-mentioned data should be submitted on acceptable media, which include email or thumbdrive (Microsoft Windows Format). All media should be labeled with a document that explains the electronic data as follows:

Date:	(Date media was created)
Project:	(Title of Project)
CIVIL 3D Version	(CIVIL 3D Version)
Company:	(Name of Company submitting)
Contact:	(Name and Phone number of person to contact)
Submittal #	(Submittal number)

APPENDIX B – STANDARD CONSTRUCTION DRAWING NOTES

- **A cover sheet approval block bearing the signature of an authorized District representative that states the following:**

These plans have been reviewed and found to be in general compliance with the South Adams County Water and Sanitation District's Design and Construction Standards. Information contained on these plans in no way relieves any individual or agency from constructing the facilities shown herein in complete conformance with all District requirements:

_____
Signature of South Adams County Water and Sanitation District Representative

_____
Date

- **A cover sheet approval block (potable plans only) bearing the signature of the appropriate fire authority that states the following:**

All fire hydrants shall be installed according to the South Adams County Water and Sanitation District's Design and Construction Standards. The number and locations of fire hydrants of existing and proposed fire hydrants as shown on these plans are correct as reviewed by the South Adams County [or Brighton] Fire Protection District. The required fire flow is _____ GPM based on the highest hazard structure anticipated within the development.

_____
Signature of Fire Marshal or Designated Representative

_____
Date

- **SACWSD "General Notes" (Appendix B, pages B-2 through B-4).**

- **SACWSD "Notes" corresponding to the specific system design represented in the plan set (Appendix B, page B-5 through B-8).**

- **Vicinity Map**

- **An overall plan depicting the entire project. A key map on each sheet showing where that particular sheet fits into the overall plan shall be included with multiple overall plans as necessary.**

- **Plan and profile sheets (preferred scale: 1"=50' horizontal, 1"=5' vertical) showing all surface and underground features along the pipeline**

route, and all information necessary for construction (pipe size, material, centerline locations, manhole locations, rim and invert elevations, pipe depths, grades and slopes, relationship to other existing and proposed utilities including clearance data at crossings, special construction requirements, survey data, and other information as required). Each sanitary sewer, potable water and irrigation water main shall be profiled regardless of size such that the plan section and corresponding profile are shown on the same sheet.

- **Tap locations and sizes for all service lines to be installed in conjunction with the proposed distribution and wastewater collection systems.**

- **Details and specifications of non-standard construction items not explicitly covered by the District's Design and Construction Standards.**

Upon approval of the final design submittal (Section 1.4.2) and all applicable service tap submittals (Section 1.4.3), the following items, and any others deemed necessary by the District, shall be submitted to the District's Development Review Team prior to the pre-construction meeting for each of the utilities to be constructed:

1. Six copies of the approved design reports if not already submitted. Five copies will be retained by the District and one copy returned to the Developer at the pre-construction meeting. Any additional copies required by the Developer shall also be submitted for signing and stamping by the District. The report shall bear the seal and signature of a Professional Engineer registered in the State of Colorado.

2. A minimum of four 24x36 copies of the approved plan sets for signing and stamping by the District. Two copies will be retained by the District and one copy returned to the Developer at the pre-construction meeting. Any additional copies required by the Developer and Contractor for use during construction shall also be submitted for signing and stamping by the District. Plans shall bear the seal and signature of a Professional Engineer registered in the State of Colorado on each sheet. Only those plan sets bearing official District approval shall be utilized in constructing the facilities.

3. One scalable half-size copy of the approved plan sets, 11" high by 17" wide. Only those plans bearing official District approval shall be utilized in constructing the facilities.

4. A PDF of the approved plan sets. Any aspect of the electronic drawing files found not to conform with the District's mapping standards

(Appendix A) will require that the files be resubmitted, delaying the scheduling of the pre-construction meeting.

5. Signed easement agreements for execution by the District.

SACWSD Standard Construction Drawing Notes

General Notes:

1. No work shall begin on any water or wastewater construction project until the construction plans, specifications, and electronic drawing files have been approved by the District, and all required easements have been conveyed to the District. The Contractor shall schedule a pre-construction meeting with the District prior to the start of any construction.

2. All materials and construction related to water and wastewater facilities shall be in accordance with the District's Rules and Regulations and Design and Construction Standards. The District's Standard Details are included in Section 6 of the Design and Construction Standards as a means of providing specific, supplemental information pertaining to the construction of facilities to be owned by the District, and shall in all aspects be complied with by the Contractor regardless of whether or not such applicable details have been included on the plans.

3. The Contractor shall have in its possession at all times the District's Design and Construction Standards, one set of approved construction plans and specifications, and all approved easement agreements. Approved water plans shall bear the signature of the appropriate fire authority.

4. The Contractor shall coordinate all construction activities with any affected utility company and shall notify the Utility Notification Center of Colorado at 1-800-922-1987 or 811 two days prior to construction.

5. The Contractor shall be responsible for contacting the District regarding all required tests and inspections, and shall be responsible for the coordination and scheduling thereof.

6. The Contractor shall notify the District in writing, where practical, at least 48 hours prior to the start of construction and for any emergencies at (303) 288-2646. The appropriate fire department shall be notified at least 48 hours in advance of any street closures and at times when fire hydrants are to be temporarily out from service. The Contractor shall also be responsible for providing at least 48 hours advanced notice of any need to shut down any portion of the existing water system and for observations and/or inspections required by the District.

7. The Contractor shall notify the District of any problem impacting or conflicting with water and wastewater facilities that would potentially require a variance from the approved plans and specifications. Any variance and/or change order from the approved documents shall be at the sole discretion of the District. The Contractor shall be responsible for recording all field changes to the approved documents and the conveying of this information to the Design Engineer for the purposes of preparing Record Documents as required by the District. Probationary acceptance of the work shall be contingent upon the District's receipt of the Record Documents, which shall include both "as-constructed" plans and electronic drawing files.

8. The Contractor shall be responsible for field verifying the location of (potholing), and protecting all existing utilities, including those not shown, or incorrectly shown on the plans. Any damage to existing utilities shall be repaired to the satisfaction of the District and the Owner of the impacted utility. Vertical clearances and utility protection between crossing District facilities shall be maintained in strict conformance with the District's Design and Construction Standards and the District's Standard Details.

9. Existing potable and irrigation water valves within the District shall be operated by District personnel unless otherwise allowed by the District.

10. The Contractor shall be responsible for removing any groundwater encountered during the construction of any portion of the work. Groundwater shall be pumped, piped, removed, and disposed of in a manner that does not cause flooding of existing streets or erosion on abutting properties in order to construct the improvements shown on the plans. A dewatering permit from CDPHE may be required prior to pumping activities. No concrete shall be placed where groundwater is visible until the groundwater table has been lowered below the proposed improvements.

11. The District and its Engineer(s) are not guarantors of the Contractor’s obligations and performance of the contract. The Contractor shall defend, indemnify, and hold harmless the District and its Engineer(s) from any and all liability, real or alleged, in connection with the work performed, excepting for liability arising from the sole negligence of the District or its Engineer(s).

12. Construction water is available to the Contractor in the manner established in the District’s Design and Construction Standards. It shall be the responsibility of the Contractor to contact the District regarding current regulations and required agreements related to the provision of construction water.

13. Limits of construction easements and rights-of-way shall be delineated with temporary staking by the Contractor. Safety fencing shall be utilized where work is in close proximity to residences, trails, or other public areas.

14. The Contractor shall be responsible for all traffic control as required for construction activities. Traffic control plans shall be submitted to and approved by governing authority such as CDOT, Adams County, and/or Commerce City.

15. Where excavation is required under existing asphalt or concrete pavement, the existing pavement shall be saw cut in a manner to affect a smooth, straight-cut edge.

16. Record drawings showing all changes from the approved construction drawings shall be submitted to the District prior to the initiation of the required warranty period of two years as defined in SACWSD's "Grant Of Acceptance Of Utilities Agreement". The record drawings will consist of a marked-up set of "Issued For Construction" drawings verifying the following:

    - All lengths, sizes, and materials of installed pipe, fittings, manholes, and any other improvement.
    - Horizontal locations either by Station and Offset, or by Northing and Easting Coordinates of all manholes, bends, cleanouts, valves, taps, wyes, stubs, plugs, tees, etc.
    - Invert elevations of all sanitary manholes, inlets, outlets, stub ends, top of pipe, finished rim elevation, and bottom of pipe elevations of each utility crossing, etc.
    - The constructed slope of sanitary sewer pipes between manholes and structures.
    - Top of pipe elevations at regular intervals and/or fittings for water lines.
    - Any other variations from the construction documents must be clearly noted and detailed on the plans.
    - The As-Built drawings are to be provided and stamped/signed and dated by a Colorado registered Professional Land Surveyor.
    - Electronic Autocad drawing files as outlined in the Districts Standards and Specifications are to be submitted, along with a PDF, and a hardcopy set.

Potable Water Distribution System Notes:

1. Tracer wire shall be installed on all potable water mains and service lines, regardless of pipe material, as specified in the District's Design and Construction Standards. All splices shall be made using Dryconn direct bury wire lugs. Under the supervision of the District, tests shall be made by the Contractor at the completion of construction to ensure that the wires carry a continuous current between test boxes.

2. There shall be a minimum cover of 4.5 feet over all potable water mains and service lines.

3. All potable water mains shall be chlorinated per the District's Design and Construction Standards in accordance with AWWA C651, "Disinfecting Water Mains." When tablets are used, a sufficient number of tablets shall be adhered to the top of each pipe to produce a minimum concentration of 100 milligrams per liter. The chlorination of any finished pipeline where the tablet method was used shall be tested and accepted by the District prior to hydrostatic testing of the line.

4. All potable water mains shall be hydrostatically tested per the District's Design and Construction Standards at a test pressure of 150 psi unless otherwise directed by the District. Tests shall be made under the supervision of the District.

5. All potable water ductile iron pipe and fittings shall be encased in clear polyethylene wrap per the District's Design and Construction Standards.

6. All potable system valve box lids, meter pit covers, manhole covers and vault covers shall be furnished with the word "WATER" clearly cast on the surface. Potable water main valve box lids shall be circular, and potable meter pit covers shall be recessed covers to distinguish them from the cap-type covers used on irrigation water meter pits.

7. A minimum horizontal distance of 10 feet measured edge of pipe to edge of pipe shall be maintained between potable water mains and all other sanitary sewers, storm sewers, and irrigation water mains. A 10-foot horizontal separation shall also be provided between potable water service lines and all other service lines.

8. A minimum distance of 7 feet to pipe centerline shall be maintained between potable water mains and gutter flowlines where possible.

9. All potable water valves installed in the District shall open left (counter-clockwise). Valves 10-inch and smaller shall be resilient seat gate valves. Larger valves may be resilient seat gate valves or butterfly valves.

10. Only one connection to the existing potable water distribution system shall be made until all hydrostatic testing, flushing, and chlorination has been completed in accordance with the District's Design and Construction Standards.

Irrigation Water Distribution System Notes:

1. Tracer wire shall be installed on all irrigation water mains and service lines, regardless of pipe material, as specified in the District's Design and Construction Standards. All splices shall be made using Dryconn direct bury wire lugs. Under the supervision of the District, tests shall be made by the Contractor at the completion of construction to ensure that the wires carry a continuous current between test boxes.

2. There shall be a minimum cover of 5.5 feet over all irrigation water mains and a minimum cover of 4.5 feet over all irrigation water service lines.

3. All irrigation water mains shall be chlorinated per the District's Design and Construction Standards in accordance with AWWA C651, "Disinfecting Water Mains." When tablets are used, a sufficient number of tablets shall be adhered to the top of each pipe to produce a minimum concentration of 100 milligrams per liter. The chlorination of any finished pipeline where the tablet method was used shall be tested and accepted by the District prior to hydrostatic testing of the line.

4. All irrigation water mains shall be hydrostatically tested per the District's Design and Construction Standards at a test pressure of 150 psi unless otherwise directed by the District. Tests shall be made under the supervision of the District.

5. All irrigation water ductile iron pipe and fittings shall be encased in purple polyethylene or V-Bio wrap and affixed with purple warning tape applied continuously along the top of the pipe per the District's Design and Construction Standards.

6. All irrigation water PVC pipe shall be manufactured in a purple color and shall be embossed or integrally stamped with a statement that clearly indicates that the pipe does not contain potable water.

7. All irrigation system valve box lids, meter pit covers, manhole covers and vault covers shall be furnished with the word "IRRIGATION," or an acceptable abbreviation, clearly cast on the surface. Irrigation water main valve box lids shall be triangular, and irrigation meter pit covers shall be cap-type covers to distinguish them from the recessed covers used on potable water meter pits.

8. A minimum horizontal distance of 10 feet measured edge to edge shall be maintained between irrigation water mains and potable water mains, and between irrigation service lines and potable water service lines. A centerline-to-centerline horizontal distance of 5 feet shall be maintained between irrigation water mains and sanitary sewer mains, and between irrigation service lines and sanitary sewer service lines. Horizontal separation between irrigation water mains and storm sewers shall be 5 feet centerline to centerline.

9. A minimum distance of 7 feet to pipe centerline shall be maintained between irrigation water mains and gutter flowlines where possible.

10. All irrigation water valves installed in the District shall open left (counter-clockwise). Valves 10-inch and smaller shall be resilient seat gate valves. Larger valves may be resilient seat gate valves or butterfly valves.

Sanitary Sewer System Notes:

1. Tracer wire shall be installed on all sanitary sewer mains and service lines, regardless of pipe material, as specified in the District's Design and Construction Standards.

2. There shall be a minimum cover of 4.0 feet over all sanitary sewer mains and service lines.

3. Sewer service lines shall be located at the center of each lot between the property lot lines on the lot side fronting the sewer main. Sewer services may be constructed underneath driveways.

4. All sanitary sewer mains shall be low-pressure air tested per the District's Design and Construction Standards. Sewer mains shall also be checked for deflection by pulling a standard 9 fin mandrel through the pipe.

5. The Contractor shall videotape the sewer facilities with close circuit television (CCTV) as part of final inspection and shall submit a DVD copy of the inspection to the District. The distance of all service line connections to the sewer main from the nearest upstream manhole shall be recorded and indicated on the DVD. In addition to the video an electronic report stating any deficiencies shall be submitted with the video.

6. All sanitary sewer manholes shall be vacuum tested per the District's Design and Construction Standards. All testing shall be performed under the supervision of the District.

7. All sanitary sewer manhole covers shall be furnished with the word "SEWER" clearly cast on the surface of the cover.

8. The location of all sanitary sewer manholes not located in paved road surfaces shall be identified with a carsonite or steel marker post, as directed by the District. The exact location of the marker post shall be adjacent to the manhole over the sewer main alignment unless otherwise determined in the field by the District.

9. A minimum horizontal separation distance of 10 feet measured edge to edge shall be maintained between potable water mains and sanitary sewer mains. A minimum centerline-to-centerline horizontal separation distance of 5 feet shall be maintained between irrigation water mains and sanitary sewer mains.

10. Location and elevation of existing sanitary sewer mains at proposed points of connection shall be field verified prior to the installation of any new sanitary sewer mains.

11. Manhole rims shall be set to an elevation 1/4-inch below the final pavement elevation. Concrete adjustment collars shall be used to adjust rim elevations to rough final grade. No more than one cast iron traffic adjustment ring (riser) may be used to adjust the manhole rim to its final elevation.

12. The minimum pipe diameter of sanitary sewer service lines shall be 4-inch.

13. The minimum pipe diameter of sanitary sewer mains shall be 8-inch.

14. All sanitary sewer mains shall be installed in a straight alignment between manholes. Changes in pipeline direction shall occur only at manholes.

15. The Contractor shall measure and record on the as-built drawings, all sanitary sewer service line connection locations by referencing the distances to upstream and downstream sanitary sewer manholes on the main.

16. Interior surfaces of manholes shall be coated with a corrosion protection system that is Sikagard “62” or approved equal.

17. Before backfilling is started, There shall be a full bitumastic joint between all adjoining concrete riser and cone sections with two rows of flexible bitumastic material. All manhole barrel sections shall be joined by a minimum of 8 inches wide of flexible mastic gasket material (i.e. Conwrap) to minimize or eliminate inflow and infiltration into to the sanitary sewer system.

APPENDIX C – EXAMPLE OF DISTRICT "EASEMENT AND RIGHT-OF-WAY AGREEMENT"

(Obtain official version directly from District)

EASEMENT AGREEMENT
(GRANT OF EASEMENT TO SOUTH ADAMS COUNTY WATER AND SANITATION DISTRICT)

THIS EASEMENT AGREEMENT ("Agreement") is made and entered into this _____ day of _____, 20_____, by and between _____ ("Grantor") and the **South Adams County Water and Sanitation District** (the "District"), a special district and a quasi-municipal corporation of the State of Colorado, acting through its South Adams County Water and Sanitation District Activity Enterprise whose address is 6595 East 70th Avenue, Commerce City, Colorado 80037 ("District" or "Grantee").

WITNESSETH:

For good and valuable consideration, the receipt of which is hereby acknowledged, Grantor hereby grants, bargains, sells and conveys to the District, its successors and assigns, an easement (the "Easement") for the non-exclusive and perpetual right to enter, re-enter, occupy and use the hereinafter described property to install, construct, maintain, repair, replace, remove, enlarge, operate and/or inspect one or more sanitary sewer or water pipelines and all underground and surface facilities related thereto, including, but not limited to, the following: electric or other control systems, underground cables, wires, connections, mains and conduits, valves, vaults, manholes, pumps and pump stations, lift stations, wells, well housings, ventilators, transformers, lights and the like (collectively the "District Facilities") in, through, over and across the following described parcel of land situate, lying and being in the County of Adams and State of Colorado, to wit:

> The property described in **Exhibit A** (the "Easement Property"), attached hereto and made a part hereof as if fully set forth herein.

NOW, THEREFORE, it is hereby mutually covenanted and agreed by and between the parties hereto as follows:

1. Grantor shall not stop, limit, hinder or impede the construction, operation, use and maintenance of the District Facilities, within the Easement Property.

2. The District shall have and exercise the right of ingress and egress in, to, over, through and across the Easement Property and any other adjoining premises of the Grantor for the full use of the Easement provided for herein.

3. The District shall have the right to cut, trim, control, and remove trees, brush and other obstructions located within the Easement or upon Grantor's adjacent property which injure or interfere with the District's use, occupation, or enjoyment of the Easement or the construction, operation, maintenance, repair, replacement, removal, enlargement, or

inspection of the District Facilities, without liability for damages arising therefrom.

4. Grantor shall not construct any permanent building or similar structure on the Easement Property. If any such items are placed on the Easement Property, the District may remove the items without liability for damages arising therefrom and bill Grantor for its actual costs for the removal. The District shall not be responsible to replace such items after it has exercised its rights under this Agreement. The Grantor shall pay the costs of removal within thirty (30) days of receiving a bill from the District.

5. Grantor may install temporary or removable and replaceable objects such as yard lights, mail boxes, signs, fences, and shrubs, flowers, or plants without deep root systems, on the Easement Property. If, in the process of exercising one or more of the rights described in this Agreement, the District finds it necessary to remove any of the previously described permitted items which have been placed or planted on the Easement Property by Grantor, the District shall do so at its own cost, and the District shall not be responsible to replace such items after it has exercised its rights under this Agreement.

6. In no event shall Grantor:

(a) Construct or place, longitudinally along or otherwise within the Easement Property, any tree, underground pipeline, cable, wire, conduit, valve, stub, or other utility or appurtenance without the prior written consent of the District; or

(b) Change, by excavation or filling, the present grade or ground level of the Easement Property by more than one (1) foot without the prior written consent of the District.

7. The District shall have the right, upon reasonable notice to Grantor, to use so much of the adjoining premises of the Grantor during surveying, construction, reconstruction, use, maintenance, repair, replacement and/or removal of the District Facilities as may be reasonably required; provided, however, that such activities shall not interfere unreasonably with Grantor's use and enjoyment of such adjoining premises.

8. The District shall have and exercise the right of subjacent and lateral support for the full and complete use of the Easement. The Grantor shall take no action which would impair the earth cover over, or the lateral or subjacent support for, any of the District Facilities within the Easement Property; provided, however, that upon obtaining the specific written permission of the District, the earth cover over any pipeline or lines may be modified; except that permission normally will not be granted for modification resulting in cover of less than four and one half (4.5) feet, nor greater than ten (10) feet measured

vertically from the top of any pipelines or other subsurface District Facilities.

9. After construction, repair, replacement or enlargement of any pipelines or District Facilities on the Easement Property, the general surface of the ground shall be restored as nearly as reasonably can be done, given the existence of these pipelines or District Facilities, to the grade and condition it was in immediately prior to construction. Topsoil shall be replaced in cultivated and agricultural areas, and any excess earth resulting from installation by the District shall be removed from the Easement Property at the expense of the District. The District agrees that for a period of one year following construction which involves disturbance of the surface of the ground, the District will maintain the surface elevation and quality of the soil by correcting any settling or subsiding that occurs as a result of the work done by the District within the Easement Property.

10. Grantor retains the right to the use and occupancy of the Easement Property insofar as such use and occupancy is consistent with the terms of this Agreement and does not impair the District's use of the Easement. Grantor and its successors, assigns, together with licensees, or guests, agree to release the District from any and all claims arising from the construction, installation, use, maintenance, repair replacement, operations or other acts associated with the District's facilities on the Property, except for claims arising from negligence on the part of the District. Grantor and its successors, assigns, together with licensees, or guests, agree to indemnify and hold harmless the District from any and all claims arising from the use of the Property or use of adjacent property by Grantor its successors, agents, licensees or guests.

11. It is mutually agreed by and between the parties hereto that the District may commence the exercise of its rights to the use of the Easement forthwith, or it may postpone the exercise of all or some part of its rights hereunder to some future time.

12. Grantor warrants that it has full right and lawful authority to make the grant herein contained, and promises and agrees to defend the District in the exercise of its rights hereunder.

13. The failure of the District to insist, in any one or more instances, upon a strict performance of any of the obligations, covenants, or agreements herein contained, or the failure of the District in any one or more instances to exercise any option, privilege, or right herein contained, shall in no way be construed to constitute a waiver, relinquishment or release of such obligations, covenants, or agreements, and no forbearance by the District of any default hereunder shall in any manner be construed as constituting a waiver of such default.

14. If the District abandons use and operation of the District Facilities installed

on the Easement Property, such abandonment shall not constitute abandonment of its rights under this Agreement or the Easement.

15. The provisions of this Agreement are severable. Illegality or unenforceability of any provision herein shall not affect the validity or enforceability of the remaining provisions in this Agreement.

16. Each and every one of the benefits and burdens of this Agreement shall inure to and be binding upon the respective legal representatives, heirs, executors, administrators, successors and assigns of the parties hereto. In the event any party hereto or its successor or assign seeks to enforce its rights hereunder through litigation, arbitration or other administrative proceeding, the non-prevailing party shall be required to pay the reasonable attorney fees and costs of the prevailing party as part of any judgment, order, or award.

17. The Grantor reserves the right to grant further easement interests in the Easement Property to other utilities and grantees upon obtaining written consent from the District, which consent shall not be unreasonably withheld if the District's rights to the use of the Easement will not be materially impaired by such grant; provided, that:

(a) Such further easement interests shall be no closer than ten (10) feet from the District's existing and any future planned District Facilities, except as stated in (b).

(b) In the case of utilities crossing District lines or other District Facilities, crossings shall be perpendicular where possible and the other utilities shall be installed in accordance with the District's Rules and Regulations and Design Standards and buried at least one and one (1½) half feet below any existing or future planned District Facilities. The utility shall take reasonable measures required by the District to protect in place any existing District Facilities, and the District may require a representative of the District to be on-site for such installation, at the cost of the additional grantee.

18. This Agreement shall be construed in accordance with the laws of the State of Colorado. In the event of any dispute over the Agreement's terms and conditions, the exclusive venue and jurisdiction for any litigation arising hereunder shall be in the District Court of Adams County, Colorado.

19. Unless special provisions are attached hereto, the above and foregoing constitute the entire agreement between the parties and no additional or different oral

representation, promise or agreement shall be binding on any of the parties hereto, with respect to the subject matter of this Agreement.

SPECIAL PROVISIONS

IN WITNESS WHEREOF, the parties hereto have executed this Easement Agreement as of the day and year first written above.

GRANTOR: _____

_____
Title (if corporate or business entity).

STATE OF COLORADO)
) ss.
COUNTY OF _____)

The foregoing instrument was acknowledged before me this _____ day of _____, 20__, by _____ of _____.

Witness my hand and official seal:

_____
Notary Public

My commission expires: _____

Signatures continue on the next page

SOUTH ADAMS COUNTY WATER
AND SANITATION DISTRICT

By:_____
District Manager

STATE OF COLORADO)
) ss.
COUNTY OF ADAMS)

The foregoing instrument was acknowledged before me this _____ day of _____ 20___, by _____, as District Manager of South Adams County Water and Sanitation District.

Witness my hand and official seal:

_____
Notary Public

My commission expires: _____

[ADD EXHIBIT A – LEGAL DESCRIPTION]

APPENDIX D – EXAMPLE OF DISTRICT "GRANT AND ACCEPTANCE OF UTILITIES AGREEMENT"

(Obtain official version directly from District)

GRANT AND ACCEPTANCE OF UTILITIES AGREEMENT

THIS GRANT AND ACCEPTANCE OF UTILITIES AGREEMENT ("Agreement") is made this day of , 20_____, by and between _____, a ("Grantor"), whose address is _____ _____ and South Adams County Water and Sanitation District acting by and through its South Adams County Water and Sanitation District Activity Enterprise ("District"), a quasi-municipal corporation and political subdivision of the State of Colorado, whose address is 6595 E. 70th Avenue, Commerce City, Colorado 80037-0597.

I. GENERAL

1.1 Purpose. The purpose of this Agreement is to set forth the terms and conditions whereunder Grantor shall convey to the District certain Facilities, as hereinafter defined, and the District will accept the conveyance of those Facilities.

1.2 Platted Area. The Platted Area shall mean the property described in the plat of _____, Filing No. _____, Adams County, Colorado, recorded on _____, under Reception No. _____ of the records in the office of the Clerk and Recorder of Adams County, Colorado.

1.3 Streets. "Streets" shall mean all streets, drives, boulevards, roads, lanes, places, ways and circles within the Platted Area.

1.4 Utility Easements. "Utility Easements" shall mean all easements for utilities within the Platted Area usually located in areas other than Streets and which have been previously granted to the District.

1.5 Facilities. "Facilities" shall mean all lines, mains, and conduits for the transmission of water or sanitary sewer described on **Exhibit A** attached hereto and incorporated herein by reference, together with all appurtenances thereto, including valves, vaults, manholes, ventilators, electric or other control systems, cables, wires and connections. "Facilities" shall not include Service Lines.

1.6 Service Line. "Service Line" shall mean the portion of privately owned pipe connecting an individual residential, commercial, or industrial facility to a District potable main, irrigation main, or sanitary sewer.

II. GRANT AND ACCEPTANCE OF FACILITIES

2.1Construction of Facilities. Grantor states that the Facilities have been constructed in accordance with the District's (a) Design and Construction Standards for Water and Wastewater Facilities dated _____, ("Design and Construction Standards"), (b) South Adams County Water and Sanitation District Rules and Regulations dated _____ ("Rules and Regulations") and (c) those Record Documents described on Exhibit A ("Record Documents").

2.2Grantor represents and warrants that said Facilities are rightfully located within the Streets or Utility Easements, and, where Facilities are located within a Street that has not been dedicated as public right-of-way, a Utility Easement for such Facilities has been granted; and, Grantor shall indemnify, defend and hold harmless the District from any claim (including any lawsuit) challenging the District's right to locate, operate, maintain, repair, and replace the Facilities in such Streets or Utility Easements.

2.3 Inspection of Facilities. The District hereby acknowledges that during Grantor's construction of the Facilities the District has conducted such inspection and performed such reasonable field testing of the Facilities as deemed appropriate for its purposes, and the District has accepted construction of the Facilities. Nothing herein shall be construed to limit Grantor's obligations under Section 2.6. The District

makes no representation to any person regarding the design, construction, or condition of the Facilities, and the District's review of design
plans and inspections and field testing of Facilities was for the sole benefit of the District and is not to be relied on by the Grantor or any other person.

2.4 Grant. For good and valuable consideration, receipt of which is hereby acknowledged, the Grantor hereby grants, sells, transfers and assigns to District, its successors and assigns, the Facilities for its ownership and operation. There shall be delivered to the District herewith a Statement of Costs for the construction of the Facilities being conveyed herein attached to the Bill of Sale, a copy of which is attached hereto as **Exhibit B** and incorporated herein by reference. The Grantor represents that it has fully paid for the construction costs and design costs of the Facilities and that the Facilities are being conveyed clear of any claims or liens.

2.5 Acceptance of Grant. District hereby accepts the grant of the Facilities, for purposes of the District's use, operation and routine maintenance (including work occasioned by ordinary wear and tear), subject to Section 2.8, and the remainder of this Agreement.

2.6 Warranty. Consistent with the District's Design and Construction Standards, Grantor for itself, its successors and assigns, hereby warrants that for a period of two years beginning on _____ ("Warranty Period") the Facilities shall be free from defects in materials or workmanship and hereby agrees that during the Warranty Period, the Grantor shall repair or cause to be repaired any defects in the Facilities required by or resulting from (a) defects in design, workmanship or materials, (b) the construction of streets or utilities within the Platted Area, or (c) failure to follow the standards for construction as set forth in Section 2.1 (collectively, "Defects"). Grantor, for itself, its successors and assigns, further warrants that if any of the Facilities are located within any Streets, and at the end of the Warranty Period the construction, installation and paving of those Streets, including installation of all curbing, gutters, drains and other street improvements, has not been completed, then, as to the repair of valve boxes and manholes, the Warranty Period shall be extended until the date that such Street construction has been completed.

2.7 Warranty Repair Procedures. During the Warranty Period, the District shall be responsible for notifying the Grantor of any Defects and the Grantor shall repair or cause to be repaired any such Defects within 48 hours after receipt of the District's notification. In the event Grantor fails to make such repairs within such 48 hour period, or if such repairs cannot reasonably be accomplished within such 48 hour period and Grantor has not begun diligent efforts to make such repairs within such 48 hour period, the District may, at its option, proceed to repair or cause the repair of the Defects at the Grantor's cost and expense. In the event of emergency repairs which, in the opinion of the District, must be made immediately in order to maintain a reasonable level of water or sanitary sewer service or to allow for use of Streets, the District may make such emergency repairs without prior notice to the Grantor and at the Grantor's cost and expense, but the District shall give Grantor notice thereof as soon as reasonably possible. If the District deems it necessary to flush water mains to maintain water quality control in a portion of the Platted Area in which any of the Streets have not been constructed the District shall provide to Grantor either 48 hours prior notice or, in the event public health concerns make it necessary to flush water mains in a shorter amount of time, as much notice as is

reasonably possible under the circumstances. Thereafter, the Grantor shall provide the necessary manpower and materials to assist District personnel in directing the flow of water from the location of flushing operation in such a manner as to mitigate, to the extent reasonably possible, any damage from the flow of water.

2.8 Final Inspection. On or before 45 days prior to the expiration of the Warranty Period, District and, at the Grantor's option, the Grantor shall conduct the final inspection of the Facilities. The District shall prepare a list of any Defects discovered during such final inspection ("Punch List"). On or before 30 days prior to the expiration of the Warranty Period the District shall submit the Punch List to the Grantor and thereafter the Grantor shall repair or cause to be repaired those items on the Punch List. Any failure by the District to not meet the timelines referenced in this Section shall not relieve the Grantor of its Punch List obligations so long as such Punch List is sent by the District to the Grantor prior to the conclusion of the Warranty Period. Upon completion by the Grantor, to the reasonable satisfaction of the District, of the items contained on the Punch List, the District shall send Grantor a letter indicating the same.

Executed this _____ day of _____, 20____.

GRANTOR: _____

BY: _____
(Authorized Official)

TITLE: _____

ATTEST:

BY: _____
(Secretary)

SOUTH ADAMS COUNTY WATER AND SANITATION DISTRICT

BY: _____
(Manager)

EXHIBIT A
GRANT AND ACCEPTANCE OF UTILITIES AGREEMENT

RECORD DOCUMENTS

GRANTOR: _____

PLATTED AREA

PROJECT NAME: _____

FILING NO.: _____

DATE RECORDED: _____

RECEPTION NO.: _____

RECORD CONSTRUCTION PLANS

DESIGNED BY: _____

PLAN DATE: _____

DISTRICT FILE REFERENCE: _____

APPROVED BY: _____
(District Representative)

DATE RECEIVED: _____

RECORD ELECTRONIC DRAWING FILES

FILE NAME(S): _____

FILE DATE(S): _____

APPROVED BY: _____
(District Representative)

DATE RECEIVED: _____

form updated March, 2026

EXHIBIT B

GRANT AND ACCEPTANCE OF UTILITIES AGREEMENT

BILL OF SALE

KNOW ALL MEN BY THESE PRESENTS, that _____ _____ ("Seller"), whose address is _____ _____, for and in consideration of $1.00 and other valuable consideration, the receipt and sufficiency of which is hereby acknowledged, paid by SOUTH ADAMS COUNTY WATER AND SANITATION DISTRICT acting by and through its SOUTH ADAMS COUNTY WATER AND SANITATION DISTRICT ACTIVITY ENTERPRISE, a quasi-municipal corporation and political subdivision of the State of Colorado ("District"), whose address is 6595 E. 70th Avenue, Commerce City, Colorado 80037-0597, has bargained and sold, and by these presents does hereby grant and convey unto the District, its successors and assigns, free of all encumbrances, liens, security interests or claims of any nature, the following property:

All water mains and associated appurtenances having a cost of $_____ and located in the public street rights-of-way as described by the _____ plat filed in the Adams County Clerk and Recorder's Office or located in the easements described more specifically in ATTACHMENT A attached hereto, and by this reference made a part hereof:

ALSO, all sanitary sewer mains and associated appurtenances having a cost of $. and located in the public street rights-of-way as described by the _____ plat filed in the Adams County Clerk and Recorder's Office or located in the easements described more specifically in ATTACHMENT B attached hereto, and by this reference made a part hereof;

Subject to the terms of the Grant and Acceptance of Utilities Agreement entered into between Seller and the District.

form updated March, 2026

TO HAVE AND TO HOLD the same to the District, its successors and assigns forever.

Dated this _____ day of _____, _____.

SELLER: _____

BY: _____
(Authorized Official)

ATTEST:

BY: _____
(Secretary)

[ATTACH EXHIBIT A – DESCRIPTION OF WATER FACILITIES, PLAT AND EASEMENTS]

[ATTACH EXHIBIT B – DESCRIPTION OF SEWER FACILITIES, PLAT AND EASEMENTS]

form updated March, 2026

APPENDIX E – APPROVED CONSTRUCTION MATERIALS LIST

SOUTH ADAMS COUNTY WATER & SANITATION DISTRICT

APPROVED CONSTRUCTION MATERIALS LIST

November 15, 2024

The manufacturers and materials listed in this document must be used on all potable water, irrigation and sewer utility construction within the South Adams County Water and Sanitation District boundaries. No exceptions to this list will be made for any individual, developer, contractor, or development. The District may update the document periodically as necessary if any new additions or deletions of materials are decided to be made by the District.

The District will consider adding water and sewer products or materials to the list upon request by a manufacturer or sales representative. Requests will not be accepted from individuals, developers, or contractors. In order for a product or material to be considered, the manufacturer or sales representative must submit a written request to the District's Distribution and Collection Systems Manager, and upon request of the District, may also be required to provide to the District a sample of the product or material.

The District will review each request to determine if a product or material meets the requirements set forth in the District's Design Standards and all relevant industry standards. The District will base its review primarily on previous experience and knowledge, and possibly from input of other individuals or entities in the water and sewer industry whose relevant expertise may be sought by the District.

The District may elect to put a sample into use in its system to help make the determination of whether a product or material functions satisfactorily for its intended purpose. In this event, the manufacturer or sales representative shall provide to the District all necessary parts and materials to make the installation into the system. The District reserves the right to be reimbursed fully for all labor and equipment required by District staff to make the installation into the system and any other relevant costs that may be necessary in the evaluation process.

The District will attempt to review each request in an expeditious fashion and to make a determination on the request as quickly as possible. However, it should be expected that the review process may take a considerable amount of time, possibly up to one year or more if a product or material is put into operation in the District's system for evaluation.

A decision will be made in the District's sole discretion. Once the District has made a determination on a product/material request, the Distribution and Collection Systems Manager will send a written response to the manufacturer or sales representative describing the evaluation and presenting the decision of whether or not to add the product/material to the Approved Construction Materials List.

SOUTH ADAMS COUNTY WATER & SANITATION DISTRICT
APPROVED CONSTRUCTION MATERIALS LIST
November 15, 2024

SECTION NO.	DESCRIPTION
5.3.2.1.a	**Ductile Iron Water Pipe (Potable and Irrigation)**
	*American Cast Iron Pipe Co. - Fastite
	*Griffin Pipe Products Co.
	*Pacific States Cast Iron Pipe Co.
	*United States Pipe and Foundry Co. - Tyton Joint
5.3.2.1.b	**PVC Water Pipe (Potable and Irrigation)**
	*Certainteed - Certa_Lok
	*Diamond Plastic Corp.
	*IPEX - Blue Brute
	*JM Eagle
	*North American Pipe Corp.
	*Vinyltech
	*Cresline
5.3.2.3	**Ductile Iron Fittings**
	*Griffin Pipe Products Co.
	*Star Pipe Products
	*Tyler Pipe Industries
	*Union Foundry Co.
	*United States Pipe and Foundry Co.
	*SIP Industries (3”-24”)
5.3.2.3	**PVC Fittings (High Deflection Couplings)**
	*Certainteed - Fluid-Tite
5.3.2.5.b	**Butterfly Valves**
	*Dezurik BAW Style
	*Mueller Lineseal III
	*Pratt Groundhog
	*Valmatic American BFV

5.3.2.5.c	**Gate Valves** *American Cast Iron Pipe Co. - Waterous Series 2500 *Mueller A-2361 Series *United States Pipe and Foundry Co. MetroSeal 250 *Kennedy Resilient Wedge Gate Valve Non-Rising Stem 4" – 12"
5.3.2.5.d	**Combination Air Valves** *ARI Model D-040
5.3.2.5.e	**Potable Valve Boxes** *Castings, Inc. 6850 Series *East Jordan Ironworks 8550 Series *Star Pipe Products VB-0002 – 35B *Tyler/Union 6850 Series
5.3.2.5.f	**Irrigation Valve Boxes** *Castings, Inc. **<u>Curb Stop Boxes</u>** *Castings, Inc. 6500 Series Screw Type *A.Y. McDonald 5700 Series Screw Type
5.3.2.6	**Fire Hydrants** *American Flow Control Waterous Pacer *Mueller Super Centurion 250 *Mueller Vertical AquaGrip Fire Hydrant Shoe
5.3.2.7	**Flushing Hydrants** *Mueller Super Centurion 200 - A-422 w/Weather Shield (Part #143112) & Wrench *Mueller Vertical AquaGrip Fire Hydrant Shoe
5.3.2.8	**Manhole and Vault Materials** *Oldcastle Precast *Vaughn Concrete Products *Colorado Precast Concrete *Copeland Enterprises, Inc. *Forterra Precast Concepts, LLC

5.3.2.9.c(2)	**Mechanical Joint DIP (Wedge Style)** *EBAA Iron Megalug 1100 Series *Star Pipe Products StarGrip Series 3000 *Uni-Flange Series 1400 *Sigma Corporation MJ C153 & C110 Fittings
5.3.2.9.c(3)	**PVC Push-on Joint and with Mechanical Joint Fittings** *EBAA Iron Megalug 2000PV Series *Star Pipe Products StarGrip Series 4000 *EBAA Iron Megalug 1500 Series *EBAA Iron Megalug 1600 Series *Uni-Flange Series 1390 *Star Pipe Products StarGrip Series 1100 *Sigma Corporation One-Lok Model SLCE wedge-style restrainer for PVC pipe and fittings (4”-36”) *Sigma Corporation PV-Lok Model PWP serration-style bell restrainer for PVC pipes (4”-48”)
5.3.2.9.c(4)	**DIP Push-on Joint (Wedge Style)** *EBAA Iron Megalug1700 Series *Star Pipe Products StarGrip Series 3100P *Sigma Corporation One-Lok Model SLDE wedge-style restrainer for ductile iron pipe and fittings (3”-64”)
5.3.2.9.c(5)	**DIP Push-on Joint (Boltless Style)** *American Cast Iron Pipe Co. Flex Ring and Lok-Ring *Griffin Pipe Co. SNAP-LOK *U.S. Pipe TR FLEX *Sigma Corporation PV-Lok Model PWP serration-style bell restrainer for DI pipe (4”-12”)
5.3.2.10	**Pipe Service Saddles** *Ford Style 202BS *Ford Style FS202 *Mueller BR2B *Mueller BR2S

*PowerSeal 3409

*PowerSeal 3417DI

*A.Y. McDonald Model 3845

*A.Y. McDonald Model 3855

*JCM 432 All Stainless Steel Tapping Sleeve

*JCM 406 Coated Double Strap Service Saddle

*JCM 161 All Stainless Steel Repair Clamp

*JCM 241 Optimum Range Coupling

*JCM 502 Stainless Steel Service Saddle

5.3.2.11.c **Potable Service Lines**

*IPEX Q-Line - Blue (3/4" and 1")

*Poly Service Material Class 200 CTS (1 ½" and 2")

- J.M. Eagle Core
- ADS Poly Flex

5.3.2.11.d **Irrigation Service Lines**

*IPEX Q-Line - Purple (3/4" and 1")

*Poly Service Material Class 200 CTS (1 ½" and 2")

- J.M. Eagle Core
- ADS Poly Flex

5.3.2.12.b **3" and Larger Meters**

Compound Meters

*Neptune TRU/FLO

Turbine Meters

*Neptune High Performance

Radio Read Device

*Neptune R900

5.3.2.13 **Copper Meter Setters**

Potable

*730D209WZJJ 33 X 456 X 477 – 5/8" X ¾" Domestic Meter Setter, 9" Height
*730D212WZJJ 33 X 456 X 477 – 5/8" X ¾" Domestic Meter Setter, 12" Height
*730D215WZJJ 33 X 456 X 477 – 5/8" X ¾" Domestic Meter Setter, 15" Height
*730D218WZJJ 33 X 456 X 477 – 5/8" X ¾" Domestic Meter Setter, 18" Height
(3/4" Curb Stop is Integrally mounted to the meter setter)

*730D309WZJJ 33 X 456 X 477 – ¾” Domestic Meter Setter, 9” Height
*730D312WZJJ 33 X 456 X 477 – ¾” Domestic Meter Setter, 12” Height
*730D315WZJJ 33 X 456 X 477 – ¾” Domestic Meter Setter, 15” Height
*730D318WZJJ 33 X 456 X 477 – ¾” Domestic Meter Setter, 18” Height
(3/4” Curb Stop is Integrally mounted to the meter setter)

*730-412 – QZMJ 44 X 456 with 76102K – 1” Domestic Meter Setter, 12” Height/1” Curb Stop
*730-415 – QZMJ 44 X 456 with 76102K – 1” Domestic Meter Setter, 15” Height/1” Curb Stop
*730-418 – QZMJ 44 X 456 with 76102K – 1” Domestic Meter Setter, 18” Height/1” Curb Stop
*730-421 – QZMJ 44 X 456 with 76102K – 1” Domestic Meter Setter, 21” Height/1” Curb Stop
(1” Curb Stop, 76102K is NOT integrally mounted to the meter setter. Ordered separately)

*A.Y. McDonald 720B615WWFF 665 (1-1/2")

*A.Y. McDonald 720B715WWFF 776 (2")

*Ford 80 Series (5/8" through 1") - with use of A.Y. McDonald Q-Line adaptors

*Ford 70 Series (1-1/2" and 2")

*Mueller Series H-1423 or B-2423 (1-1/2" and 2")

<u>Irrigation</u>

*739D209WDJJ 33 X 456 X 477 – 5/8” X ¾” Irrigation Meter Setter, 9” Height
*739D212WDJJ 33 X 456 X 477 – 5/8” X ¾” Irrigation Meter Setter, 12” Height
*739D215WDJJ 33 X 456 X 477 – 5/8” X ¾” Irrigation Meter Setter, 15” Height
*739D218WDJJ 33 X 456 X 477 – 5/8” X ¾” Irrigation Meter Setter, 18” Height
(3/4” Curb Stop is Integrally mounted to the meter setter)

*739D309WDJJ 33 X 456 X 477 – ¾” Irrigation Meter Setter, 9” Height
*739D312WDJJ 33 X 456 X 477 – ¾” Irrigation Meter Setter, 12” Height
*739D315WDJJ 33 X 456 X 477 – ¾” Irrigation Meter Setter, 15” Height
*739D318WDJJ 33 X 456 X 477 – ¾” Irrigation Meter Setter, 18” Height
(3/4” Curb Stop is Integrally mounted to the meter setter)

*739-412WDMJ 44 X 456 with 76102K – 1” Irrigation Meter Setter, 12” Height
*739-415WDMJ 44 X 456 with 76102K – 1” Irrigation Meter Setter, 15” Height
*739-418WDMJ 44 X 456 with 76102K – 1” Irrigation Meter Setter, 18” Height
(1” Curb Stop, 76012K is NOT integrally mounted to the meter setter. Ordered separately)

*76100FDPK ¾” Curb Stop (Mounted to the above 5/8” X ¾” and ¾” Meter Setters
76102K 1” Curb Stop (NOT integrally mounted to the meter setter. Ordered separately).

*A.Y. McDonald 720B615WDFF 665 (1-1/2")
*A.Y. McDonald 720B715WDFF 776 (2")

*Ford 70 Series (1-1/2" and 2")

*Mueller Series H-1423 or B-2423 (1-1/2" and 2")

5.3.2.14 (a) & (b) **Water Meter Pits, Manholes and Vaults**

Manholes and Vaults

*Oldcastle Precast

*Vaughn Concrete Products

*Colorado Precast Concrete

*Copeland Enterprises, Inc. Multi-Setter Meter Vault

*Forterra Precast Concepts, LLC

Concrete Meter Pits

*Oldcastle Precast

*Colorado Precast Concrete

*Forterra Precast Concepts, LLC

Plastic Meter Pits

*Carson Industries by Oldcastle Precast - Heavy Wall Bullet Style

*DFW Plastics Model 242148HW

Meter Pit Dome, Lid and Frost Lid

*Castings, Inc.

*D&L Foundry

Manhole Ring and Cover

*Castings, Inc. – MH-400-24FPCI or equivalent

*D&L Foundry

*Neenah Foundry

Locking Manhole Ring and Cover

*Castings, Inc. - Model DIMH310 with SACWSD keyed McGuard Lock

---

5.3.2.18 **Tracer Wire**

Tracer Wire - *12 Gauge AWG Solid Copper Direct Bury

Splice Kit - *DryConn Waterproof Direct Bury Lug

5.3.2.19 **Tracer Wire Test Station**

*C.P. Mini Box

5.3.2.20	**Air Valve Manholes**
	*Oldcastle Precast *Vaughn Concrete Products *Colorado Precast Concrete *Copeland Enterprises, Inc. Multi-Setter Meter Vault *Forterra Precast Concepts, LLC
5.3.2.21	**Tapping Sleeves**
	Stainless Steel
	*Ford FTSS
	*Mueller H304SS
	*PowerSeal 3490
	Fabricated Steel
	*Ford FTSC
	*Smith Blair 622
5.3.3.1	**PVC Sewer Pipe**
	*JM Eagle
	*North American Pipe
	*Vinyltech/Northern Pipe Products
	*Cresline
	*Diamond Plastics
	Tapping Wye (New Taps)
	*GPK Products
	*Multi Fittings
	*Plastic Trends
	Tapping Saddle - Double Strap Tee Type (Replacement Taps)
	*GPK Products
	*Multi Fittings
	*Plastic Trends
	Cleanouts
	*GPK Products
	*Multi Fittings

	*Plastic Trends
	Miscellaneous Sewer Service Fittings
	*JM Eagle
	*GPK Products
	*Multi Fittings
	*Plastic Trends
	Flexible Couplings
	*Fernco
	*Indiana Seal
5.3.3.3.b	**Manholes**
	*Oldcastle Precast
	*Rinker
	*Vaughn Concrete Products
	*Colorado Precast Concrete
	*Lindsay Precast, Inc. – Firebraugh Division
	*Forterra Precast Concepts, LLC
5.3.3.3.f	**Ring and Cover**
	*Castings, Inc.
	*D&L Foundry
	*Neenah Foundry
	Locking Manhole Ring and Cover
	*Castings, Inc. - Model DIMH310 with SACWSD keyed McGuard Lock
5.3.3.4.b & c	**Grease and Sand Oil Interceptors**
	*Copeland Enterprises, Inc.
	*Oldcastle Precast, Inc.
	*Amcor Precast, Inc.
5.3.4.b	**Electronic Marking Systems**
	Ball Type
	*3M Model 1403-XR (Potable)
	*3M Model 1404-XR (Sewer)

	*3M Model 1408-XR (Irrigation)
	Full Range Type
	*3M Model 1252 (Potable)
	*3M Model 1248-XR/id (Irrigation)
	*3M Model 1253 (Sewer)
5.4.3.3.d(7)	**Manholes for Air Release Valves**
	*Oldcastle Precast
	*Vaughn Concrete Products
	*Colorado Precast Concrete
	*Copeland Enterprises, Inc.
	*Forterra Precast Concepts, LLC
5.4.3.3.e(2)	**Manholes**
	*Oldcastle Precast
	*Vaughn Concrete Products
	*Colorado Precast Concrete
	*Copeland Enterprises, Inc.
	*Forterra Precast Concepts, LLC

Miscellaneous Materials

Irrigation Sampling Station

*Kupferle Foundry Mainguard 92VB

Valve Box Slip Type Risers (Maximum of 2 risers used for a total height not to exceed 3 inches)

*Castings, Inc.

*East Jordan Ironworks

*Star Pipe Products

*Tyler/Union

Corporation Stops, Curb Stops and Miscellaneous Brass Fittings as Needed

*A.Y. McDonald

Sewer Service Backwater Valves

*Backwater Valve Model 4963

*Multi Fittings

Grounding Anode

*Copperhead – ANO-14

Foster Adapter

*InFact Corporation

*Star Pipe Products