MONITORING REPORT OF P.S.C STARCH WASTEWATER TREATMENT AND BIOGAS UTILIZATION PROJECT

Document Prepared By Swiss Carbon Value Ltd.

www.southpole.com

Project Title	P.S.C Starch Wastewater Treatment and Biogas Utilization Project
Version	04
Report ID	300493/02
Date of Issue	19-June-2018
Project ID	417
Monitoring Period	01-September-2013 to 11-May-2016
Prepared By	Swiss Carbon Value Ltd.
Contact	Swiss Carbon Value Ltd. 2/22 Iyara Tower , 6th Floor Soi 2 , Chan Road , Thungwatdorn , Sathorn Bangkok 10120 , Thailand T +66 2 678 8977 , 9 E registries@southpole.com W http://www.southpole.com

Table of Contents

1 Project Details 3

1.1 Summary Description of the Implementation Status of the Project 3
1.2 Sectoral Scope and Project Type 4
1.3 Project Proponent 5
1.4 Other Entities Involved in the Project 5
1.5 Project Start Date 5
1.6 Project Crediting Period 5
1.7 Project Location 5
1.8 Title and Reference of Methodology 6
1.9 Other Programs 7
1.10 Sustainable Development 7

2 Implementation Status 8

2.1 Implementation Status of the Project Activity 8
2.2 Deviations 8

2.2.1 Methodology Deviations 8
2.2.2 Project Description Deviations 9

2.3 Grouped Project 12
2.4 Safeguards 12

2.4.1 No Net Harm 12
2.4.2 Local Stakeholder Consultation 12

3 Data and Parameters 14

3.1 Data and Parameters Available at Validation 14
3.2 Data and Parameters Monitored 20
3.3 Monitoring Plan 31

4 Quantification of GHG Emission Reductions and Removals 32

4.1 Baseline Emissions 32
4.2 Project Emissions 33
4.3 Leakage 34
4.4 Net GHG Emission Reductions and Removals 34

APPENDIX 1 : additional information 36

1 PROJECT DETAILS

1.1 Summary Description of the Implementation Status of the Project

P.S.C. Starch Products wastewater treatment and biogas utilization project, hereafter 'the project activity', involves biogas recovery and its utilization as a fuel in hot oil boiler and steam boilers. The project involves wastewater generation from two different manufacturing units turning out three products (i.e. starch, sweetener and ethanol).

The project was implemented at P.S.C Starch Products Public Company Limited in 28/04/05 (project start date). In the starch unit, raw tapioca is fed into the processes to produce wet starch. For further processing, the wet starch is then separated into two parts, namely native tapioca starch and starch sugar. These two products are manufactured using different procedures. This process generates wastewater which is generated irrespective of the fact if wet starch is converted to native tapioca starch or used as raw material for sweetener products. The production capacity of the starch factory is 200 tonnes of dry starch equivalent products per day, and 240 tonnes of sweetener products per day.

The UASB reactor, designed and controlled by the Biogas Advisory Union Foundation, was the first system to be implemented in April 2005. The UASBs are assigned to treat wastewater from starch factory. During the early stage of operation, the UASBs reactor could not reach expected performance and the project owner decided to install a covered lagoon (CL1) in order to pre-treat the wastewater before feeding to UASBs. The CL1 was put on a newly constructed lagoon. Later, in 2006, a covered sheet at the existing first open anaerobic lagoon was installed to collect the biogas generated and turned to be covered lagoon 2 (CL2). This covered lagoon was designed to receive wastewater from sweetener factory together with the effluent from the UASBs reactor.

In October 2009, a new ethanol plant started operation in line with these existing facilities. In the absence of the project activity, the wastewater from the ethanol plant would have been treated in an open pond anaerobic system. The project activity involves the construction of a new covered lagoon (CL3) with biogas recovery.

The biogas generated by the overall system (UASB + CL1 + CL2 + CL3) will be used at sweetener plant (steam boilers) , starch plant (hot oil boiler) and sweetener plant (electricity generation). It must be mentioned that due to unsteady fuel mixture of biomass and coal, the components of electricity production and fuel replacement will not be claimed for emission reduction.

Table 1 : Brief description of equipment in the project activity

Project / Baseline Component	Brief description
Lagoon system	The lagoon system consists of 8 open lagoons.
UASB	Up-flow Anaerobic Sludge Blanket has a volumetric capacity of 8,000m^3.
Covered Lagoon (CL1)	The first covered lagoon has a volumetric capacity of 32,400m^3. This covered lagoon receives the wastewater coming from the starch factory.
Covered Lagoon (CL2)	The second covered lagoon was constructed through a modification of the existing open lagoon. It has a volumetric capacity of 32,400m^3 . This covered lagoon receives the

	wastewater coming from the sweetener factory and from the UASBs.
Covered Lagoon (CL3)	The third covered lagoon has a volumetric capacity of 32,400m^3 This covered lagoon receives the wastewater coming from the ethanol plant.
Gas storage device (or Gas Holder)	Acidification pond is covered with the HDPE sheet to serve as gas storage device or gas holder. The covered lagoons system can also be used for the purpose of gas storage.
Auxiliary drives	Total capacity of the auxiliary drives amount to an approximate of 245.06 kW.

This monitoring report is for the second verification of this project. The project activity achieves 152,426 tCO_2e in this monitoring period.

The first verification report was issued on 06/11/14 for monitoring period from 01/12/09 to 31/08/13. Further background information on this project activity can be found on the VCS website : http://vcsprojectdatabase.org/#/project_details/417

1.2 Sectoral Scope and Project Type

The project activity involves recovery of fugitive biogas from the wastewater released from a starch factory, a sweetener plant and an ethanol plant, using an upflow anaerobic sludge blanket (UASB) system and covered lagoons. The biogas generated is utilized as fuel in a hot oil boiler and steam boilers to produce electricity and heat. Prior to project implementation, a fuel mix based on biomass and coal was used. A conservative approach for the calculation of GHG emission reduction is taken by not claiming emission reductions for the heat and electricity generated.

The project activity will generate emission reductions less than 60ktCO2e per year for the type III component. The type/category of the project activity is thus according to Appendix B, *Simplified Modalities and Procedures for Small-Scale CDM Project Activities,* as follow:

Methane avoidance component:

Type III:	Other Project Activities
Category III.H:	Methane Recovery in Wastewater Treatment
Sectoral Scope 13:	Waste Handling and Disposal
Version:	13

1.3 Project Proponent

Organization name	P.S.C Starch Products Public Company Limited
Contact person	Sarun Sereethoranakul
Title	Mr.
Address	999 Moo.5 Nongyai , Chonburi Thailand
Telephone	+66 38 219 730 – 4
Email	

1.4 Other Entities Involved in the Project

Organization name	Swiss Carbon Value Ltd.
Role in the project	Emission Reduction project developer/consultant
Contact person	Patrick Buergi
Title	Mr.
Address	Technoparkstrasse 1 , 8005 Zurich Switzerland
Telephone	+66 2 678 6979
Email	p.buergi@southpole.com

1.5 Project Start Date

Project start date: 28/04/05 (the date when emissions reduction began).

1.6 Project Crediting Period

The crediting period of this project activity is 10 years , starts from 01/12/09 to 30/11/19 , both days are included.

1.7 Project Location

The project site is located in P.S.C Starch factory, located at address: 999 Nongyai – Bothong road, Nongyai District, Chonburi Province , Thailand , about 150km away from Bangkok.

Geographical coordinates: Latitude 13°18”6.50’N and Longitude 101° 21”49.47’E.

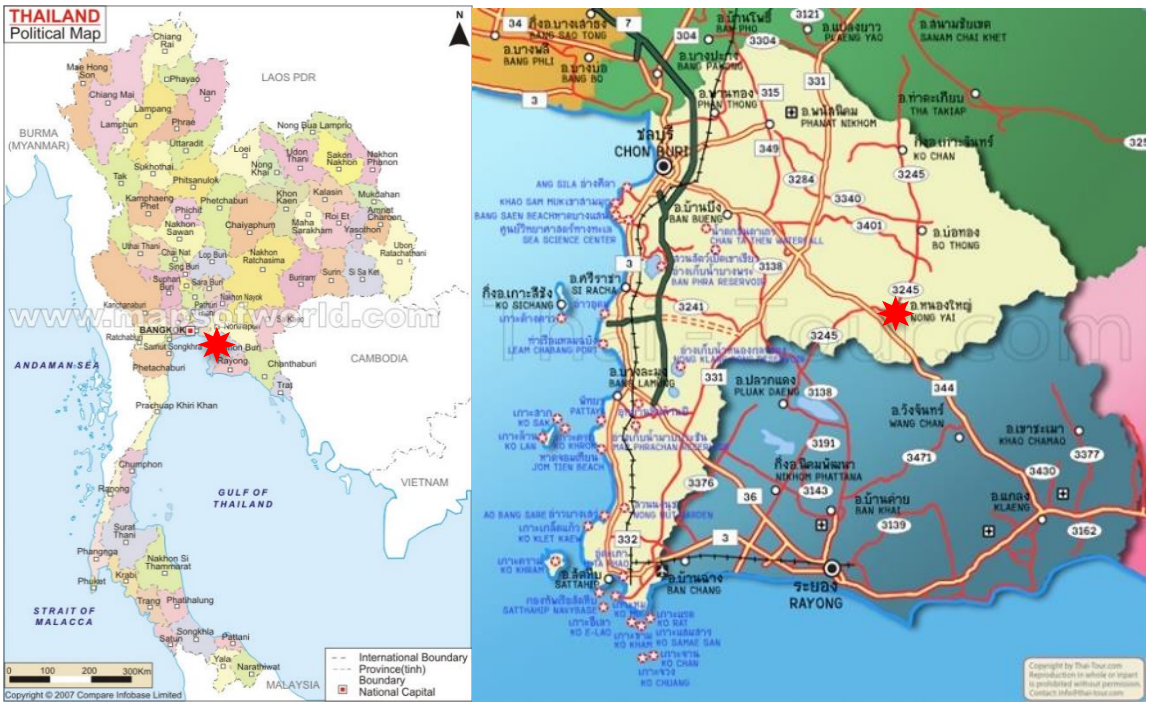

Figure 1 : Project location

1.8 Title and Reference of Methodology

Approved CDM methodology is applied to this project activity. According to Appendix B of the *Simplified Modalities and Procedures for Small-Scale CDM Project Activities,* the project type and category are defined as follows:

Methane avoidance component:

Type III:	Other project activities
Category III.H:	Methane Recovery in Wastewater Treatment
Sectoral Scope 13:	Waste handling and disposal
Version:	13

AMS-III.H refers to:

- AMS.I.D "Grid connected renewable electricity generation" version 14 for estimating project emissions from electricity consumption by the project activity.

AMS.I.D refers to:

- "Tool to calculate the emission factor for an electricity system" version 1.1.

For Greenfield project, the "Indicative simplified baseline and monitoring methodologies for selected small-scale CDM project activity categories", version 12.1 refers to: *"Combined tool to identify the baseline scenario and demonstrate additionality" version 2.2*

1.9 Other Programs

Not Applicable.

1.10 Sustainable Development

Economic:
New jobs are created during the construction and operation phases of the biogas reactor system and of the cover lagoons. As well, regional economic development can foster through contracts to local firms. In addition, not only partial reimbursement on the vast investment cost can be made through utilization of the captured biogas, the additional revenue from the sale of VCUs will also make the project financially feasible.

Sectoral:
This project is a good example of an effective waste to energy project which in turn improves the long-term sustainability of the Thai starch industry.

Social:
The project activity provides direct and indirect employment to the local community during construction of the project activity and as well as during its operation. During construction, employment was offered for lot of local unskilled labors contributing to social well being and economic well being. The involvement of local employees in the project activity helps to enhance the skills of the laborer in the region by training them in different technical areas. In addition, the close collaboration between external experts and local counterparts is expected to promote long-term sustainable partnerships, benefiting local stakeholders.

The substitution of fuel oil with biogas from the project activity results in energy security improvement of region. The noise, arising from pumps and blowers operating in the biogas plant, is insignificant. There are no other occupational health issues identified. The safety aspects of operating the biogas plant are sufficiently addressed.

Environmental:
Due to higher efficiency and improved process control, the quality of treated wastewater is expected to improve substantially with the implementation of the project activity. Thus, wastewater leakage is unlikely. It must be mentioned that the project activity has zero discharge to the river or other natural sources such as soils and groundwater. The project has positive impacts on the local environment by improving air quality through reduction in odour and cleaner emissions. This can in turn improve the standard of living of the local population. The capacity of this technological process to replace fuel oil and generate electricity can also be regarded as a potential for reducing dependency on fossil fuels and for promoting diversification of energy resources. Ensuring energy security in this way can be seen as a contribution to sustainable development, particularly during this era of growing fuel prices.

Note that wastewater overflow might happen during the rainy season if the precipitation rate is higher than the outflow rate of the final pond for a sustained period of time. Wastewater overflow can lead to a variety of problems that have significant environmental impacts. Excess nutrients in the wastewater will stimulate excessive plant growth which can disrupt normal functioning of the

ecosystem, known as Eutrophication. Such problem could lead to social conflicts within the community. While wastewater can overflow from any ponds in the old anaerobic lagoon, the overflow can only happen from the post-treatment ponds in the closed anaerobic system. Since the average water quality at the outlet of the project activity is better than that in the anaerobic lagoon ponds, the environmental impacts from overflow of wastewater will be significantly reduced. Overall, the project will have positive impacts on the local environment by improving air quality through reduction in odor and cleaner emissions. This can in turn improve the standard of living of the local population.

2 IMPLEMENTATION STATUS

2.1 Implementation Status of the Project Activity

The starting date of each treatment units are summarized in below.

Project Components	Date of operation start / Commissioning
UASB	Year 2005
CL1	Year 2006
CL2	Year 2007
CL3	Oct – 2009

- The biogas treatment system , UASBs and covered lagoons have been completely operated in this monitoring period as per information in the registered PD.
- After the implementation of covered lagoon no.3 , the wastewater treatment process has been reconfigured from design in the registered PD. Since the wastewater discharged from ethanol plant has very high temperature and cannot be cooled down in the covered lagoon. The anaerobic digestion cannot be occurred under high temperature ambient. Hence the CL3 cannot work properly and the effluent from this lagoon still has very high COD content. The effluent from CL3 is retreated at CL1 instead of discharging to open lagoons. This reconfiguration has been started in Oct-2009 , one weeks after starting feeding wastewater into CL3. This changing affects the calculation of $PE_{ww,discharge,PJ,y}$ in equation 8 of the registered PD , the description for this scenario is provided in deviation 1. The same approach has been provided and approved in the previous verification.

2.2 Deviations

2.2.1 Methodology Deviations

There is no methodology deviation proposed in this monitoring period.

2.2.2 Project Description Deviations

Deviation 1

Description of deviation

The $COD_{ww,discharge.PJ.y}$ is the COD of water coming out of from CL2 instead of the wastewater coming out from CL3.

Period of deviation

This deviated approach is applied for this whole monitoring period.

Deviated approach

The $COD_{ww,discharge.PJ.y}$ is the COD of the treated wastewater discharged into the sea , river or lake in the project scenario. In this case , the wastewater treated by anaerobic project activity which ended by CL2 , is discharged into the pond.

Although the additional amount of biogas generated from the treating of effluent from CL3 at CL1 increases the amount of biogas combusted. The amount of biogas combusted is used for MD_y calculation and the result of MD_y is raised up in the same way. As per equation 13 , in line with conservative principle , the final result of ER_{expost} is from the COD approach which is lower than MD_y approach. Hence , this changing has no effect to the achieved emission reductions in this monitoring period.

Justification for deviated approach

The $PE_{ww,discharge,y}$, methane emissions from degradable organic carbon in treated wastewater , is the methane emission from the digestion of residue COD , COD remained after anaerobic digestion with biogas recovery system , in the open system which methane can freely release into the environment.

In the monitoring diagram shown in the registered PD , the treated wastewater from CL3 is sent to pond system. The $COD_{ww,discharge.PJ.y}$ is the COD at the outlet of CL3.

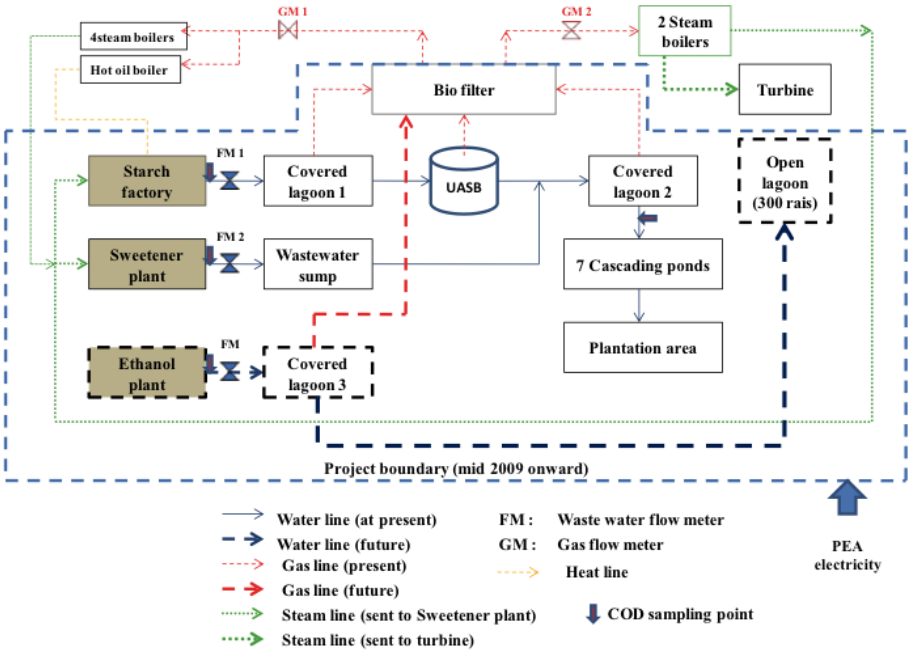

Figure 2 : Monitoring diagram from the registered PD

As per the plant reconfiguration , the treated wastewater from CL3 is sent to CL1. Then the last unit for closed anaerobic system is CL2 before discharge to pond system. *The* $COD_{ww,discharge.PJ.y}$ is changed to be the COD of treated wastewater from CL2 as per the new monitoring diagram below.

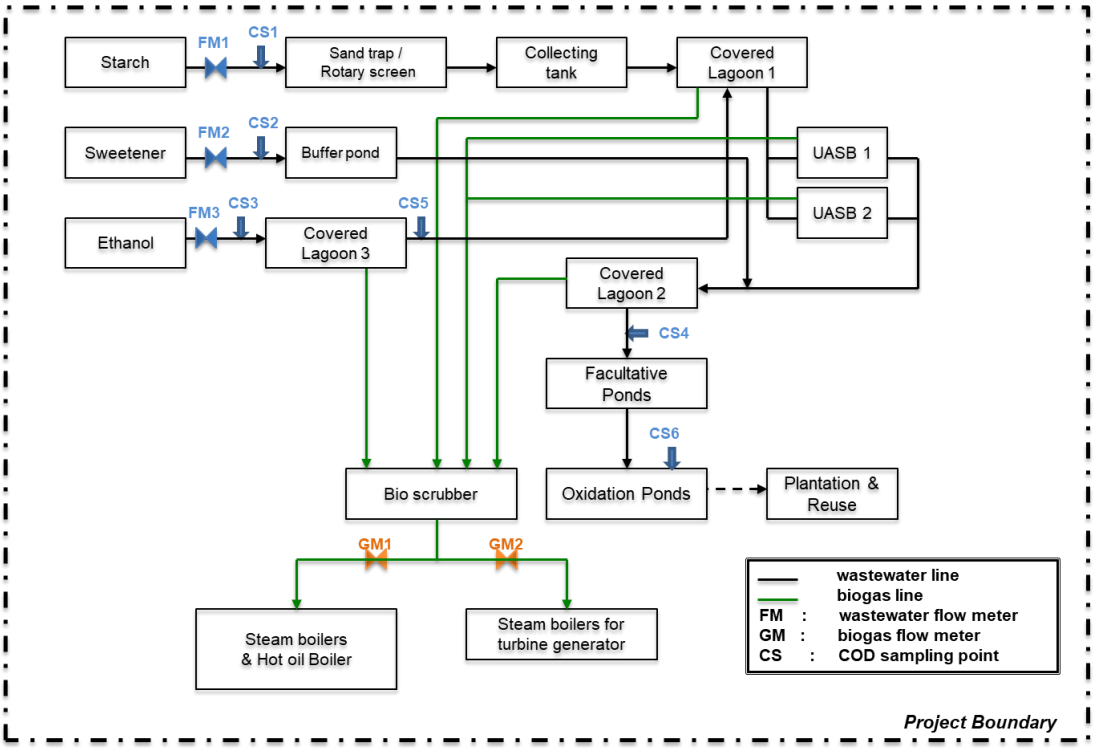

Figure 3 : New monitoring diagram for this monitoring period

Deviation 2

Description of deviation

The $COD_{y,ww.untreated,starch}$, $COD_{y,ww.untreated,sweetener}$, $COD_{y,ww.untreated,ethanol}$, $COD_{y,ww.reated,CL2}$, $COD_{y,ww.reated,CL3}$ and $COD_{y,ww,treated.lagoon}$ are not measured on daily basis which determined in the monitoring plan for COD parameters in the registered VCS PD.

Period of deviation

This deviated approach is applied for the monitoring period.

Deviated approach

The wastewater analysis of the samples were carried out by internal laboratory, but not on every operational days. Refer to AMS III.H version 18 , for COD parameters : Average value may be used through sampling with the confidence/precision level 90/10 . The example of calculating step from Annex 13 of EB 48 which is followed the standard statistical calculation is applied.

1) Calculate sample mean (μ).

$$\mu_{COD,y} = \sum_{m=1}^{n_m} COD_{y,ww} \Big/ n_m$$

Where :

$\mu_{COD,y}$ = Mean of the $COD_{ww,untreated,y}$ and $COD_{y,out,PJ,lagoon}$ in year y ()

$COD_{y,ww}$ = Monitored $COD_{y,ww}$ in measurement m in year y

n_m = Number of measurements m in year y (minimum is 4)

2) Calculate the sample standard deviation (σ).

$$\sigma_{COD,y} = \sqrt{\sum_{m=1}^{n_m} \left(COD_{y,ww} - \mu_{COD,y}\right)^2 \Big/ (n_m - 1)}$$

Where :

$\sigma_{COD,y}$ = Standard deviation of COD_y the in year y ()

3) Calculate the 95% confidence interval.

$$\mu_{COD,y} - t * {\sigma_{COD,y}}\Big/{\sqrt{n_m}} \leq COD_{y,ww} \leq \mu_{COD,y} + t * {\sigma_{COD,y}}\Big/{\sqrt{n_m}}$$

Where :

t = Value from standard t distribution for a confidence level of 95% with degrees of freedom n_m-1[1]

4) Use the lower bound of the 95% confidence interval obtained above for $COD_{y,ww,untreated}$ and the upper bound one for $COD_{y,ww,treated}$ to ensure conservativeness.

[1] http://www.stat.tamu.edu/~lzhou/stat302/T-Table.pdf

The above calculating is performed in the ER calculation spreadsheet.

Justification for deviated approach

This approach is in line with conservative principle , the upper bound value is used for project emission calculation while the lower bound value is used for baseline emission calculation , to achieve the lower emission reductions.

Deviation 3

Description of deviation

Refer to the latest version of VCS Program rules , which allows project to transition immediately to using the global warming potentials set out in the IPCC Fourth Assessment Report.

Period of deviation

This deviated approach is applied for the monitoring period.

Deviated approach

The global warming potential (GWP) to be applied in the emission reductions in this monitoring period is changed from 21 (in the registered VCS PD) to 25.

Justification for deviated approach

This approach is in line with the latest version of VCS Program rules and does not impact the applicability of the methodology, additionality or appropriateness of the baseline scenario.

2.3 Grouped Project

This project activity is not a grouped project.

2.4 Safeguards

2.4.1 No Net Harm

The project activity does not have potential to create any negative environmental and socio-economic impact.

2.4.2 Local Stakeholder Consultation

A detailed Stakeholder consultation was conducted by the PP at the project site and is described as follows:

Invitation procedure

The project owner of P.S.C. Starch Products PCL has conducted the stakeholder consultation with assistance from South Pole Carbon Asset Management Limited (Switzerland based company responsible for VER project development).

Stakeholder groups have been identified and informed through oral means about the meetings.

Place and date of the meetings
The stakeholder consultation was held in the factory compound on December 9, 2008. All participants were able to examine the location where the proposed project will take place.

Meeting Participants on December 9, 2008
Local residents and representatives attended the meeting from following stakeholder categories:

1. Local residents
2. Local government representatives
3. Employees

20 participants have followed the invitation and attended the meeting.

Language
Meeting was conducted and documented in Thai (local language).

Meeting procedures
- Project description of the project and environmental impacts (10 min)
- Questions and Answers session (5 min)
- General feedback (5 min)

Meeting documents and protocols
On completion of the meeting the documentation in following subjects was collected and attested by the signatures of the stakeholders that were present:
1. Non-technical description of the project
2. Environmental impacts of the project
3. Contribution to sustainable development

Compilation of comments received:
The overall response to the project, from all invited stakeholders, was encouraging and positive towards local environment and social-economic conditions by cleaning the wastewater in a more efficient way, avoiding odour emissions from the lagoons and creating new jobs.

No adverse reactions or comments have been received during the stakeholder consultation process. The project participants did not recognize any need to make changes to the project design or monitoring plan.

Short description*:*
The proposed project is implemented at P.S.C. Starch Products PLC.; a starch plant with a total production capacity of 200 t of native starch per day, 400 m3 per day of sweetener products and expected ethanol of 1600 m3 per day, generating an average of 350,000 m^3, 240,000 m^3 and 380000 m^3 per year respectively.

The proposed project activity entails the installation of an anaerobic wastewater treatment facility. Upflow anaerobic sludge blanket (UASB) biogas reactor technology, at the existing starch manufacturing plant, replaces the open anaerobic lagoon based system (composed of 12 cascading lagoons with a retention time of more than one year). The biogas reactor system will generate and recover biogas for energy generation purposes, avoiding methane emissions to the

atmosphere. The captured methane is used as fuel in existing heat generating devices in the starch plant replacing heavy fuel oil, which will lead to further CO2 reductions by replacing a fossil fuel. Any surplus methane is flared in an open flare.

A diagram summarising the technology installed is provided below:

***Environmental impacts**:*
The quality of the treated water, which is subject to effluent standards regulated by the environmental authorities, will improve substantially due to higher efficiency and improved process control of the biogas reactor as compared to open lagoons. In fact, the biogas reactor system allows the starch factory to reuse the treated effluent in the tapioca production process at more regular intervals and with less loss during storage, contributing to water conservation. Further, the project will avoid odour emissions as compared to an uncovered anaerobic lagoon, which contributes significantly to an improved life quality around the project site.

***Contribution to sustainable development**:*
The project activity does also contribute to technology transfer from Thailand and efficiency improvement of the agro-industry, which will benefit a rural and underdeveloped region of the country. New jobs are created during the construction and operation of the biogas reactor system and regional economic development is fostered through contracts to local firms related to construction, operation, and maintenance of the plant.

Current Practice
The project proponent maintains a register at the plant, to make sure any current feedback is provided by local people in fair and transparent manner

3 DATA AND PARAMETERS

3.1 Data and Parameters Available at Validation

Data / Parameter	GWP_{CH4}
Data unit	-
Description	Global warming potential of methane gas
Source of data	AMS III.H version 13
Value applied:	25
Justification of choice of data or description of measurement methods and procedures applied	Intergovernmental Panel on Climate Change, Climate Change 1995: The Science of Climate Change (Cambridge, UK: Cambridge University Press, 1996).
Purpose of the data	This parameter is used for baseline and project emission calculations.

Comments	The default value is changed as per VCS standard , v.3.7 , more description is provided as Project Description Deviation 3 in section 2.2.2.

Data / Parameter	$B_{o,ww}$
Data unit	kg CH_4 / kg COD
Description	Methane generation capacity of COD in wastewater
Source of data	IPCC default value, corrected as per methodology AMS –III.H is used for estimation
Value applied:	0.21
Justification of choice of data or description of measurement methods and procedures applied	IPCC default value , based on AMS III.H.
Purpose of the data	This parameter is used for baseline emission calculations.
Comments	-

Data / Parameter	UF_{BL}
Data unit	Factor
Description	Model correction factor to account for model uncertainties
Source of data	AMS –III.H version 13
Value applied:	0.94
Justification of choice of data or description of measurement methods and procedures applied	Reference: FCCC/SBATA/2003/10/Add2, page 25. Based on AMS III.H.
Purpose of the data	This parameter is used for baseline emission calculations.
Comments	-

Data / Parameter	UF_{PJ}
Data unit	Factor
Description	Model correction factor to account for model uncertainties
Source of data	AMS –III.H version 13
Value applied:	1.06
Justification of choice of data or description of	Reference: FCCC/SBATA/2003/10/Add2, page 25. Based on AMS III.H.

measurement methods and procedures applied	
Purpose of the data	This parameter is used for project emission calculations.
Comments	-

Data / Parameter	$MCF_{ww,treatment,BL,lagoon}$
Data unit	-
Description	Methane correction factor for the baseline anaerobic wastewater treatment system
Source of data	Table II.H 1 from AMS III.H version 13
Value applied:	0.8
Justification of choice of data or description of measurement methods and procedures applied	The baseline wastewater treatment system consists in a succession of deep lagoons (depth more than 4.5 metres) therefore MCF value is chosen as 0.8.
Purpose of the data	This parameter is used for baseline emission calculations.
Comments	IPCC Default values from chapter 6 of volume 5 page no 6.21. Waste in 2006 IPCC Guidelines for National Greenhouse Gas Inventories.

Data / Parameter	$MCF_{ww,treatment,PJ,k}$
Data unit	-
Description	Methane correction factor for the project wastewater treatment system k equipped with the biogas recivery
Source of data	Table II.H 1 from AMS III.H version 13
Value applied:	$MCF_{ww, treatment, PJ,UASB} = 0.8$ $MCF_{ww, treatment, PJ,CL1} = 0.8$ $MCF_{ww, treatment, PJ,CL2} = 0.8$ $MCF_{ww, treatment, PJ,CL3} = 0.8$
Justification of choice of data or description of measurement methods and procedures applied	All MCF values have been chosen in accordance with table III.H.1 from methodology AMS III.H., version 13. The project wastewater treatment system equipped with biogas recovery consists of a UASB system and covered lagoons, therefore MCF value is chosen as 0.8.
Purpose of the data	This parameter is used for project emission calculations.
Comments	-

Data / Parameter	$MCF_{ww,treatment,PJ,lagoon}$
Data unit	-
Description	Methane correction factor for the project wastewater treatment system not equipped with biogas recovery
Source of data	Table II.H 1 from AMS III.H version 13
Value applied:	0.8
Justification of choice of data or description of measurement methods and procedures applied	All MCF values have been chosen in accordance with table III.H.1 from methodology AMS III.H., version 13. The project wastewater treatment system not equipped with biogas recovery consists of anaerobic lagoons, therefore MCF value is chosen as 0.8.
Purpose of the data	This parameter is used for project emission calculations.
Comments	-

Data / Parameter	$MCF_{ww,PJ,discharge}$
Data unit	-
Description	Methane correction factor based on discharge pathway in the project situation
Source of data	Table II.H 1 from AMS III.H version 13
Value applied:	0.8
Justification of choice of data or description of measurement methods and procedures applied	The wastewater coming out of the covered lagoon CL3 will be discharged into a series of new anaerobic lagoons. A value of 0.8 is chosen for conservativeness.
Purpose of the data	This parameter is used for project emission calculations.
Comments	-

Data / Parameter	CFE_{ww}
Data unit	-
Description	Capture and utilization/combustion/flare efficiency of the methane recovery and combustion/utilization equipment in the wastewater treatment.
Source of data	Equation 10 in AMS III.H, Version 13 methodology
Value applied:	0.9
Justification of choice of data or description of measurement methods and procedures applied	Default value is used here. Based on AMS III.H., applicable for equation(s) (5) in the methodology.

Purpose of the data	This parameter is used for project emission calculations.
Comments	-

Data / Parameter	$\eta_{BL,starch}$
Data unit	%
Description	COD removal efficiency of baseline wastewater treatment system for the starch and sweetener plants
Source of data	Historical data
Value applied:	98.61%
Justification of choice of data or description of measurement methods and procedures applied	The COD removal efficiency is based on monitored historical COD values for baseline system before implementation of project activity.

Date	COD_{in} (outlet) (mg/l)	COD_{out} (Pond 8) (mg/l)	%COD removal
Sep_2003	11570		
Jan_2004		120	
Feb_2004	16410	370	97.75%
Mar_2004	13790	135	99.02%
Apr_2004	14835	230	98.45%
May_2004	17430	280	98.39%
Jun_2004	15410	245	98.41%
Aug_2004	13420	155	98.85%
Sep_2004	15080	210	98.61%
Oct_2004		145	
Nov_2004	18605	258	98.61%
Dec_2004		145	
Jan_2005	16475	105	99.36%
Mar_2005		74	
Average	**15303**	**190**	**98.61%**

Purpose of the data	This parameter is used for baseline emission calculations.
Comments	-

Data / Parameter	$\eta_{BL,ethanol}$
Data unit	%
Description	COD removal efficiency of baseline wastewater treatment system for the ethanol plants
Source of data	Historical data
Value applied:	87.76%
Justification of choice of data or description of measurement methods and procedures applied	The COD removal efficiency is based on COD values for open lagoons system multiply by 0.89.
Purpose of the data	This parameter is used for baseline emission calculations.
Comments	-

Data / Parameter	FE
Data unit	%
Description	Flare efficiency
Source of data	Tool to determine project emissions from flaring gases containing methane
Value applied:	50%
Justification of choice of data or description of measurement methods and procedures applied	Default value for open flare as per Tool to determine project emissions from flaring gases containing methane has been applied.
Purpose of the data	This parameter is used for project emission calculations.
Comments	-

Data / Parameter	P_{el}
Data unit	kW
Description	Total electrical capacity of the equipment installed in the project activity
Source of data	Plant data
Value applied:	245.1
Justification of choice of data or description of measurement methods and procedures applied	The total installed capacity of the present equipment is used.
Purpose of the data	This parameter is used for project emission calculations.
Comments	-

Data / Parameter	EF_y
Data unit	tCO_2/MWh
Description	CO_2 emission factor for grid power
Source of data	“The calculation of emission factor for an electricity system in Thailand 2007”, DEDE.
Value applied:	0.5057
Justification of choice of data or description of measurement methods and procedures applied	EF_y is calculated according to the “Tool to calculate the emission factor for an electricity system” as determined in the respective small-scale methodology for grid connected electricity generation (AMS I.D. version 14).
Purpose of the data	This parameter is used for project emission calculations.
Comments	-

3.2 Data and Parameters Monitored

Data / Parameter	$Q_{y,ww,starch}$
Data unit	m^3
Description	Volume of wastewater treated in the year y from the starch plant
Source of data	Measured - Volumetric flow meter : FM1
Description of measurement methods and procedures to be applied	**Monitoring:** Volumetric flow meter **Data type:** Records in both hard files (log sheets) and soft files. **Responsibility:** The designated employee from the wastewater treatment system division is responsible for reading the data from meter and then recording is done in both hard and soft files.
Frequency of monitoring/recording	**Frequency:** Continuous measurements **Recording:** Cumulative readings are recorded daily.
Value monitored:	01/09/13 to 31/12/13: 0 01/01/14 to 31/12/14: 606,941 01/01/15 to 31/12/15: 787,850* 01/01/16 to 11/05/16: 212,566 *The monitored data is adjusted for calibration delay.
Monitoring equipment	Meter name: FM1 Serial Number: 3K220000021352 Brand: ABB Model: FEV11 Accuracy: 0.4% Calibration Frequency: Once in 3 years Calibration Date: 10/03/12, 06/05/15
QA/QC procedures to be applied	Periodic calibrations (Once in three years) for wastewater flow meter are ensured via an external agency.
Purpose of the data	Calculation of baseline and project emissions
Calculation method	-
Comments	-

Data / Parameter	$Q_{y,ww,sweetener}$
Data unit	m^3
Description	Volume of wastewater treated in the year y from the sweetener plant
Source of data	Measured - Volumetric flow meter : FM2
Description of measurement methods and procedures to be applied	**Monitoring:** Volumetric flow meter **Data type:** Records in both hard files (log sheets) and soft files. **Responsibility:** The designated employee from the wastewater treatment system division is responsible for reading the data from meter and then recording is done in both hard and soft files.
Frequency of monitoring/recording	**Frequency:** Continuous measurements **Recording:** Cumulative readings are recorded daily.
Value monitored:	01/09/13 to 31/12/13: 431,457 01/01/14 to 31/12/14: 114,603 01/01/15 to 31/12/15: 892,911* 01/01/16 to 11/05/16: 383,936 *The monitored data is adjusted for calibration delay.
Monitoring equipment	Meter name: FM2 Serial Number: 3K220000021353 Brand: ABB Model: FEV11 Accuracy: 0.4% Calibration Frequency: 1 / 3 years Calibration Date: 10/03/12, 06/05/15 Meter name: FM2 Serial Number: 6201472 Brand: Rosemount Model: M4Q4 Accuracy: 0.35% Calibration Frequency: 1 / 3 years Calibration Date: 26/12/17

QA/QC procedures to be applied	Periodic calibrations (Once in three years) for wastewater flow meter are ensured via an external agency.
Purpose of the data	Calculation of baseline and project emissions
Calculation method	-
Comments	-

Data / Parameter	$Q_{y,ww,Ethanol}$
Data unit	m^3
Description	Volume of wastewater treated in the year y from the ethanol plant
Source of data	Measured - Volumetric flow meter : FM3
Description of measurement methods and procedures to be applied	**Monitoring:** Volumetric flow meter **Data type:** Records in both hard files (log sheets) and soft files. **Responsibility:** The designated employee from the wastewater treatment system division is responsible for reading the data from meter and then recording is done in both hard and soft files.
Frequency of monitoring/recording	**Frequency:** Continuous measurements **Recording:** Cumulative readings are recorded daily.
Value monitored:	01/09/13 to 31/12/13: 179,862 01/01/14 to 31/12/14: 368,935 01/01/15 to 31/12/15: 565,904* 01/01/16 to 11/05/16: 140,027 *The monitored data is adjusted for calibration delay.
Monitoring equipment	Meter name: FM3 Serial Number: S5G802553 736 Brand: Yokogawa Model: APX1500 Accuracy: 0.35% Calibration Frequency: 1 / 3 years Calibration Date: 29/03/12, 06/05/15
QA/QC procedures to be applied	Periodic calibrations (Once in three years) for wastewater flow meter are ensured via an external agency.

Purpose of the data	Calculation of baseline and project emissions
Calculation method	-
Comments	-

Data / Parameter	$COD_{y,ww,untreated,starch}$
Data unit	mg/l
Description	COD of wastewater from starch plant : CS1
Source of data	Measured – Titrimetric analysis
Description of measurement methods and procedures to be applied	**Monitoring:** Closed reflux titrimetric method in the onsite laboratory of the treatment plant. Sample will be taken from the outlet of wastewater from starch plant before entering CL1. **Data type:** Records in both hard and soft files. **Responsibility:** The result is logged by the operator in the plant operation report.
Frequency of monitoring/recording	**Frequency:** Daily basis **Recording :** Daily records
Value monitored:	01/09/13 to 31/12/13: 15,576 01/01/14 to 31/12/14: 11,953 01/01/15 to 31/12/15: 14,921 01/01/16 to 11/05/16: 23,880
Monitoring equipment	-
QA/QC procedures to be applied	• In case the COD value is not available for a particular day, the same shall be estimated in a conservative manner (as per deviation 2 of section 2.2) or ignored out of emission reduction estimation. • The closed reflux titrimetric method is well documented[2] and well accepted by international standards ; method 5220 C approved by United States Environmental Protection Agency – USEPA
Purpose of the data	Calculation of baseline and project emissions
Calculation method	-
Comments	-

[2] The *Examination of water and wastewater" , 1st Ed 2005 and Wastewater analysis manual from Environmental Engineering Association , Thailand , 3rd Ed. 1997*

Data / Parameter	$COD_{y,ww,untreated,sweetener}$
Data unit	mg/l
Description	COD of wastewater from sweetener plant : CS2
Source of data	Measured – Titrimetric analysis
Description of measurement methods and procedures to be applied	**Monitoring:** Closed reflux titrimetric method in the onsite laboratory of the treatment plant. Sample will be taken from the outlet of wastewater from sweetener plant before entering CL2. **Data type:** Records in both hard and soft files. **Responsibility:** The result is logged by the operator in the plant operation report.
Frequency of monitoring/recording	**Frequency:** Daily basis **Recording :** Daily records
Value monitored:	01/09/13 to 31/12/13 – 11,124 01/01/14 to 31/12/14 – 8,609 01/01/15 to 31/12/15 – 10,546 01/01/16 to 11/05/16 – 16,832
Monitoring equipment	-
QA/QC procedures to be applied	• In case the COD value is not available for a particular day, the same shall be estimated in a conservative manner (as per deviation 2 of section 2.2) or ignored out of emission reduction estimation. • The closed reflux titrimetric method is well documented[3] and well accepted by international standards ; method 5220 C approved by United States Environmental Protection Agency – USEPA
Purpose of the data	Calculation of baseline and project emissions
Calculation method	-
Comments	The adjusting of monitored values is explained in section 2.2.2 - Deviation 2.

Data / Parameter	$COD_{y,ww,untreated,Ethanol}$
Data unit	mg/l
Description	COD of wastewater from ethanol plant : CS3
Source of data	Measured – Titrimetric analysis

[3] The *Examination of water and wastewater" , 1st Ed 2005 and Wastewater analysis manual from Environmental Engineering Association , Thailand , 3rd Ed. 1997*

Description of measurement methods and procedures to be applied	**Monitoring:** Closed reflux titrimetric method in the onsite laboratory of the treatment plant. Sample will be taken from the outlet of wastewater from ethanol plant before entering CL3. **Data type:** Records in both hard and soft files. **Responsibility:** The result is logged by the operator in the plant operation report.
Frequency of monitoring/recording	**Frequency:** Daily basis **Recording :** Daily records
Value monitored:	01/09/13 to 31/12/13: 22,963 01/01/14 to 31/12/14: 26,282 01/01/15 to 31/12/15: 35,940 01/01/16 to 11/05/16: 51,889
Monitoring equipment	-
QA/QC procedures to be applied	• In case the COD value is not available for a particular day, the same shall be estimated in a conservative manner (as per deviation 2 of section 2.2) or ignored out of emission reduction estimation. • The closed reflux titrimetric method is well documented[4] and well accepted by international standards ; method 5220 C approved by United States Environmental Protection Agency – USEPA
Purpose of the data	Calculation of baseline and project emissions
Calculation method	-
Comments	The adjusting of monitored values is explained in section 2.2.2 – Deviation 2.

Data / Parameter	$COD_{y,ww,treated,CL2}$
Data unit	mg/l
Description	COD of wastewater exiting the covered lagoon 2 treatment process : CS4
Source of data	Measured – Titrimetric analysis
Description of measurement methods and procedures to be applied	**Monitoring:** Closed reflux titrimetric method in the onsite laboratory of the treatment plant. Sample will be taken from the outlet of CL2 before entering the open lagoons. **Data type:** Records in both hard and soft files.

[4] The *Examination of water and wastewater" , 1st Ed 2005 and Wastewater analysis manual from Environmental Engineering Association , Thailand , 3rd Ed. 1997*

	Responsibility: The result is logged by the operator in the plant operation report.
Frequency of monitoring/recording	**Frequency:** Daily basis **Recording :** Daily records
Value monitored:	01/09/13 to 31/12/13 — 2,804 01/01/14 to 31/12/14 — 3,670 01/01/15 to 31/12/15 — 5,116 01/01/16 to 11/05/16 — 9,711
Monitoring equipment	-
QA/QC procedures to be applied	• In case the COD value is not available for a particular day, the same shall be estimated in a conservative manner (as per deviation 2 of section 2.2) or ignored out of emission reduction estimation. • The closed reflux titrimetric method is well documented[5] and well accepted by international standards ; method 5220 C approved by United States Environmental Protection Agency – USEPA
Purpose of the data	Calculation of project emissions
Calculation method	-
Comments	The adjusting of monitored values is explained in section 2.2.2 - Deviation 2.

Data / Parameter	$COD_{y,ww,treated,CL3}$
Data unit	mg/l
Description	COD of wastewater exiting the covered lagoon 3 treatment process : CS5
Source of data	Measured – Titrimetric analysis
Description of measurement methods and procedures to be applied	The monitoring of this parameter is in line with deviation 1 in section 2.2.2 above. **Monitoring:** Closed reflux titrimetric method in the onsite laboratory of the treatment plant. Sample will be taken from the outlet of CL3. **Data type:** Records in both hard and soft files. **Responsibility:** The result is logged by the operator in the plant operation report.

[5] The *Examination of water and wastewater" , 1st Ed 2005 and Wastewater analysis manual from Environmental Engineering Association , Thailand , 3rd Ed. 1997*

Frequency of monitoring/recording	**Frequency:** Daily basis **Recording :** Daily records
Value monitored:	01/09/13 to 31/12/13: 21,731 01/01/14 to 31/12/14: 25,529 01/01/15 to 31/12/15: 34,832 01/01/16 to 11/05/16: 52,436
Monitoring equipment	-
QA/QC procedures to be applied	• In case the COD value is not available for a particular day, the same shall be estimated in a conservative manner (as per deviation 2 of section 2.2) or ignored out of emission reduction estimation. • The closed reflux titrimetric method is well documented[6] and well accepted by international standards ; method 5220 C approved by United States Environmental Protection Agency – USEPA
Purpose of the data	Calculation of project emissions
Calculation method	-
Comments	The adjusting of monitored values is explained in section 2.2.2 - Deviation 2.

Data / Parameter	W_{CH4}
Data unit	%
Description	Methane content in biogas
Source of data	Measured by inline gas analyzer
Description of measurement methods and procedures to be applied	**Monitoring:** Online methane analyzer **Data type:** Records in both hard and soft files
Frequency of monitoring/recording	**Frequency:** Continuous measurement **Recording:** Daily records. **Responsibility:** The result is logged and printed out by the operator.

[6] The *Examination of water and wastewater" , 1st Ed 2005 and Wastewater analysis manual from Environmental Engineering Association , Thailand , 3rd Ed. 1997*

Value monitored:	
	01/09/13 to 31/12/13 — 53.53 01/01/14 to 31/12/14 — 54.16 01/01/15 to 31/12/15 — 54.08 01/01/16 to 11/05/16 — 52.87
Monitoring equipment	
	Meter name: MS01 Serial Number: 1090 3240 2610 0000 0019 Brand: Wuhan Model: Gasboard-3200 Accuracy: 2% Calibration Frequency: 1 / 3 years Calibration Date: 10/01/12, 10/01/14
	Meter name: MS01 Serial Number: 96159 Brand: UNION Model: INCA 4002 T099-01 Accuracy: 1% Calibration Frequency: 1 / 3 years Calibration Date: 10/03/16, 14/03/17
QA/QC procedures to be applied	Periodic calibrations (generally once in three year) for methane analyser are ensured via an external agency according to national or international standard.
Purpose of the data	Calculation of project emissions
Calculation method	-
Comments	-

Data / Parameter	$BG_{combusted,y}$
Data unit	Nm^3
Description	Amount of biogas combusted for gainful use in the year y
Source of data	Measured - Biogas flow meters : GM1,GM2

Description of measurement methods and procedures to be applied	Measurements of volume of biogas sent to boilers are done continuously using gas flow meters. The gas flow meters are installed and values recorded regularly by skilled employees. In recording this parameter, plant's operators shall first manually archive the monitored data onto log sheets then transfer to the computer for electronic storage.
Frequency of monitoring/recording	The data achievement is done on a daily basis.
Value monitored:	

01/09/13 to 31/12/13	3,469,077
01/01/14 to 31/12/14	8,402,494
01/01/15 to 31/12/15	8,525,960
01/01/16 to 11/05/16	3,042,455

Monitoring equipment

Meter name	GM1
Serial Number	301123
Brand	FCI
Model	ST51
Accuracy	2%
Calibration Frequency	1 / 3 years
Calibration Date	13/03/12 29/02/16

Meter name	GM1
Serial Number	630166
Brand	FCI
Model	ST51
Accuracy	2%
Calibration Frequency	1 / 3 years
Calibration Date	20/12/17

Meter name	GM2
Serial Number	301122
Brand	FCI
Model	ST51
Accuracy	2%
Calibration Frequency	1 / 3 years

	Calibration Date: 13/03/12, 08/05/15 Meter name: GM2 Serial Number: 503208 Brand: FCI Model: ST51 Accuracy: 2% Calibration Frequency: 1 / 3 years Calibration Date: 20/12/17
QA/QC procedures to be applied	The gas flow meter shall be subjected to periodic calibration once in three years according to the equipment's specifications and applicable industrial standards.
Purpose of the data	Calculation of baseline emissions
Calculation method	-
Comments	Due to the delay of calibration of GM1 and GM2 , the monitored values are deducted by 2% for conservativeness as per the latest version of CDM-EB65-A04-STAN : CDM validation and verification standard.

Data / Parameter	EC_y
Data unit	MWh
Description	Electricity consumption by wastewater treatment system and biogas plant in year y
Source of data	Maximum rated consumption is calculated by multiplying total electrical capacity with 8,760 hours and 10% additional factor to be conservative.
Description of measurement methods and procedures to be applied	Calculation based on maximum rated consumption is conducted in a conservative manner (as per paragraph 35 in AMS III. H., version 13).
Frequency of monitoring/recording	-
Value monitored:	01/09/13 to 31/12/13: 789 01/01/14 to 31/12/14: 2,361 01/01/15 to 31/12/15: 2,361 01/01/16 to 11/05/16: 854
Monitoring equipment	-

QA/QC procedures to be applied	In the absence of electric meter for the electricity consumption of project activity, maximum rated consumption shall be used to calculate the emissions from $PE_{power,y}$. Since this approach has taken into account the distribution losses of 10% and the calculation is based on an assumption that the electrical appliances will be running at full capacity for 8,760 hours per year, the QA/QC aspect has already been assured.
Purpose of the data	Calculation of project emissions
Calculation method	-
Comments	-

3.3 Monitoring Plan

1. Monitoring management

The project will hire people to operate the biogas generation and utilization plants. The required monitoring equipment are installed by the technology provider who are in consultation with the equipment suppliers and under the supervision of the managing director as well as the Environmental Officer and Consulting. Flow meters are to be calibrated generally on once in three year basis using recognized procedures and sampling is carried out by onsite staffs according to appropriate industrial standards.

Data acquisition from the gas and wastewater flow meters are executed through log- book system and record by on-site operators, while COD of wastewater at sampling point is daily monitored and reported by on-site environmental laboratory.

The collected data must be approved and supervised by the Environmental Officer who is in charge of data processing.

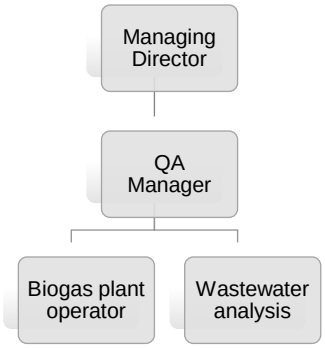

Figure 4 : Organization Chart

2. Quality Assurance and Quality Control

The Environmental Officer monitors overall performance of the plant, ensures proper and timely calibration, data acquisition and storage.

3. On-site procedures

Plant performance is recorded daily in log sheets and later stored in electronic format for periodic download onsite or remote transfer for further processing. In terms of procedures for calibration of equipment, the Environmental Officer will contact the third party to carry out calibration according to international standards. Note that the Environmental Officer is responsible for executing timely calibration as per the specification from the equipment supplier or at least once in three years.

4. Data storage and filing – Electric Workbook

All relevant data is stored electronically in computer. A daily record is kept. All parameters monitored under the monitoring plan are kept for a period of two years following the end of the crediting period or the last issuance of VERs for the project activity, whichever occurs later.

5. Emergency preparedness

The project activity does not result in any unidentified activity that can result in substantial emissions from the project activity.

However, the leakages, if any, in the piping or digester shall come under notice of plant operator either during regular monitoring of data parameters, else at the time of data logging, due to mismatch between expected biogas generation from wastewater quantities processed or other way around.

4 QUANTIFICATION OF GHG EMISSION REDUCTIONS AND REMOVALS

4.1 Baseline Emissions

Baseline emissions for AMS III.H

$$BE_y = BE_{power,y} + BE_{ww,treatment,y} + BE_{s,treatment,y} + BE_{ww,discharge,y} + BE_{s,final,y}$$

(Equation 1)

Where :

BE_y	Baseline emission in year y (tCO_2e)
$BE_{power,y}$	Baseline emission from electricity or fuel consumption in year y (tCO_2e)
$BE_{ww,treatment,y}$	Baseline emission of the wastewater systems affected by the project activity in year y (tCO_2e)
$BE_{s,treatment,y}$	Baseline emissions of the sludge treatment systems affected by the project activity in year y (tCO_2e)
$BE_{ww,discharge,y}$	Baseline methane emissions from degradable organic carbon in treated wastewater discharged into sea/river/lake in year y (tCO_2e). The value of this term is zero for the case 1 (ii)
$BE_{s,final,y}$	Baseline methane emissions from anaerobic decay of the final sludge produced in year y (tCO_2e). If the sludge is controlled combusted , disposed in a landfill with biogas recovery , or used for soil application in the baseline scenarios , this term shall be neglected.

Table 2 : Summary of Baseline Emission calculation

AMS III. H.				
Parameter	**2013**	**2014**	**2015**	**2016 (upto 11-May)**
$BE_{ww,\ treatment,}$	30,712	62,395	144,243	64,174
$BE_{power,\ y}$	0	0	0	0
$BE_{elec,\ y}$	0	0	0	0
$BE_{s,\ treatment,\ y}$	0	0	0	0
$BE_{ww,\ discharge,}$	0	0	0	0
$BE_{s,\ final,\ y}$	0	0	0	0
$BE_{y,\ ex\ post}$	***30,711***	***62,395***	***144,243***	***64,174***
MD_{y}	***33,239***	***81,461***	***82,529***	***28,791***

4.2 Project Emissions

Project activity emissions from the systems affected by the project activity are:

$$PE_y = \begin{Bmatrix} PE_{power,y} + PE_{ww,treatment,y} + PE_{s,treatment,y} + PE_{y,ww,discharge,} + PE_{s,final,y} \\ +PE_{fugitive,y} + PE_{biomass,y} + PE_{flaring,y} \end{Bmatrix}$$

(Equation 4)

Where :

PE_y	Project activity emission in year y (tCO_2e)
$PE_{power,y}$	Emission from electricity or fuel consumption in year y (tCO_2e)
$PE_{ww,treatment,y}$	Methane emission from the wastewater systems affected by the project activity and not equipped with biogas recovery , in year y (tCO_2e)
$PE_{s,treatment\ ,y}$	Methane emissions from sludge treatment systems affected by the project activity and not equipped with biogas recovery ,in year y (tCO_2e)
$PE_{y,www,discharge}$	Methane emissions from degradable organic carbon in treated wastewater in year y (tCO_2e).
$PE_{s,final,y}$	Methane emissions from anaerobic decay of the final sludge produced in year y (tCO_2e).
$PE_{fugitive,y}$	Methane emissions from biogas release in capture systems in year y (tCO_2e).
$PE_{flaring,y}$	Methane emissions due to incomplete flaring in year y (tCO_2e).
$PE_{biomass,y}$	Methane emissions from biomass stored under anaerobic conditions in year y (tCO_2e).

Table 3 : Summary of Project Emission calculation

Parameter	2013	2014	2015	2016 (upto 11-May)
$PE_{power, y}$	399	1,194	1,194	432
$PE_{ww, treatment,}$	8,472	18,339	53,094	34,664
$PE_{s, treatment, y}$	0	0	0	0
$PE_{ww, discharge, y}$	0	0	0	0
$PE_{s, final, y}$	0	0	0	0
$PE_{fugitive, y}$	2,792	5,629	11,983	4,042
$PE_{fugitive, s, y}$	*0*	*0*	*0*	*0*
$PE_{fugitive, ww, y}$	*2,792*	*5,629*	*11,983*	*4,042*
$PE_{flaring, y}$	0	0	0	0
$PE_{biomass, y}$	0	0	0	0
$PE_{y, ex\ post}$	***11,663***	***25,163***	***66,272***	***39,138***

4.3 Leakage

The used technology is not equipment transferred from another activity, therefore according to the AMS.III.H, there is no leakage to be considered.

4.4 Net GHG Emission Reductions and Removals

$$ER_{y,ex\ post} = \min((BE_{y,ex\ post} - PE_{y,ex\ post} - LE_{y,ex\ post}), (MD_y - PE_{biomass,y} - LE_{y,ex\ post}))$$

(Equation 13)

Where :

$ER_{y,expost}$	Emission reductions achieved by the project activity based on monitored values for year y (tCO_2e)
$BE_{y,expost}$	Baseline emission calculated as per paragraph ex-post monitored values
$PE_{y,expost}$	Project emission calculated as per paragraph ex-post monitored values
MD_y	Methane captured and destroyed/gainfully used by the project activity in year y

<u>Justification for the increasing of emission reductions in this monitoring period</u>

The increasing of emission reduction in this monitoring period, comparing to the estimated value of 36,973 tCO_2e annually , is mainly from the higher amount of wastewater discharged from sweetener and ethanol plant

Year	Baseline emissions or removals (tCO_2e)	Project emissions or removals (tCO_2e)	Leakage emissions (tCO_2e)	Net GHG emission reductions or removals (tCO_2e)
Year 2013	30,711	11,663	0	19,048
Year 2014	62,395	25,163	0	37,232
Year 2015	144,243	66,272	0	77,971
Year 2016-1	64,174	39,138	0	25,036
Total	301,523	142,236	0	159,287

During the VCS review of the project for the monitoring period 01/09/13– 11/05/16, assessment finding was raised on 18/07/2016 and closed on 12/10/2016. The conclusion of the assessment finding required that the project deduct 6,861 tCO2e from the subsequent monitoring period. In line with the same, 6,861 tCO2e are deducted from this monitoring period and the revised table with the final emission reductions is presented below:

Year	Net GHG emission reductions or removals (tCO_2e)
Year 2013	*12,187*
Year 2014	37,232
Year 2015	77,971
Year 2016-1	25,036
Total	152,426

APPENDIX 1 : ADDITIONAL INFORMATION

Table 4 : Summary of monitored and calculated parameters

Parameter	Unit	PD	2013	2014	2015	2016 (upto 11-May)
$Q_{y,ww,starch}$	m^3	630,000	0	606,941	787,850	212,566
$Q_{y,ww,sweetener}$	m^3	72,000	431,457	114,603	892,911	383,936
$Q_{y,ww,Ethanol}$	m^3	279,000	179,862	368,935	565,904	140,027
$Q_{y,ww}$	m^3	981,000	611,319	1,090,479	2,246,665	736,528
$COD_{y,ww,untreated,starch}$	mg/l	17,725	15,576	11,953	14,921	23,880
$COD_{y,ww,untreated,sweete}$	mg/l	12,200	11,124	8,609	10,546	16,832
$COD_{y,ww,untreated,ethanc}$	mg/l	50,000	22,963	26,282	35,940	51,889
$COD_{y,ww,treated,CL2}$	mg/l	1,073	2,804	3,670	5,116	9,711
$COD_{y,ww,treated,CL3}$	mg/l	15,000	21,731	25,529	34,832	52,436
$COD_{y,ww,treated,lagoon}$	mg/l		245	272	307	487
$COD_{y,ww,untreated}$	ton/y		8,319	17,057	39,525	17,213
$COD_{load,out,CL2}$	ton/y		2,048	4,412	12,608	8,134
$COD_{load,out,lagoon}$	ton/y		145	293	682	348
$MEP_{ww,treatment,y}$			1,117	2,252	4,793	1,617
W_{CH4}	%		53.53%	54.16%	54.08%	52.87%
$BG_{to\ Starch,\ y}$	Nm^3		2,138,097	4,692,142	4,759,632	1,540,099
$BG_{to\ Turbine,\ y}$	Nm^3		1,330,979	3,710,352	3,766,328	1,502,356
$BG_{combusted,\ y}$	Nm^3		3,469,077	8,402,494	8,525,960	3,042,455
EC_y	MWh	2,016	789	2,361	2,361	854

Table 5 : Information of monitoring equipment

Meter	Location	Brand	Model	Accuracy	S/N	Calibration Date					Period of use		Error applied
						2012	2014	2015	2016	2017	Installation	Remove	
FM1	strach	ABB	FEV11	0.4%	3K220000021352	10-Mar-12		6-May-15					2015
FM2	sweet	ABB	FEV11	0.4%	3K220000021353	10-Mar-12		6-May-15				26-Dec-17	2015
		Rosemount	M4Q4	0.35%	6201472					26-Dec-17	26-Dec-17		
FM3	ethanol	Yokogawa	AFX1500	0.35%	S5G802553 736	29-Mar-12		6-May-15					2015
GM1	starch	FCI	ST51	2%	301123	13-Mar-12			29-Feb-16			20-Dec-17	2015 - 2016(1)
		FCI	ST51	2%	503208					20-Dec-17	20-Dec-17		
GM2	turbine	FCI	ST51	2%	301122	13-Mar-12		8-May-15				20-Dec-17	2015
		FCI	ST51	2.0%	630166					20-Dec-17	20-Dec-17		
MS 01	biogas	Wuhan	Gasboard-3200	2%	1090 3240 2610 0000 0019	10-Jan-12	10-Jan-14						
MS 02	biogas	UNION	INCA 4002 T099-01	1%	96159				10-Mar-16	14-Mar-17			